Fermilab

Revision 1.0

1/21/1999

Particle Physics Division

*Engineering and Technical Teams*

# Mechanical Support Engineering Note

Number: MD-ENG-02/010

Date: June 14, 2002

Project: PPD area cleanups

Project Internal Reference:

Title: Design of Lifting system for 15 Foot Bubble Chamber

Author(s): J. Kilmer

Reviewer(s): Harry F. Carter, 3236
HARRY F. CARTER

Key Words:

Abstract/Summary: This note describes the engineering necessary to construct a set of beams to allow lifting the entire 15 Foot Bubble Chamber as a unit in one lift.

Applicable Codes:

| FERMILAB ENGINEERING NOTE | SECTION | PROJECT | SERIAL-CATEGORY | PAGE |
|---|---|---|---|---|
| | | | | 1 |

| SUBJECT | NAME | |
|---|---|---|
| | DATE | REVISION DATE |

WEIGHT OF VACUUM TANK

$A_t = \pi d^2$

$= \pi (264 in)^2$

$= 218956 in^2$

$d = 22' \times 12''/' = 264 in$

$V = A_t \times t$

$= (218956 in^2)(.5 in)$

$= 109478 in^3$

$Wt = V \times density$

$= (109478 in^3)(.283 lb/in^3)$

$= 30982 lbs$

NEED TO ADD CONE AND STRAIGHT SECTION

CONE IS ~ 1" THICK AND 5' ~~DIAMETER~~ RADIUS ALONG THE CONE LENGTH

$V = \frac{\pi}{4} d^2 t = \frac{\pi}{4}(56" \times 2)^2 (1")$

$= 9852 in^3$

$Wt = V \times \rho = (9852 in^3)(.283 lb/in^3)$

$= 2788 lbs$

SLEEVE $r = 56"$ $h \approx 5' = 60 in$ $t = 1"$

$V = 2\pi r h t$

$= 2\pi (56")(60 in)(1 in)$

$= 21,111 in^3$

$wt = (21,111 in^3)(.283 lb/in^3)$

$= 5974 lbs$

TOTAL VACUUM TANK = 30982 + 2788 lbs + 5974 lbs = 39744 lbs

MATCHES CLOSELY WITH NUMBERS REMEMBERED

ADD 50% TO COVER LEGS, CAMERAS, FLANGES ⇒ USE 60,000 lbs.

| FERMILAB ENGINEERING NOTE | SECTION | PROJECT | SERIAL-CATEGORY | PAGE 2 |
|---|---|---|---|---|
| SUBJECT | NAME | | | |
| | DATE | REVISION DATE | | |

WT OF CHAMBER

FROM 2621.ME-25172 BARE CHAMBER VESSEL = 32,800 lbs.

PISTON WEIGHT = 3000 lbs

Z SECTION WEIGHT = 10,000 lbs

NOSE CONE WEIGHT = 1000 lbs

TOTAL 46,800 lbs

CLOSE TO REMEMBERED NUMBER OF 40,000 lbs

⇒ USE 60,000 lbs.

NOW CALCULATE MOMENTS FOR BEAMS.

FOR VAC TANK USE $P = \frac{60,000 \text{ lbs}}{4}$ $\ell = 4 \text{ in}$

$M = P\ell = (60,000 \text{ lbs})(4 \text{ in})$

$= 240,000 \text{ lb-in}$

ASSUME THAT WE USE A36 MTL AND FACTOR OF 3 ON YIELD BECAUSE IT IS A "LIFTING FIXTURE."

$$\sigma = \frac{Mc}{I} \Rightarrow \frac{I}{c} = \frac{M}{\sigma} = \frac{240,000 \text{ lb-in}}{12,000 \text{ lb/in}^2}$$

$$= 20 \text{ in}^3 \Rightarrow \text{ACTUALLY} \sim 5 \text{ in}^3$$

$\Rightarrow$ THE LIGHTEST W8 BEAM DIMENSIONS WOULD WORK HERE.

NOW LOOK AT CHAMBER

$P = \frac{60000 \text{ lbs}}{4}$ $\ell = 36''$

$= 15,000 \text{ lbs}$

$M = P \cdot \ell$

$= (15000 \text{ lbs})(36 \text{ in})$

$= 540,000 \text{ lb in}$

$$\frac{I}{c} = \frac{M}{\sigma} = \frac{540,000 \text{ lb-in}}{12,000 \text{ lb/in}^2}$$

$$= 45 \text{ in}^3$$

THIS COULD STILL BE MET BY A HEAVIER W8 BEAM.

NOTE THAT THE MOMENT DOES NOT CHANGE FROM MAGNET TO VAC. TANK BUT MAG. TO CHAMBER DOES (BECAUSE OF BEAMY HEAD) AND THIS IS THE MAXIMUM

MOMENT REQUIRED.

A W8 X58 WOULD WORK. $\therefore t_w = 1/2''$ AND $t_f = .810$.

CAN USE 1" THICK PLATE FOR FLANGES AND 1/2" THICK PLATE FOR WEBS. NEED TO PUT IN 4 BEAMS AT 90° INTERVALS ROUGHLY ON N, S, E, W DIRECTIONS.

ALSO NEED TO RESTRAIN THE BOTTOM SO IT DOESN'T MOVE LIKE A BELL CLAPPER. PUT IN 1" PLATES FROM MAGNET TO VAC TANK AND CHAMBER TO TIE THEM TOGETHER FROM BELOW. DON'T RELY ON THE VACUUM TANK BECAUSE BELLOWS ARE NOT STIFF ENOUGH. DO NOT ASSUME THAT THESE RESTRAINTS WILL CARRY ANY WEIGHT.

CHECK BEAMS FOR WEB CRIPPLING. (SITTING ON MAGNET.

LOAD IS $2 \times \frac{60{,}000\,lb}{4} = 30{,}000\,lbs$

$t_w = 1/2''$ $\quad k = 1\tfrac{5}{16}'' = 1.3125''$

$N = 29''$ $\quad F_y = 36\,KSI$

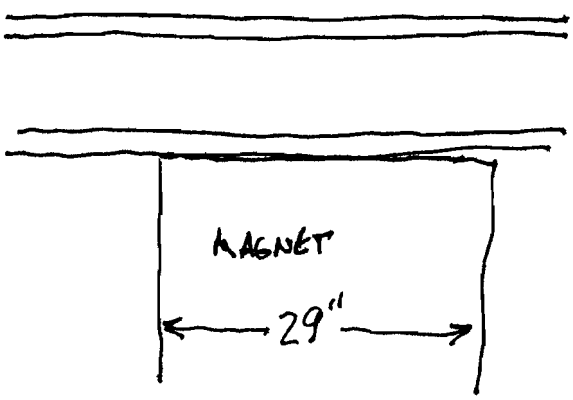


$$\frac{R}{t_w(N+5k)} = \frac{30000\,lbs}{(.5\,in)(29\,in + 5\times 1.3125\,in)} = 1687\,PSI$$ (K1-2)

(AISC, pg 5-81) $\quad \leq .66 F_y$

$\leq 23.76\,KSI$

$\therefore$ WEB CRIPPLING IS OK.

NOTE: ALSO OK AT $F_y/3 = 12000\,PSI$ LIMIT FOR LIFTING FIXTURE

CHECK WELDS ON JOINTS TO ~~MAGNE~~ VACUUM TANK OR CHAMBER.

WELD IS IN SHEAR. LOAD AT JOINT = 15,000 lbs $\left(\frac{60{,}000\,lbs}{4}\right)$

ASSUME E60XX ROD AND 1/4 EFFICIENCY. THEN WELD AREA REQUIRED IS

$$A = \frac{15{,}000\,lbs}{15{,}000\,PSI} = 1\,in^2$$

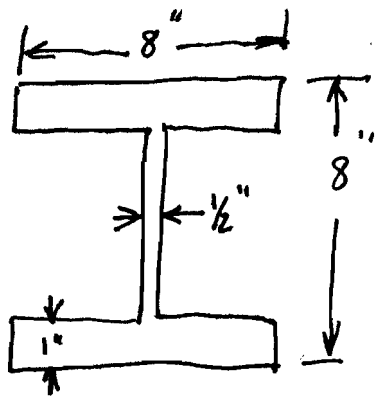


WELD ALL AROUND BEAM AND JUST TAKE PROJECTION THEN TOTAL L OF WELD IS ~ 8" X 4 = 32"

USE 1/4" FILLET WELD.

$$t_t = \frac{.25''}{1.414} = .177\,in.$$

$$A_w = L \times t_t = 32\,in \times .177\,in^2$$

$$= 5.6\,in^2 > 1''^2 \text{ REQUIRED}$$

⇒ WELDS DONE THIS WAY ARE FINE.

LOOK AT WELD TO ATTACH FLANGES TO WEB.
FOR CANTILEVER BEAMS SHEAR (V) = LOAD

∴ SHEAR LOAD = 15,000 lbs

THEN ASSUME A 1/4" FILLET WELD ON EACH SIDE OF WEB.

THEN FIND STRESS FROM

$$S_s = \frac{VQ}{Ib}$$

WHERE

$S_s$ = SHEARING STRESS
$V$ = SHEAR FORCE (VERTICAL)
$Q = A\bar{y}$ STATIC MOMENT ABOVE OR BELOW THE CUT.
$I$ = MOMENT OF INERTIA OF WHOLE BEAM
$b$ = WIDTH OF SECTION CUT

FROM ("STRENGTH OF MATERIALS" by FITZGERALD, ADDISON WESLEY, 1967, Pg 107)

FIRST FIND I

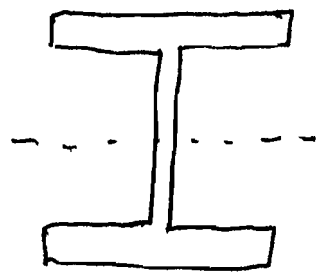


| | b | h | $I_o = \frac{1}{12}bh^3$ | A | d | $Ad^2$ | I |
|---|---|---|---|---|---|---|---|
| 1 | 8 | 1 | .66 | 8 | 3.5 | 98 | 98.66 |
| 2 | .5 | 6 | 9 | 3 | 0 | 0 | 9 |
| 3 | 8 | 1 | .66 | 8 | 3.5 | 98 | 98.66 |

$I_t = 206.32\ in^4$

NOW FIND SHEARING STRESS AT JOINT BETWEEN 1 AND 2

$$S_s = \frac{VQ}{Ib} = \frac{(15{,}000\,lbs)(28\,in^2)}{(206.32\,in^4)(.354\,in)}$$

$= 5750$

$\ni$ OK.

$V = 15{,}000\,lbs$

$Q = A\bar{y} = Ad = 8 \times 3.5 = 28\,in^2$

$I = 206.32\,in^4$

b = distance BETWEEN TWO WELD THROATS (NOT SECTION WIDTH)

$\Rightarrow$ USE 1/4" WELD THROATS ONLY

ie $2 \times .177\,in = .354\,in$

NEED TO USE E60XX ROD MINIMUM EQUIV. AND PUT 1/4" FILLET WELDS

ON BOTH SIDES OF BEAM WEBS

AND WELD CONTINUOUSLY!

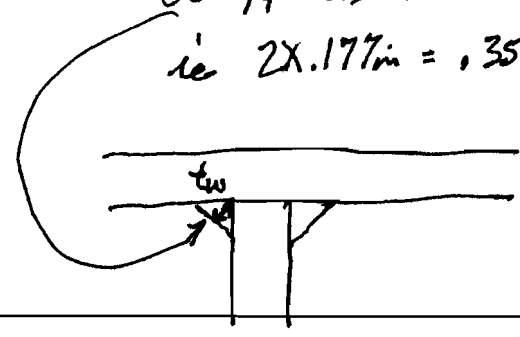

ALSO FOR WELDS NOTE THAT WE ARE WELDING A-36 PLATE TO 304SS. A WELD PROCEDURE TEST IS ATTACHED SHOWING THAT THESE WELDS CAN BE MADE TO >70,000 PSI ULTIMATE STRESS.

NEXT WE NEED TO INVESTIGATE HOW THE LIFT AFFECTS THE MAGNET VACUUM TANK. MODEL THE TOP AS A RECTANGULAR BEAM

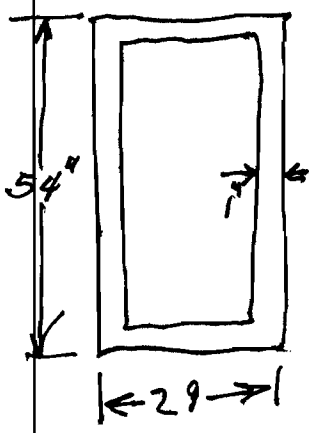


FROM ROARK'S FORMULAS FOR STRESS AND STRAIN 6th EDITION, pg 62

$$I_1 = \frac{b d^3 - b_i d_i^3}{12} \qquad b = 29'' \quad d = 54 in \quad b_i = 27'' \quad d_i = 52 in$$

$$= \frac{(29'')(54'')^3 - (27'')(52'')^3}{12}$$

$$= \frac{4{,}566{,}456 in^4 - 3{,}796{,}416 in^4}{12}$$

$$= 64170 in^4$$

ASSUME THAT THE SLINGS LIFTING CHAMBER ARE AROUND THE BOTTOM OF THIS BEAM IN A BASKET (NEED 3 SLINGS) AND THE LOAD OF THE CHAMBER AND VACUUM TANK ARE ON THE TOP

MODEL BENDING AS A STRAIGHT BEAM WITH CROSS SECTION SHOWN ABOVE
NOTE THAT THERE IS REALLY SOME ROTATION INVOLVED BUT SINCE THE BEAM FORMS A COMPLETE CIRCLE IT IS VERY STIFF FOR ROTATIONAL MODES.

CENTRAL DIAMETER OF COIL IS 15' 4"

$$C = \pi d = \pi (184 in) = 578 in$$

ASSUME THAT ONE OF THESE BEAMS CARRYING VACUUM TANK AND CHAMBER HITS IN CENTER OF 1/3 OF THIS CIRCUMFERENCE. THEN HAVE:

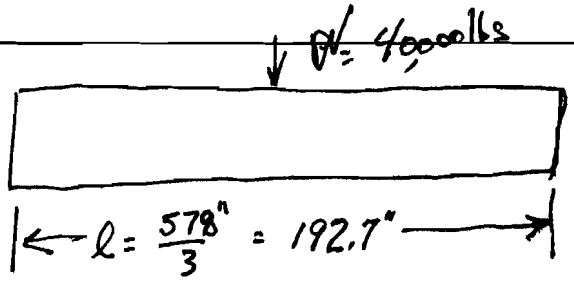


ASSUME BEAM IS STRAIGHT W/ SIMPLE SUPPORTS
FROM ROARK Case 1e, fig 101, 6th EDITION

$W = \frac{120000 \text{ lbs}}{3} = 40{,}000 \text{ lbs}$

$$M_{MAX} = \frac{Wl}{4} = \frac{(40000 \text{ lbs})(192.7 \text{ in})}{4}$$

$$= \cancel{7{,}706{,}666.}7 \text{ lb}$$
$$1{,}926{,}666.7 \text{ lbs-in}$$

$$\sigma = \frac{Mc}{I} = \frac{(1{,}926{,}666.7)(27 \text{ in}/2)}{64{,}170 \text{ in}^4}$$

$$= 405 \text{ PSI}$$

⇒ BENDING STRESS OF MAGNET VACUUM TANK OK AS A BEAM

ALLOWABLE WOULD BE ~ 18,750 PSI AND IT CAN SUPPORT VACUUM TANK AND CHAMBER

CONSIDER LOCAL WEB YIELDING FOR THIS BEAM
(AISC, K1-2)

$$\frac{R}{t_w(N+5k)} \leq .66F_y$$

FOR THIS BOX BEAM SECTION ASSUME
$R = 40{,}000$ lbs
$t_w = 1$ in
$N = 8$ in
$k \approx 1.5"$ (ASSUMES 1/2" WELD, PROBABLY IS LARGER)

$$\frac{40{,}000 \text{ lbs}}{1 \text{ in}[8 \text{ in} + 5(1.5 \text{ in})]} \leq .66(18{,}750 \text{ PSI})$$

$$2581 \text{ PSI} \leq 12{,}375 \text{ PSI}$$

⇒ BEAM IS OK

# PITTSBURGH TESTING LABORATORY

ESTABLISHED 1881

PITTSBURGH, PA.

AS A MUTUAL PROTECTION TO CLIENTS, THE PUBLIC AND OURSELVES, ALL REPORTS ARE SUBMITTED AS THE CONFIDENTIAL PROPERTY OF CLIENTS, AND AUTHORIZATION FOR PUBLICATION OF STATEMENTS, CONCLUSIONS OR EXTRACTS FROM OR REGARDING OUR REPORTS IS RESERVED PENDING OUR WRITTEN APPROVAL.

Order No. CH 5610

Date 4-20-82

PQR 820329

## PHYSICAL TEST REPORT OF WELDING PROCEDURE QUALIFICATION TESTS

COPY

Client: Fermi National Accelerator Laboratory
P.O. Box 500 Batavia, IL 60510

Specification No. ES 15.5004 — Date 4/15/82

Welding Process: GTAW — Manual or Machine: Manual

Material Specification: SA 312 to SA 53-B of Group No. P8 to Group No. P1

Thickness (if pipe, diameter and wall thickness): 6" IPS Sch 40

Thickness Range this test qualifies: 1/16" to 6-1/2

Filler Metal Classification: ER 309

Weld Metal Analysis No. A- 8 (ASME Sec. 9 only)

For oxyacetylene welding – State if Filler Metal is silicon or aluminum killed.

### Flux or Atmosphere

Flux Trade Name or Composition:

Inert Gas Composition: Argon 99.99%

Trade Name: Airco — Flow Rate: 15 CFH

Is Backing Strip used? No — Preheat Temp. Range: No

Postheat Treatment: No

Position: 6G

(For plate, flat, horizontal, vertical, or overhead; if vertical, state whether up or down, For pipe: Axis of pipe vertical, horizontal fixed, or horizontal rolled).

### Welding Procedure

Single or Multiple Pass: Multiple Pass

Single or Multiple Arc: Single Pass

– For Information Only –

Filler Wire – Diameter: 1/16 to 3/32

Trade Name: McKay

Type of Backing: Argon

### Welding Techniques

Joint Dimensions Accord with: V groove 37½, 3/32 gap 1/

amps 55/65 volts 10 inches per min. 2-4" 1

Above information by PTL ☐ Client ☒ Other

Preparation of specimens witnessed by PTL Yes ☐ No ☒

### Reduced Section Tensile Test

| Specimen No. | Dimensions - Inches | | Area Sq. In. | Ultimate Total Load, Lbs. | Ultimate Unit Stress, PSI | Character of Failure and Location |
|---|---|---|---|---|---|---|
| | Width | Thickness | | | | |
| 1 | 1.452 | .275 | .399 | 30700 | 76940 | PM |
| 2 | 1.445 | .279 | .403 | 30400 | 75430 | PM |

### Guided Bend Tests

| Type and Figure No. | Result | Type and Figure No. | Result |
|---|---|---|---|
| Face | Pass | Face | Pass |
| Root | Pass | Root | Pass |

Welder's Name: Walt Limbaugh — Clock No. 1012 — Stamp No. 3

Did the welder by virtue of these tests meet welder performance requirements? ☒ Yes ☐ No

Test witnessed by: James Forester — Test No. 10244

per: Client

Results of tests (do) (do not) meet requirements of: ASME Sec. IX

Machined and tested by PTL

By

Cc: Client

PITTSBURGH TESTING LABORATORY

By David A. Dunn

David A. Dunn, Chicago Manager

DISTRICT MANAGER

PITTSBURGH TESTING LABORATORY
ESTABLISHED 1891
PITTSBURGH, PA.

AS A MUTUAL PROTECTION TO CLIENTS, THE PUBLIC AND OURSELVES, ALL REPORTS ARE SUBMITTED AS THE CONFIDENTIAL PROPERTY OF CLIENTS, AND AUTHORIZATION FOR PUBLICATION OF STATEMENTS, CONCLUSIONS OR EXTRACTS FROM OR REGARDING OUR REPORTS IS RESERVED PENDING OUR WRITTEN APPROVAL.

Order No. CH 5610

Date 4-20-82

PQR 820329

# PHYSICAL TEST REPORT OF WELDING PROCEDURE QUALIFICATION TESTS

COPY

Client: Fermi National Accelerator Laboratory
P.O. Box 500 Batavia, IL 60510

Specification No. ES 155004 — Date 4/15/82

Welding Process: GTAW — Manual or Machine: Manual

Material Specification: SA 312 to SA 53-B of Group No. P8 to Group No. P1

Thickness (if pipe, diameter and wall thickness): 6" IPS Sch 40

Thickness Range this test qualifies: 1/16" to 2T 6-1/2

Filler Metal Classification: ER 309

Weld Metal Analysis No. A- 8 (ASME Sec. 9 only)

For oxyacetylene welding – State if Filler Metal is silicon or aluminum killed.

**Flux or Atmosphere**

Flux Trade Name or Composition:

Inert Gas Composition: Argon 99.99%

Trade Name: Airco — Flow Rate: 15 CFH

Is Backing Strip used? No — Preheat Temp. Range: No

Postheat Treatment: No

Position: 6G

(For plate, flat, horizontal, vertical, or overhead; if vertical, state whether up or down, For pipe: Axis of pipe vertical, horizontal fixed, or horizontal rolled).

**Welding Procedure**

Single or Multiple Pass: Multiple Pass

Single or Multiple Arc: Single Pass

– For Information Only –

Filler Wire – Diameter: 1/16 to 3/32

Trade Name: McKay

Type of Backing: Argon

**Welding Techniques**

Joint Dimensions Accord with: V groove 37½, 3/32 gap 1/

amps 55/65 volts 10 inches per min. 2-4" 1

Above information by PTL ☐ Client ☒ Other

Preparation of specimens witnessed by PTL Yes ☐ No ☒

**Reduced Section Tensile Test**

| Specimen No. | Dimensions-Inches Width | Dimensions-Inches Thickness | Area Sq. In. | Ultimate Total Load, Lbs. | Ultimate Unit Stress, PSI | Character of Failure and Location |
|---|---|---|---|---|---|---|
| 1 | 1.452 | .275 | .399 | 30700 | 76940 | PM |
| 2 | 1.445 | .279 | .403 | 30400 | 75430 | PM |

**Guided Bend Tests**

| Type and Figure No. | Result | Type and Figure No. | Result |
|---|---|---|---|
| Face | Pass | Face | Pass |
| Root | Pass | Root | Pass |

Welder's Name: Walt Limbaugh — Clock No. 1012 — Stamp No. 3

Did the welder by virtue of these tests meet welder performance requirements? ☒ Yes ☐ No

Test witnessed by: James Forester — Test No. 10244

per: Client

Results of tests (do) (do not) meet requirements of: ASME Sec. IX

Machined and tested by PTL

By: Client

PITTSBURGH TESTING LABORATORY

By: David A. Dunn

David A. Dunn, Chicago Manager
DISTRICT MANAGER

| REVISIONS | | | |
|---|---|---|---|
| SYM | DESCRIPTION | DRAWN / APPD. | DATE / DATE |

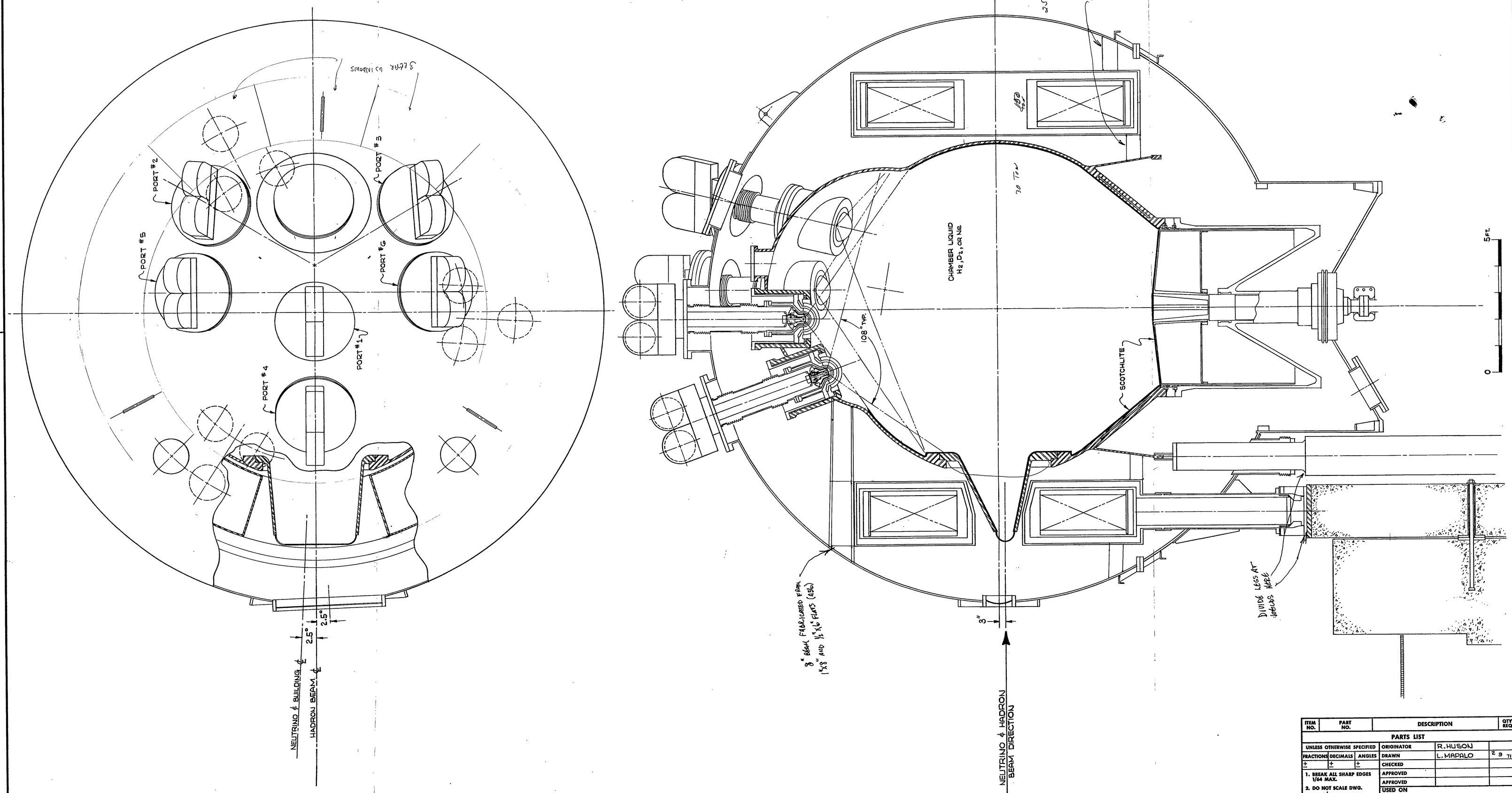


| ITEM NO. | PART NO. | DESCRIPTION | QTY. REQ. |
|---|---|---|---|
| | | PARTS LIST | |

| UNLESS OTHERWISE SPECIFIED | | | | | |
|---|---|---|---|---|---|
| FRACTIONS | DECIMALS | ANGLES | ORIGINATOR | R. HUSON | |
| ± | ± | ± | DRAWN | L. MAPALO | 2 9 71 |
| | | | CHECKED | | |
| 1. BREAK ALL SHARP EDGES 1/64 MAX. | | | APPROVED | | |
| 2. DO NOT SCALE DWG. | | | APPROVED | | |
| 3. DIMENSIONING IN ACCORD WITH USASI Y14.5 STD'S. | | | USED ON | | |
| √ MAX. ALL MACHINED SURFACES | | | MATERIAL- | | |

**NATIONAL ACCELERATOR LABORATORY**
**U.S. ATOMIC ENERGY COMMISSION**

30 K LITER HYDROGEN BUBBLE CHAMBER
GENERAL ASSEMBLY
ILLUSTRATION

| SCALE | FILMED | DRAWING NUMBER | REV. |
|---|---|---|---|
| 1/16" = 1" 3/4" = 1'-0" | | 2629-ME-25308 | |

| REV | DESCRIPTION | DRAWN | DATE |
|---|---|---|---|
| | | APPROVED | DATE |

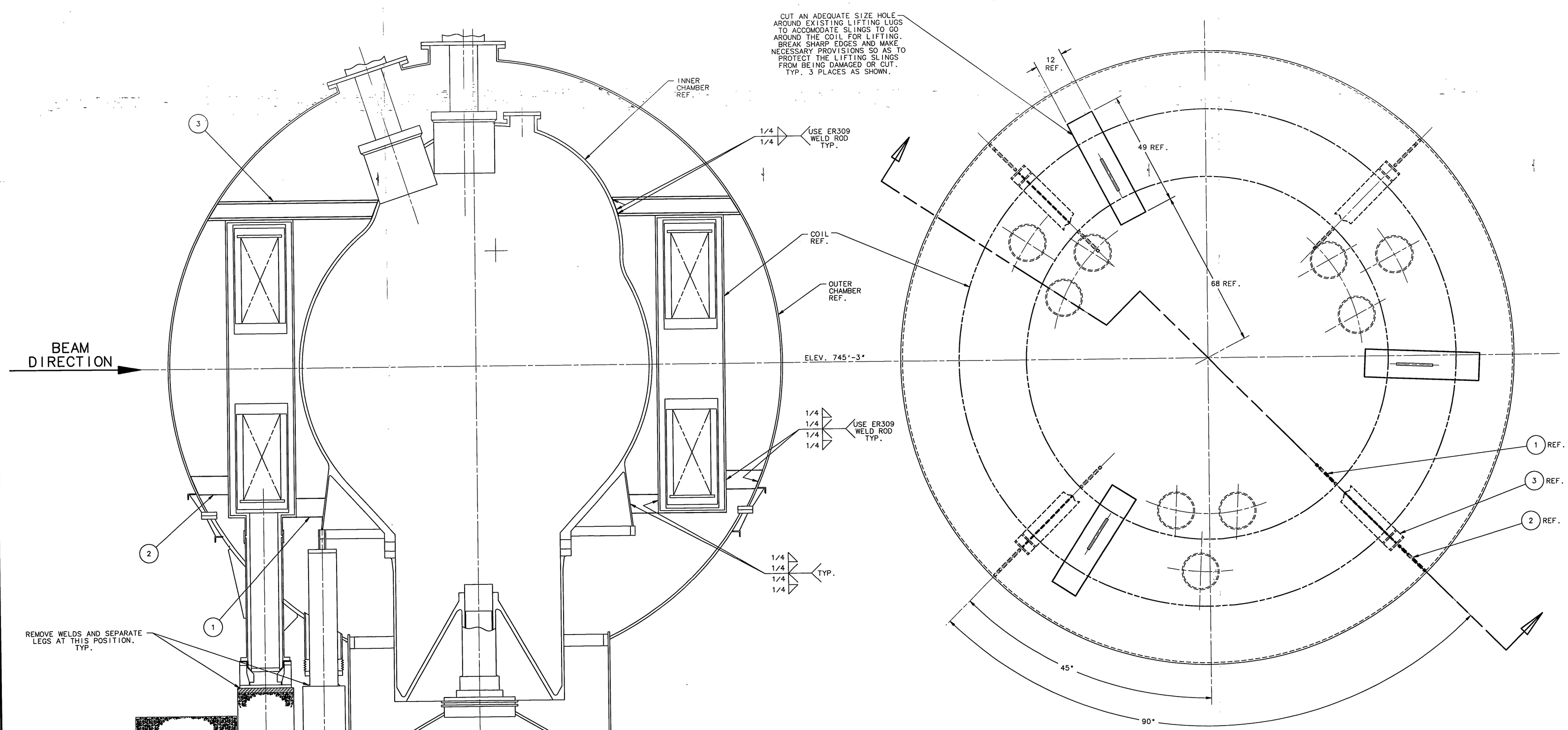


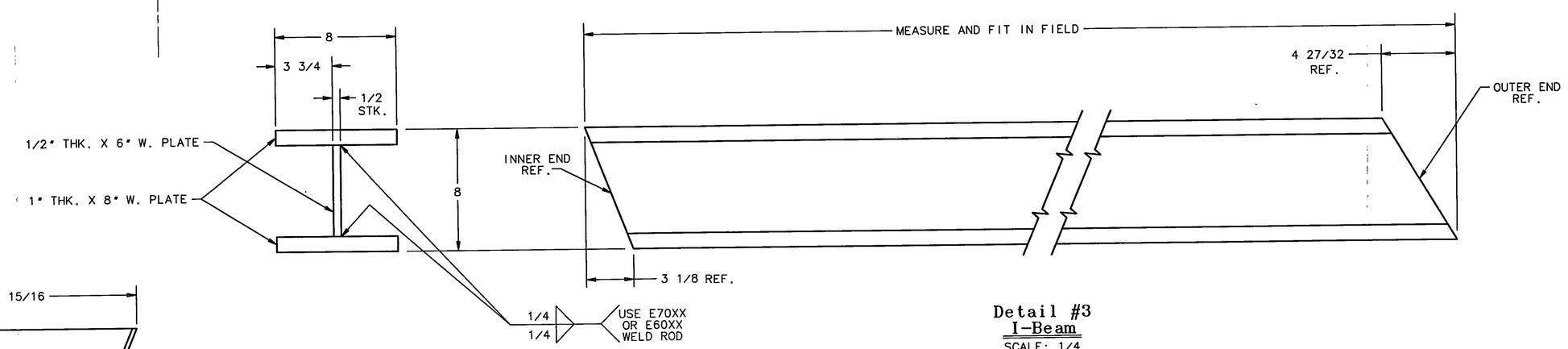


**Detail #3**
**I-Beam**
SCALE: 1/4
SEE NOTE #1

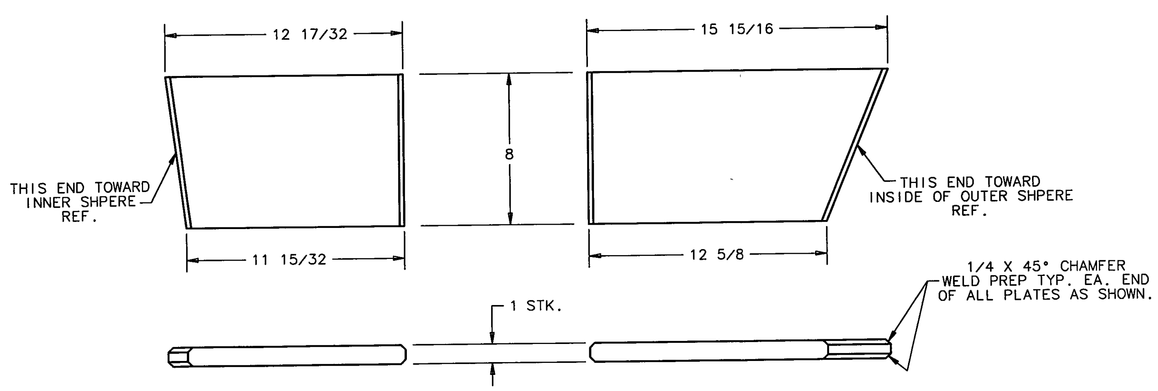


**Detail #1**
**Inner Plate**
SCALE: 1/4
SEE NOTE #1

**Detail #2**
**Outer Plate**
SCALE: 1/4
SEE NOTE #1

NOTES:

1. MATERIAL FOR ITEMS 1, 2 & 3 TO BE ASTM A36 H.R.S.
2. ITEMS #1, #2 AND #3 TO BE EQUALLY SPACED 90° AROUND THE CHAMBER AS SHOWN.
3. OVERALL LENGTHS OF ITEM #3 WILL VARY FROM APPROX. 55 5/8" TO APPROX. 73 1/4" LG. DUE TO THE SHAPE OF THE INNER CHAMBER.

| ITEM | PART NO. | DESCRIPTION OR SIZE | QTY. |
|---|---|---|---|
| 3 | DETAIL #3 | I-BEAM | 4 |
| 2 | DETAIL #2 | OUTER PLATE | 4 |
| 1 | DETAIL #1 | INNER PLATE | 4 |

PARTS LIST

| UNLESS OTHERWISE SPECIFIED | | | ORIGINATOR | |
|---|---|---|---|---|
| DECIMAL | FRACTION | ANGLES | DRAWN | |
| ± XX | ± 1/4 | ± 1° | CHECKED | |
| | | | APPROVED | |
| | | | USED ON | |
| | | | MATERIAL | |

1. BREAK ALL SHARP EDGES .015 MAX.
2. DO NOT SCALE DRAWING.
3. DIMENSIONS BASED UPON ANSI Y14.5M-1982
4. ALL DIMENSIONS ARE INCHES
5. MAX. ALL MACH. SURFACES 125

**FERMI NATIONAL ACCELERATOR LABORATORY**
**UNITED STATES DEPARTMENT OF ENERGY**

| SCALE | DRAWING NUMBER | SHEET | REV |
|---|---|---|---|
| | - - | 1 OF 1 | |