Fermilab

Particle Physics Division

Mechanical Department Engineering Note

Number: MD-Eng-298 Date: 12/21/10

Project: IRLABS CCD Testing Chamber

Project Internal Reference:

Title: IRLABS CCD Testing Chamber, Cryo Safety Review Documents

Author(s): Herman Cease

Reviewer(s):

Key Words: IRLabs

Abstract/Summary:

This engineering note contains the documents associated with the Cryo Safety Review of the IRLabs CCD testing chamber. The vessel is a commercial vessel for testing instruments. The vessel has an internal LN2 dewar for cooling the instrument. The dewar is filled by hand.

Applicable Codes: FESHM 5064, 5032

Fermilab

Particle Physics Division
Mechanical Department Engineering Note

Number: MD-ENG-276 Date: 9/28/10

Project Internal Reference:

Project: IRLabs CCD Testing Dewar

Title: IRLabs CCD Testing Dewar– Vacuum Window

Author(s): Herman Cease

Reviewer(s):

Key Words: Vacuum Window

Abstract Summary: The IRLabs CCD Testing Dewar is a vacuum vessel with a 100mm optical window. Optical vacuum windows do not apply to FESHM-**5033.1,** however the window analysis is still provided using the Brookhaven ES&H manual (Standards-Based Management System) engineering guidelines.

Applicable Codes:
Brookhaven: GUIDE FOR GLASS AND PLASTIC WINDOW DESIGN FOR PRESSURE VESSELS

Introduction

The IRLabs CCD Testing Dewar is used to test one CCDs. A desired vacuum pressure of 10e-6 Torr is required in the vessel to prevent water vapor from condensing onto the CCD during operation. Optical tests are performed on the CCD through an optical window that is purchased from JML Optical Industries, Rochester, NY and is a 4mm thick by 100mm diameter sapphire window. The window is held in a cell that is described by drawing #9213.750-MD-466719. The vessel positive pressure relief that is supplied by the vendor IRLabs was rated for 38 psig, and is replaced with a 1/3 psig Nupro relief on the vessel's 3/8NPT port.

Optical windows do not apply to FESHM Chapter 5033 Vacuum Window Safety. However, Brookhaven's Standards-Based Management System provides engineering guideline titled: GUIDE FOR GLASS AND PLASTIC WINDOW DESIGN FOR PRESSURE VESSELS.

Design:

Allowable Material Stress:
Due to possible stress concentrations and the brittleness of the material, the maximum allowable stress is a factor of 10 times less than the yield strength of the material. The window is constructed of Sapphire with a manufacturing allowable tensile stress of 40,000 psi, a Young's modulus of 50e6 psi. Reducing the yield strength by a factor of 10 gives a maximum allowable stress of 4,000 psi.

*Ref. http://www.roditi.com/SingleCrystal/Sapphire/Properties.html

Calculating the Window Stress and Deflection:
The window deflection is much smaller than 0.50 times the window thickness so the window is considered to be simply supported and thick plate theory is used. The design of the window mount shall be such that the window is not significantly constrained against thermal motions or motions under loading. The diameter of the window is taken to be the O-Ring diameter.

Using Appendix A of the Brookhaven document:
Stress = K1* Pressure * (diameter /thickness)^2
K1 = 0.296
Stress = 0.296 * 14.7 psid * (3.94 inch / 0.157 inch)^2
Stress = 2,740 psi

2,740 psi is less than the maximum allowable design stress of 4,000 psi

Using Appendix A of the Brookhaven document:
Deflection at the center of the window
= K3 * Pressure * diameter^4 / (modulus * thickness^3)
K3 = 0.051
Deflection = 0.051 * 14.7 psi * 3.94^4 / (50e6 psi * 0.157 inch^3)
Deflection = 0.00094 inch = 0.03 microns

Deflection is much less than 0.5 times the window thickness so thick plate theory is satisfied.

EXHIBIT A –Modified for Optical Window

Vacuum Window Engineering Note
(per Fermilab ES&H Manual Chapter 5033.1) –Modified for Optical Window

Vacuum Window Number: _____N/A_____

Purpose of vacuum vessel and vacuum window	IRLabs CCD Testing Dewar, Sapphire window	
Internal MAWP	14.7 PSI	
External MAWP	14.7 PSI	
Working Temperature Range	50 °F	100 °F

1. Design Verification: Provide design calculations in the Note Appendix.

2. Fabrication: Is this vacuum window fabricated in house? [ ] Yes [X] No
If "Yes", Attach the written fabrication procedure in the Note Appendix.

3. Inspection: Attach inspection reports and Travelers in the Note Appendix. Include date(s) of manufacture. Window will be inspected prior to use.

4. Testing: Attach failure and acceptance testing procedure and results in the Note Appendix. Include dates of testing

   Acceptance Testing performed using normal operational vacuum conditions. The Mechanical Engineer will be present during assembly and initial pump down of the vessel and window.

5. System Venting Verification:

   Is the relieving system of the vacuum vessel to which this vacuum window is attached sufficiently sized such that if the vessel is pressurized, the maximum differential pressure across the window cannot exceed the design differential pressure of the vacuum window?
   [X] Yes [ ] No

   1/3 psi NUPRO 3/8NPT relief.

6. Operating Procedure Section:

   Is an operating procedure necessary for the safe operation of this vessel? [ ] Yes [X] No

If "Yes", the operating procedure must be attached to the Note Appendix

7. Hazard Analysis: Is the safety factor on this vacuum window less than 2.0? [ ] Yes [X] No

If "Yes", a hazard analysis must be prepared and attached to the Note Appendix

8. Degradation from Exposure: Will the integrity of the window be compromised over time by exposure to radiation or cyclic stress? [ ] Yes [X] No
   If "Yes", include in the technical appendix any requirements for recording exposure, as well as a change-out schedule.

REV	DESCRIPTION	DRAWN / APPROVED	DATE
A	ADDED ITEMS #15 & #16	PAT POLL	08-MAR-2010
		HERMAN CEASE	08-MAR-2010
B	CHNGD DIM.: 13.35 WAS 13.72; ITEM 9 REVISED TO 2-270, WAS 271; ADDED ITEMS 17 & 18; REMOVED ITEMS 5, 10 & 11; GENERAL REVISION.	B.ELLISON	13-APR-10
		H.CEASE	13-MAY-10

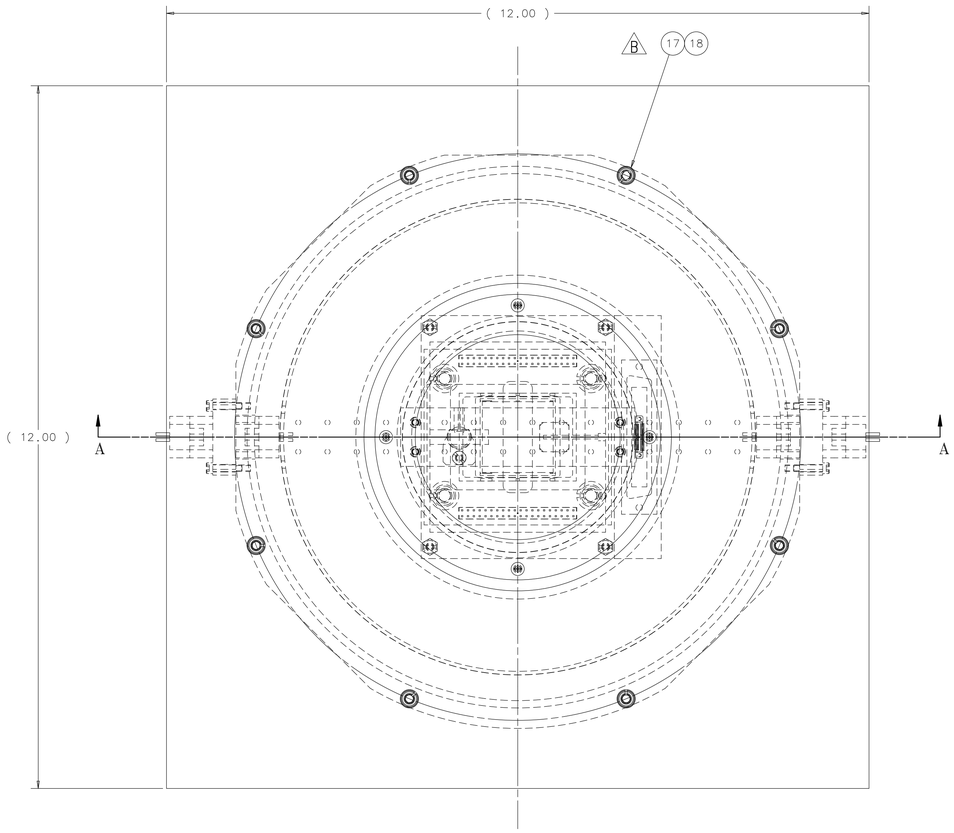

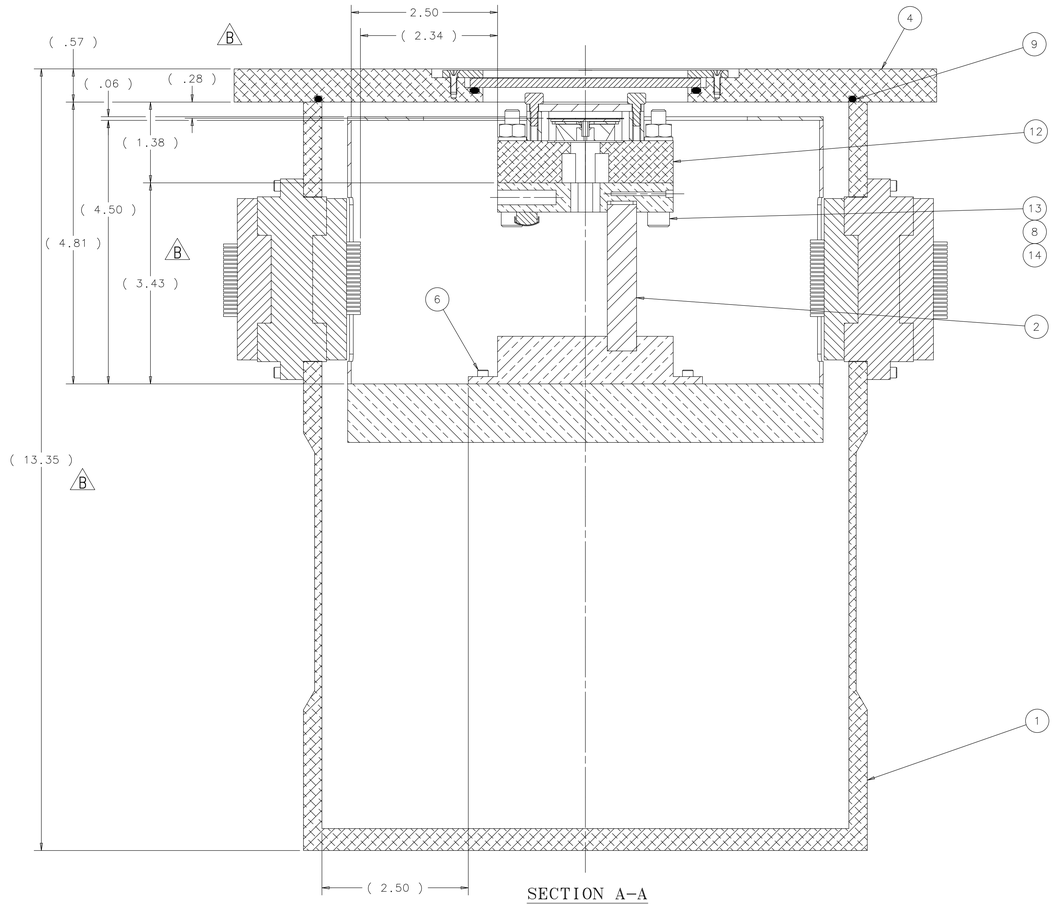

SECTION A-A

SHOWN WITH STORAGE BOX ASSEMBLY

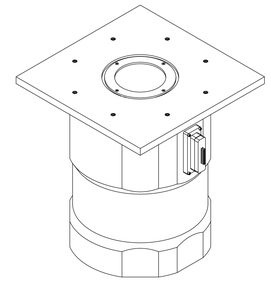

ISOMETRIC VIEW

SCALE= 1:2

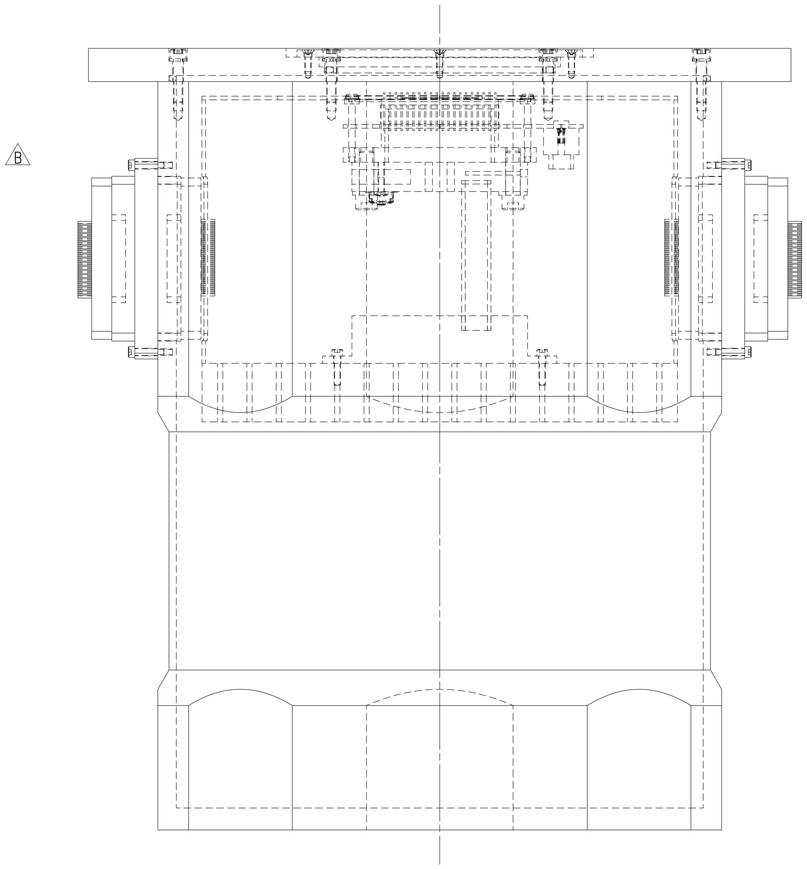

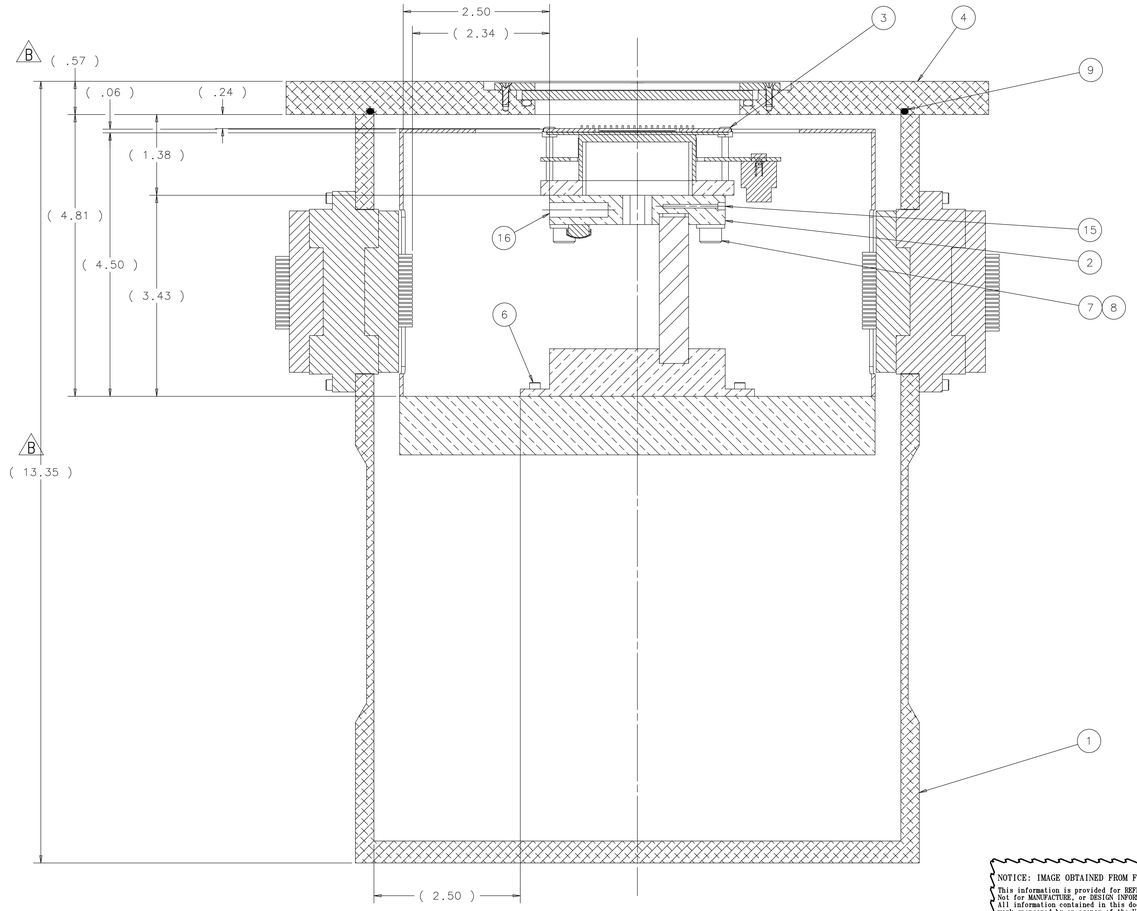

SECTION A-A

SHOWN WITH PICTURE FRAME ASSEMBLY

	ITEM	PART NO.	DESCRIPTION OR SIZE	QTY.
B	18	COM'L.	WASHER;LOCK;#8 SCREW; STN. STL. TYPE 18-8	8
B	17	COM'L.	SOCKET HEAD CAP SCREW;#8-32 UNC X 3/4 LG.; STN. STL. TYPE 18-8	8
	16	HTR-25-100	HEATER, LAKESHORE	1
	15	1PT100KN151CLA	RTD, SINGLE ELEMENT CERAMIC RTD, CLASS A; OMEGA	1
	14	COM'L.	HEX NUT;1/4-20 UNC; STN. STL. TYPE 18-8	4
	13	COM'L.	SOCKET HEAD CAP SCREW;1/4-20 UNC X 1-3/4 LG.; STN. STL. TYPE 18-8	4
	12	MC-436517	V21 FIXTURE MODULE STORAGE BOX	1
B				
B				
B	9	2-270	O-RING;9.25 O.D.X 9.00 I.D. X 1/8 THK; VITON;McMASTER-CARR	1
	8	COM'L.	WASHER;LOCK;1/4 SCREW; STN. STL. TYPE 18-8	8
	7	COM'L.	SOCKET HEAD CAP SCREW;1/4-20 UNC X 3/4 LG.; STN. STL. TYPE 18-8	4
	6	COM'L.	SOCKET HEAD CAP SCREW;#4-40 UNC X 1/2 LG.; STN. STL. TYPE 18-8	4
B				
	4	MD-466719	IRLAB FRONT COVER ASSEMBLY	1
	3	MD-466705	IRLAB PICTURE FRAME ASSEMBLY	1
	2	MD-466713	IRLAB SPINDLE ASSEMBLY	1
	1	MD-466716	IRLAB DEWAR ASSEMBLY	1

PARTS LIST

UNLESS OTHERWISE SPECIFIED			ORIGINATOR	H.CEASE	02-FEB-2010
.XX	.XXX	ANGLES	DRAWN	B.ELLISON	02-FEB-2010
± .02	± ***	± ***	CHECKED	J.RAUCH	03-MAR-2010
			APPROVED	H.CEASE	04-MAR-2010

1. BREAK ALL SHARP EDGES .015 MAX.
2. DO NOT SCALE DRAWING.
3. DIMENSIONS BASED UPON ASME Y14.5M-1994
4. MAX. ALL MACH. SURFACES 125
5. DRAWING UNITS: U.S. INCH

USED ON

MATERIAL: SEE PARTS LIST ABOVE

FERMI NATIONAL ACCELERATOR LABORATORY
UNITED STATES DEPARTMENT OF ENERGY

MECHANICAL/DETECTORS PIXEL DETECTOR IRLAB VESSEL ASSEMBLY

SCALE	DRAWING NUMBER	SHEET	REV
1:1 & AS NOTED	9213.750-ME-466704	1 OF 1	B

CREATED WITH : Ideas12NXSeries | GROUP: PPD/MECHANICAL DEPARTMENT

NOTICE: IMAGE OBTAINED FROM FERMILAB WEB SITE

This information is provided for REFERENCE use only. Not for MANUFACTURE, or DESIGN INFORMATION. All information contained in this document represents work sponsored by an agency of the U.S. Government. Neither the U.S. Government nor any agency thereof, nor Universities Research Association, Inc., nor any of their employees or officers, makes any warranty, express or implied, or assumes any legal liability or responsibility for the accuracy, completeness, or usefulness of any information, apparatus, product or process disclosed, or represents that its use would not infringe privately owned rights.

IRLabs Vessel
Description, ODH analysis, Failure Mode and Effect Analysis

Herman Cease 9/28/10

SUMMARY

The IRLabs ND8 vessel is used as a small test stand in the Lab C south clean room in the SiDet facitily. The test stand is an 8 inch commercial aluminum vessel used as a vacuum chamber. It has an internal 2.6 liter LN2 dewar. A CCD detector is attached to the cold finger inside the dewar. The temperature of the detector is controlled using a heater. The heater is located inside the vacuum near the CCD and is controlled using the heater controller. There is a 3/8 NPT port with a 1/3 psid, Nupro valve which acts to relieve any unexpected positive pressure inside the vacuum chamber. The LN2 dewar is filled by hand and is at atmospheric pressure. Drawing 466704 is an assembly drawing of the test stand.

Reference:
http://www.infraredlaboratories.com/ND_Series_Dewars.html

VACUUM VESSEL REQUIREMENTS

Vacuum vessels, including evacuated chambers and insulating jacketed dewars, pose a potential hazard to equipment and personnel from rupture or implosion. FESHM chapter 5033 specifies the procedure to be followed in designing, fabricating, testing, and using vacuum vessels in order to reduce hazards with volumes greater than 35 cubic feet. The IRlabs chamber has a volume less than 1 cubic foot so it does not warrant a vacuum vessel engineering note.

POSITIVE PRESSURE RELEIF VALVE

The nitrogen source is at atmospheric pressure. In the event of a liquid nitrogen leak inside the vacuum vessel, a positive pressure relief valve is attached to the vessel. The relief is a Nupro 3/8 NPT 1/3 psi valve.

OXYGEN DEFFICIENCY HAZARD ANALYSIS

The volume of nitrogen used is within the limits of the existing Lab C clean room ODH analysis. The existing constraint is not more than 99 liters are to be used at one time in lab C. The nitrogen will be filled with a 5 liter hand flask using existing procedures. No change to the SiDet ODH analysis is required.

FAILURE MODE AND EFFECT ANALYSIS / WHAT IF ANALYSIS

The test stand contains a vacuum system, a LN2 dewar, and an external heater control. There are no process valves other than the positive pressure relief valve. The vacuum volume is too small for a stored energy hazard per FESHM 5033. The heaters are fused against over current in the heater controller. A JHA is used to ensure than personal is aware of the cold operating temperatures. The chamber is not to be opened until the operating temperature has returned to room temperature.

HAZARD ANALYSIS
IRLABS TEST STAND

Dec. 21, 2010
Herman Cease

Description of Work:

A small commercial test stand is used in Lab C for testing CCDs. The test stand is an 8 inch diameter 14 inch long aluminum vacuum chamber. It is cooled with an internal 2.6 liter dewar open to the atmosphere. The CCD temperature is controlled using a heater located inside the test stand. The heater is fused with a thermal switch. The heater power is controlled using an external controller. The chamber is not opened unless the internal temperature has returned to room temperature. Once the chamber is at room temperature, and the vacuum is vented, the CCD can be removed from the test stand.

Hazard Analysis Form

This form can be used by Fermilab Employees, Fermilab Supervisors, Fermilab Task Managers, Construction Coordinators, Service Coordinators and Fermilab Subcontractors. This is a dynamic document which may require modification as the project moves from start to finish and should be readily available at the site where the work is being performed.

Note: Not all sections of the first page are applicable to every job or task, complete what is necessary for your specific job or task.

Job Title IRLabs Vessel LN2 Fill

Job Location Lab C South Clean Room

Contract/Work Order # _____

TO BE COMPLETED FOR WORK INVOLVING SUBCONTRACTORS

Subcontractor (if applicable)	**Fermilab**
Company _____	Project Eng/C.M. _____
Project Manager _____	Phone _____
Phone _____ Page _____	TM/CC/SC _____
ESH Rep. _____	Phone _____ Page _____
Phone _____ Page _____	ES&H Rep. _____
	Phone _____ Page _____

AT LEAST TWO SIGNATURES ARE REQUIRED

☐ Prepared _____ Date _____

Print Name _____

☐ Accepted _____ Date _____

Print Name _____

☐ Accepted as noted _____ Date _____

Print Name _____

Description of Work: **The IRLabs Vessel is filled with LN2 using a hand flask.**

Personal Protective Equipment: (Check protective equipment required for the job.)

□ Safety glasses □ Side shields
□ Hearing Protection
□ 3.0 Brazing goggles
X Face shield
□ Leather gloves
□ Chemical resistant gloves (specify type):

□ Chemical splash goggles
□ Hard Hats
□ Impact goggles
□ Rubber apron
□ Hot/Cold thermal protective gloves
□ Respirators

X Other required PPE (specify):
Cryogenic Gloves, Face Shield, Long sleeves and pants, Safety Shoes

□ Fall protection equipment (specify):

Environmental Aspects (check one):

X Yes, I have thought about the environmental aspects of this job and will document such aspects and mitigation steps within this document.

□ Yes, I have thought about the environmental aspects of this job and no such credible aspects exist and therefore do not need to be written in this document.

Equipment required for the job: (List the tools needed to perform the job.)
5 Liter hand flask for Filling LN2

Work Plan History Information: (List any lessons learned incidents from this job, tips from previous jobs)

Improvement/Feedback: At the conclusion of the job, the Task Manager, Supervisor and/or Project Leader shall work with those involved to consider lessons learned and receive feedback in order to improve future work plans.

Check One:

□ **Yes** we have considered lessons learned and accepted feedback on this job and will communicate such information so that future work plans may be improved.

X Yes we have considered lessons learned feedback and determined that future work plans do not need to be improved.

Utilizing the format below, identify hazards and environmental aspects, and their corresponding safety precautions/procedures to mitigate hazards. Use as many sheets as necessary.

HAZARD ANALYSIS

Step	Description	Hazards/ Environmental Aspects	Precautions / Safety Procedures
1	Working with Cryogens	Cold Temperatures. Persons exposed to cold temperatures may experience frostbite or loss of extremities.	Wear appropriate protective clothing per FESHM/5000/5101, and as listed above. Do not open the chamber until it has reached room temperature.
2			
3			
4			
5			
6			
7			
8			
9			

I have reviewed this hazard analysis and I understand the hazards and required precautionary actions. I will follow the requirements of this hazard analysis or notify my supervisor or Fermilab contact if I am unable to do so.

Name and ID (please print)	Signature	Date

Herman Cease

From: "Tom Peterson" <tommy@fnal.gov>
To: "Herman Cease" <cease@fnal.gov>
Cc: "Tom Diehl" <diehl@fnal.gov>; "Angela Sands" <asands@fnal.gov>; "Russ Rucinski" <rucinski@fnal.gov>; "Del Allspach" <allspach@fnal.gov>; "Thomas J. Peterson" <tommy@fnal.gov>
Sent: Tuesday, December 21, 2010 3:55 PM
Subject: Re: Cryo review panel - IRLabs setup

Hello Herman,

Our panel has reviewed the documentation and looked at the IRLabs vacuum chamber with hand-filled internal LN2 dewar. We recommend permission to go ahead and operate this test setup. We have just one comment, which is that the Job Hazards Analysis should be redone on the latest form, where PPE is specifically listed.

We note that extra care is required when pouring LN2 into an opening above head height, since more of the operator's body and face are potentially in the way of a spill or splash. But the PPE should protect against cryo burns, and we heard that your people have plenty of experience with handling LN2 in this manner for other similar setups.

Feel free to forward this recommendation message to whomever should see it.

Regards,
Tom

On Dec 16, 2010, at 10:11 AM, Herman Cease wrote:

> Hi Tom,
>
> We would like to submit this document set for review. The document set includes a few brief paragraphs and the JHA for operating the test stand.
> It is for the IRLabs vacuum chamber with hand fill internal dewar. The panel had the opportunity to see the chmaber a couple of weeks ago. One question that was raised at that time was about frost on the vent line. We will experiment with partially restricting the vent line with a plasic cap. The intention is to increase the flow velocity near the exit of the vent. Another option is to extend the length of the vent so that it stays warm at the vent exit. We will make sure that the vent can operate for a long duration without significant frosting.
>
> If you have questions about the document set or would like to see the setup again, let us know.
> At this time we would like to proceed with the review, but have no specific startup date.
>
> Thanks
> Herman<IRlabs-Vessel-JHA-9-28-10.doc><MD-ENG-276 cover.pdf><466704-B1.pdf><IRLabs_flatwindow_enote.doc><IRlabs-Vessel-Description-ODH-FMEA9-28-10.doc>

Thomas J. Peterson
Fermilab, Technical Division
630 840 4458
tommy@fnal.gov