Fermilab

Particle Physics Division
Mechanical Department Engineering Note

Number: MD-ENG-285 Date: NOV. 12, 2010

Project Internal Reference:

Project: LBNE

Title: LBNE Foundation Heater Conceptual Design

Author(s): K. Beczkiewicz

Reviewer(s): Mark Adamowski 11/29/10 Mark Adamowski

Key Words: LBNE, Cryostat, Foundation, Heating, Conceptual Design

Abstract Summary: The following engineering note is a conceptual design for the foundation heater system to be installed in the concrete foundation of the LBNE LAr cryostat. The purpose of the heaters within the concrete liner is to prevent the water within the rock cavern surrounding the cryostat from freezing and thus removing the possibility of damage being caused to the cryostat.

Applicable Codes:

Background

Based on previous analyses, the temperature of the liquid argon within the cryostat of the LBNE Far Detector will present unwanted consequences for the rock wall of the cavern in which the LAr cryostat is to be placed. Of greatest concern is the high probability of the freezing of the water within the rock wall, which could lead to frost heave and the potential for damage to the cryostat. In order to combat this issue, a heating system needs to be installed to maintain a temperature in the rock wall that remains above freezing for the duration of the cryostat's operation. For this analysis, the temperature at which the rock wall is to be maintained is 5°C.

Information from LBNE Document Database and Other Sources

The general concept for the foundation heating system is to place conduits in the concrete liner and then place heating elements in the conduits. The basic conceptual design is illustrated below in Fig. 1 (from LBNE-doc#874-v1, p.7 of report; https://lbne2-docdb.fnal.gov:440/cgi-bin/RetrieveFile?docid=2380&version=1&filename=211674_-_DUSEL_Cryo_Tank_and_Plant_-_Concept_Report_Rev_A.pdf)[1]

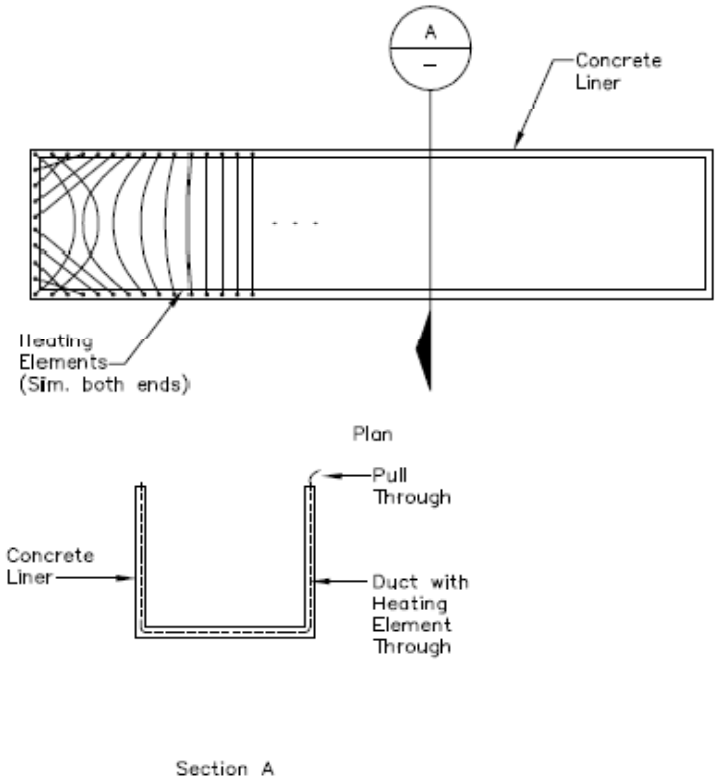

Figure 1: Basic Conceptual Design

Based on other information in the document database, the rock temperature, and, by association, the outer surface of the concrete liner, are to remain at or above 5°C.

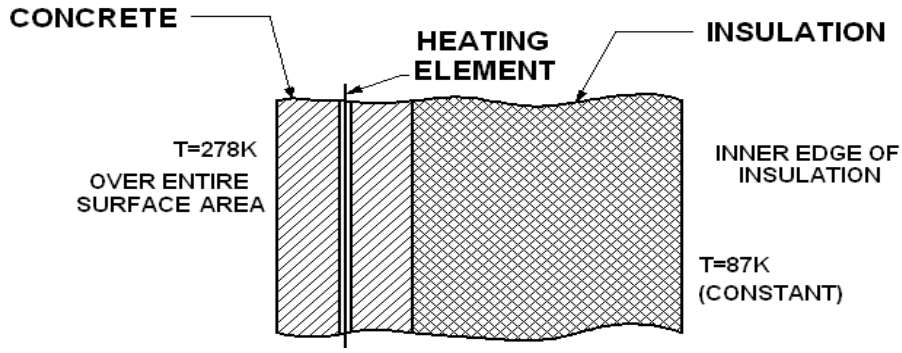

Figure 2: Cross-section of concrete liner and insulation

The dimensions of the stainless steel primary membrane are 70m x 16m x 16m (LxWxH). The thickness of the polyurethane foam insulation and concrete liner are 1.0m and 0.5m, respectively.

Table 1: Heat Load Values

	SURFACE AREA	THICKNESS	THERMAL CONDUCTIVITY	HEAT INPUT
BASE	1390 m^2	0.5 m	1.73 W/mK	8 kW
END WALLS	722 m^2	0.5 m	1.73 W/mK	3.8 kW
SIDE WALLS	2770 m^2	0.5 m	1.73 W/mK	15.8 kW
ROOF	1390 m^2	0.5 m	1.73 W/mK	8.7 kW

*Heat input values adapted from LBNE Doc#2548-v1 [2]

Based on the fact that only the concrete liner will be heated, the heat input that takes place through the roof of the cryostat can be ignored. Therefore, the heat input into the cryostat is the sum of the heat load through the base, side and end walls, which is equal to 27.6 kW.

According to *Heat Transfer*, 4th Ed. (Holman p. 32)[3], the temperatures on either side of the wall must be equal. The temperature distribution throughout the solid is best represented by a parabolic distribution (see Fig. 3).

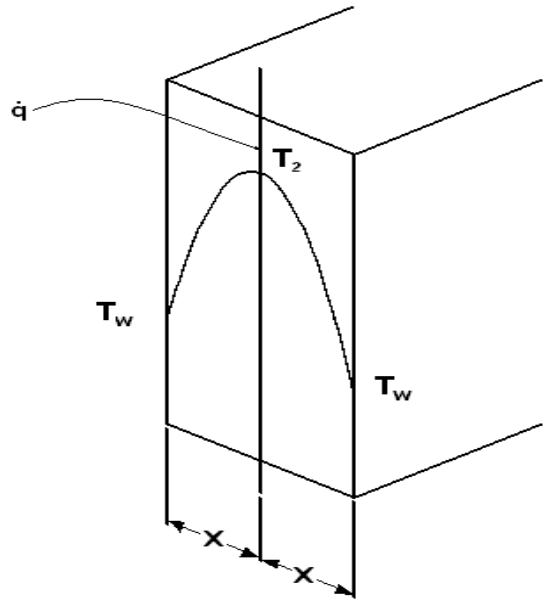

Figure 3: Temperature Distribution in a Solid

For a heating element spaced equidistant from the edges of a solid, the temperature at each of the solid's walls will be equal. In this figure, q' is the heat generated by the heating element within the solid.

<u>Heat Generation and Necessary Temperatures</u>

For this analysis, it is assumed that, in order to maintain a minimum temperature at the rock wall/concrete liner interface, the heat generated by the heating elements needs to be equal to or greater than the heat that is being removed to the liquid argon. As was previously stated, the heat transfer that takes place through the roof can be ignored. Therefore, the heat lost to the cryostat from the rock wall is 27.6 kW.

According to Holman,

$$T_i - T_w = \frac{\dot{q}}{2k} x^2 \qquad (1)$$

In this equation,

- T_i is the temperature of the heating element within the solid
- T_w is the wall temperature
- $\dot{q}$ is the heat generated per unit volume
- k is the thermal conductivity
- x is the distance from the wall to the heating element.

For the basic conceptual design for this project, there are several heating elements spaced throughout the concrete liner. The point at which the concrete will have the greatest potential to drop below the 5°C acceptable limit will be the point that is the furthest from the heating elements. This happens to be the point on the wall halfway between two adjacent heaters (see fig. 4).

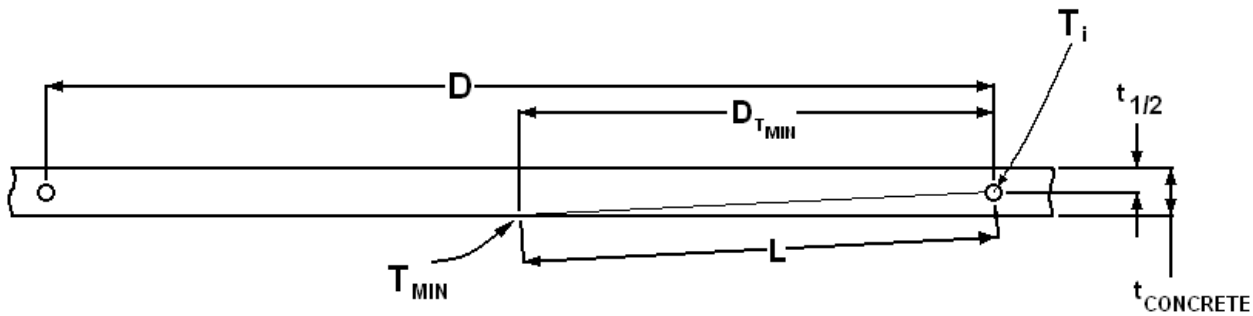

Figure 4: Overhead view of Concrete Wall Section with Dimensions

In the figure, the two circles on either end are the conduits where the heating elements would be installed (not to scale).

- D is the spacing of the heater elements
- D_{T_MIN} is the distance between the heating element and the point at which the lowest temperature would occur, which is simply one-half of D
- $t_{CONCRETE}$ is the thickness of the concrete
- $t_{1/2}$ is one half of the concrete's thickness
- T_{MIN} is the minimum temperature that would occur
- L is the greatest distance between the heating conduit and the coolest point on the concrete liner's wall. It is essentially the hypotenuse of the right triangle that has legs of $t_{1/2}$ and D_{T_MIN}.

Substituting the distance, L, into equation 1, we are left with

$$T_i - T_{MIN} = -\frac{\dot{q}}{2k}L^2 \qquad (2)$$

The necessary temperature of the heating elements in the event of one element failing was calculated first. This ensures that even if a heating element should fail, the concrete liner will still be maintained above the minimum allowable temperature. If one heating element fails, the spacing is doubled; as an example, for a 1 m spacing of functional heating elements, the effective spacing of heating elements if one failed would be 2 m, which would also increase D_{T_MIN} to 1m. This gives the value for L as

$$L = \sqrt{\left(D_{T_MIN}\right)^2 + \left(t_{1/2}\right)^2} \qquad (3)$$

$$L = \sqrt{(1.0m)^2 + (0.25m)^2} = 1.03m$$

The value for T_{MIN} is 278K. In this analysis, the heat generated per unit volume, $\dot{q}$, is (27.6 kW) / (1640 m^3) = 16.8 W/m^3. The thermal conductivity of concrete is k=1.73 W/m*K. Substituting these values into equation 2,

$$T_i - 278K = -\frac{(-16.8\ W/m^3)}{2 * \left(1.73\ \frac{W}{m * K}\right)} * (1.03m)^2$$

$$T_i = 278K + \frac{(16.8\ W/m^3)}{2 * \left(1.73 \frac{W}{m * K}\right)} * (1.03m)^2$$

$$T_i = 283K$$

In order to determine the value for T_{MIN} when all heating elements are functioning properly, the value for T_i is substituted into the equation, along with the new value of L,

$$L = \sqrt{(0.5m)^2 + (0.25m)^2} = 0.559m$$

which yields

$$T_i - T_{MIN} = -\frac{(-16.8W/m^3)}{2 * \left(1.73 \frac{W}{m * K}\right)} * (0.559m)^2$$

$$-T_{MIN} = -283K + -\frac{(-16.8\ W/m^3)}{2 * \left(1.73\ \frac{W}{m * K}\right)} * (0.559m)^2$$

$$T_{MIN} = 282K$$

A table of several different values for conduit spacing and temperature can be seen below.

Table 2: Heater Element Spacing and Temperature Values

	FAILED HEATER				FUNCTIONAL HEATERS (@FAILING DESIGN)			
SPACING	D (T_MIN)	L	T_i	T (T_MIN)	D (T_MIN)	L	T_i	T (T_MIN)
0.10	0.10	0.269	278.4	278	0.05	0.255	278.4	278.0
0.13	0.13	0.280	278.4	278	0.06	0.258	278.4	278.1
0.20	0.20	0.320	278.5	278	0.10	0.269	278.5	278.1
0.25	0.25	0.354	278.6	278	0.13	0.280	278.6	278.2
0.30	0.30	0.391	278.7	278	0.15	0.292	278.7	278.3
0.38	0.38	0.451	279.0	278	0.19	0.313	279.0	278.5
0.40	0.40	0.472	279.1	278	0.20	0.320	279.1	278.6
0.50	0.50	0.559	279.5	278	0.25	0.354	279.5	278.9
0.60	0.60	0.650	280.1	278	0.30	0.391	280.1	279.3
0.63	0.63	0.673	280.2	278	0.31	0.400	280.2	279.4
0.70	0.70	0.743	280.7	278	0.35	0.430	280.7	279.8
0.75	0.75	0.791	281.0	278	0.38	0.451	281.0	280.1
0.80	0.80	0.838	281.4	278	0.40	0.472	281.4	280.3
0.88	0.88	0.910	282.0	278	0.44	0.504	282.0	280.8
0.90	0.90	0.934	282.2	278	0.45	0.515	282.2	281.0
1.00	1.00	1.03	283.2	278	0.50	0.559	283.2	281.7
1.13	1.13	1.15	284.5	278	0.56	0.616	284.5	282.6
1.25	1.25	1.27	285.9	278	0.63	0.673	285.9	283.7
1.38	1.38	1.40	287.5	278	0.69	0.732	287.5	284.9
1.50	1.50	1.52	289.3	278	0.75	0.791	289.3	286.2
1.63	1.63	1.64	291.2	278	0.81	0.850	291.2	287.6
1.75	1.75	1.77	293.2	278	0.88	0.910	293.2	289.2
1.88	1.88	1.89	295.4	278	0.94	0.970	295.4	290.8
2.00	2.00	2.02	297.8	278	1.00	1.03	297.8	292.6
2.13	2.13	2.14	300.3	278	1.06	1.09	300.3	294.5
2.25	2.25	2.26	303.0	278	1.13	1.15	303.0	296.5
2.38	2.38	2.39	305.8	278	1.19	1.21	305.8	298.6
2.50	2.50	2.51	308.7	278	1.25	1.27	308.7	300.8
2.63	2.63	2.64	311.9	278	1.31	1.34	311.9	303.2
2.75	2.75	2.76	315.1	278	1.38	1.40	315.1	305.6
2.88	2.88	2.89	318.6	278	1.44	1.46	318.6	308.2
3.00	3.00	3.01	322.1	278	1.50	1.52	322.1	310.9

The best way to contain the total cost of the heater cables would be to use as few as possible. The only issue then is that a limiting spacing is reached due to the fact that the heater cables would have to generate more heat on a per-foot basis in order to make up for the increased distance between heater cables. In order to balance out the effects of both of those issues, a heater element spacing of 1.25 m was selected, due to the fact that it is relatively at the middle of the range of spacing, which will minimize the number of heater elements as well as the heat output required of each element. For heater cables spaced at 1.25 m, when one cable is not working, the temperature of the cable necessary to maintain a temperature of 278K at the edge of the concrete liner would be 286K. At this temperature, the minimum temperature at the edge of the concrete liner when all cables are working properly is 284K. If the heater cables were run at 280.2K, the temperature that would maintain the concrete/rock cavern interface at 278 K, and one heater element were to fail, the temperature of the interface would decrease to about 272.3K, just below the freezing point of water.

Heater Power/length

Dividing the necessary total heat generation by the total volume of the concrete liner gives the necessary heat generation per cubic meter. That value, which was calculated earlier in this note, is 16.8 W/m^3. The total heat per length can be determined by multiplying the heater power by the cross-sectional area that would be affected by one heater cable.

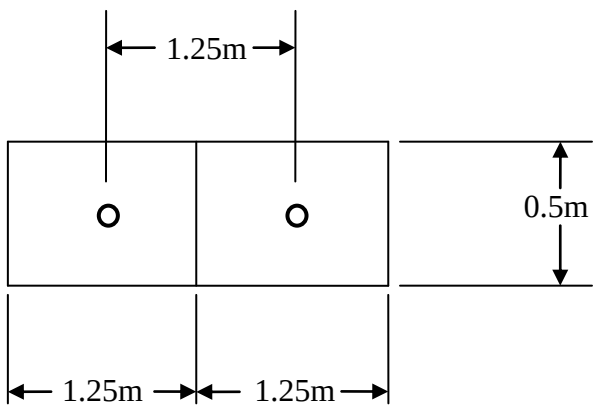

Figure 5: Overhead view of concrete liner

$$q' = \dot{q} * A$$

$$q' = \left(16.8\ \frac{W}{m^3}\right) * (0.5m * 1.25m)$$

$$q' = 10.5\frac{W}{m} = 10.5\frac{W}{m} * \frac{1m}{3.2808\ ft} = 3.20\frac{W}{ft}$$

If all of the heaters are working properly, the necessary heat generation will be 3.20 W/ft. If one of the heaters were to fail, the heat generation for the heater cables on either side would need to be doubled, which yields 6.40 W/ft. For heater cables run through the center of the concrete liner spaced at 1.25m, the length of one heater cable would be 55m (181 ft) and the total length of heater cable that would be needed would be about 3740 m (12300 ft).

Budget Costs

Several different heater trace cable options were researched and prices were quoted. A summary of the different options that were researched is shown below. Additional information can be found on the product catalog pages following this note.

VENDOR	CABLE TYPE	POWER/FT (W/FT)	COST PER FT	TOTAL COST
CHROMALOX	CW	4	$8.30	$102,100
CHROMALOX	SR	5	$7.50	$92,200
MCMASTER-CARR	SR	5	$3.68 (FOR QTY>100FT)	$45,300
TEMPCO	CW	5	$6.80	$83,640
TEMPCO	SR	5	$7.20	$88,600

CW=Constant Wattage; SR=Self-regulating

References

1. Basic conceptual design of cryostat liner: LAr20 Cryostat & Refrig. Concept Report at 300L & 4850L - Final report by Arup. Arup USA, Inc. LBNE Doc #874-v1, p.7. 22 Sept. 2010. <https://lbne2-docdb.fnal.gov:440/cgi-bin/RetrieveFile?docid=2380&version=1&filename=211674_-_DUSEL_Cryo_Tank_and_Plant_-_Concept_Report_Rev_A.pdf>.

2. LAr Cryostat and Cryogenic Plant conceptual design at 800L by Arup. Arup USA, Inc. LBNE Doc #2548-v1, p. 13, 13 Oct. 2010. < https://lbne2-docdb.fnal.gov:440/cgi-bin/RetrieveFile?docid=2548&version=1&filename=211674%20-%20DUSEL%20Cryo%20Tank%20and%20Plant%20-%20Phase%202%20Report%20Rev%20A.pdf>.

3. Holman, J.P. Heat Transfer, 4th Ed., p. 32. McGraw Hill, Inc., St. Louis. 1976.

CWM

Constant Wattage Medium Temperature

- Uniform Thermal Output
- Accurate, Easy to Control and Monitor
- Low Energy Cost
- No Inrush at Any Ambient
- Industrial/Process and Commercial/Construction Applications
- Flexible to Most Any Configuration
- Fluoropolymer Jacket
- Maximum Exposure Temperature, Power Off, 392°F (200°C)
- Steam Cleanable on Process Equipment Up to 190 PSIG (Power Off)
- 4, 8 and 12 W/Ft.
- 120, 208 - 277 and 480 Volt From Stock
- Approximate Size 1/4"W x 1/8"H
- Minimum Bend Radius 1-1/4"
- For Use on Metallic Pipes Only
- Consult Factory for Use on Plastic Pipes

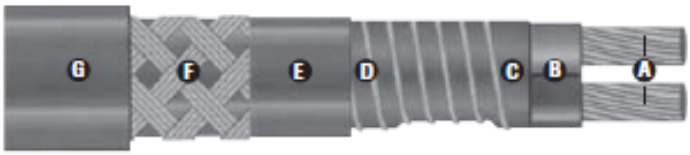

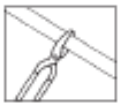

Cut to Length In Field

Medium Temperature

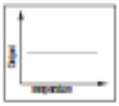

Constant Wattage Output

Note — Consult maximum maintenance temperature chart on page G-15 for allowable watt densities.

Description

Chromalox CWM constant wattage heating cable is a proven, reliable solution for industrial process temperature maintenance and freeze protection. CWM features a parallel heating core that produces uniform thermal output over its entire length. Using a single power point, you can easily configure and install a heat tracing system as short as several feet or as long as 780 feet right in the field. System design only requires that you match the CWM cable thermal output to the heat loss of your piping system.

CWM is flexible at most ambient temperatures and can be wrapped around piping and complex fittings. It is rugged, easy to monitor and maintain temperature, and has zero inrush at start-up. With 392°F (200°C) fluoropolymer electrical insulation overjacketing, CWM has outstanding electrical and thermal properties, and is well suited for most chemically hostile environments. An extensive range of wattages and voltages are available immediately from Chromalox stock.

Features

- Durable, non-aging fluoropolymer jacket ensures long service life and can be used in some hostile environments.
- Flexible, easy to install on most equipment and delivers long-term reliable performance.
- Eliminates the need for oversized wiring or switchgear.
- Accurate temperature, reliable electric heat that can be consistently controlled and easily monitored.
- Safe and rugged.
- Parallel circuitry allows cut-to-length.
- High performance, rated to withstand up to 392°F saturated steam (190 psig) temperature (power off).
- Low profile, uses standard size thermal insulation on piping and process equipment.

Construction

A **Twin 12 AWG Copper Buss Wires** — Provide reliable, consistent electrical current.

B **FEP Insulation Jacket** — Electrically insulates buss wires.

C **Pairing Jacket** — Secures two buss wires together and provides wrapping surface for Nichrome wire.

D **Nickel Chromium Wire** — Heating component of the cable.

E **FEP Insulation** — Rugged outer sheath protects heating cable, assures longer service life, and provides protection against environmental application hazards.

F **Tinned Copper Braid** — Plated copper braid increases robust construction, provides ground path and provides additional protection in any location. Suffix "C" in model number.

● **FEP Overjacket (optional)** — Fluoropolymer overjacket, over the braid, provides protection from most aqueous and chemically corrosive solutions. Suffix "T" in model number.

Approvals[1]

UL Listed for ordinary areas.

CSA Certified for ordinary and:

- Class I, Div. 2, Groups A, B, C, D
- Class II, Div. 2, Groups F, G. Rated T3 Temperature Class[2].

Notes —

1. Depends on specific model.
2. Exception: Cable surface temperature shall not exceed 190°C in Class II, Div. 2, Group F; 165°C in Class II, Div. 2, Group G.

CWM

Constant Wattage Medium Temperature *(cont'd.)*

Specifications

Model	Output (W/Ft.)	Nominal Voltage (Vac)	Circuit Load (Amps/Ft.)	Max. Circuit Length (Ft.)
CWM 4-1CT	4	120	0.033	350
CWM 8-1CT	8	120	0.067	240
CWM 12-1CT	12	120	0.100	200
CWM 4-2CT	4	240	0.017	700
CWM 8-2CT	8	240	0.033	480
CWM 12-2CT	12	240	0.050	400
CWM 12-4CT	12	480	0.025	780

Output Wattage at Various Operating Voltages (Ft.)

Model	120V	208V	220V	240V	277V	480V
CWM 12-1	12	—	—	—	—	—
CWM 8-1	8	—	—	—	—	—
CWM 4-1	4	—	—	—	—	—
CWM 12-2	3	9	10.1	12	—	—
CWM 8-2	2	6	6.7	8	—	—
CWM 4-2	—	3	3.4	4	—	—
CWM 12-4	—	2.3	2.5	3	4	12

Maximum Allowable Pipe Maintenance Temperature with Power On

Output (W/Ft.)	Temperatures (°F)								
	3	4	6	6.7	8	9	10.1	10.6	12
w/o AT-1 Tape	340	325	293	282	262	246	229	222	200
w/ AT-1 Tape	350	344	332	328	320	314	307	304	296

CWM

Constant Wattage Medium Temperature *(cont'd.)*

Ordering Information

Output (W/Ft.)	Nominal Voltage (Vac)	Model	Stock	PCN	Wt./1000' (Lbs.)
4	120	CWM 4-1C	S	392040	96
		CWM 4-1CT	S	392075	110
	240	CWM 4-2C	S	392059	96
		CWM 4-2CT	S	392083	110
8	120	CWM 8-1C	S	392139	96
		CWM 8-1CT	S	392163	110
	240	CWM 8-2C	S	392147	96
		CWM 8-2CT	S	392171	110
12	120	CWM 12-1C	S	392227	96
		CWM 12-1CT	S	392251	110
	240	CWM 12-2C	S	392235	96
		CWM 12-2CT	S	392260	110
	480	CWM 12-4C	S	392243	96
		CWM 12-4CT	S	392278	110

Accessories

Accessories		U Series	DL	EL
Power Connection	Heat trace to electrical service connection	UPC	RTPC	SSK
Splice & Tee		UMC	RTST	RT-RST
End Seal	For terminating cable	UES	RTES	RT-RES
Lighted End Seal		USL	RTST-SL	N/A
Thermostat	Ambient air sensing thermostat	UAS	RTAS	THL/TXL
	Line sensing mechanical thermostat	UBC	RTBC	THR/TXR

To Order — General Application & Installation Accessories such as tape, pipe straps, warning labels, etc., refer to the U Series, DL & EL General Application Accessories page at the end of this section.

Ordering Information

To Order — *Complete the Model Number using the Matrix provided.*

Model	Constant Wattage Medium Temperature			
CWM	Constant Wattage, Medium Temperature Heating Cable			
	Code	Output (W/Ft.)		
	4	Four		
	8	Eight		
	12	Twelve		
		Code	Nominal Voltage (Vac)	
		1	120	
		2	240	
		4	480	
			Code	Braid and Overcoat Options
			C	Standard tinned-copper metallic braid for additional protection and ground path
			CT	Fluoropolymer corrosion resistant overjacket over braid for hostile/corrosive environments
CWM	5	1	C	Typical Model Number

CONSTANT WATTAGE

More Information is Available Online on Heat Trace.

Bookmark Your Browser to ***www.chromalox.com*** *and Select* ***Manuals.***

SRL
Self-Regulating Low Temperature

- Self-Regulating, Energy Efficient
- 16 AWG Buss Wire
- Circuit Lengths to 660 Feet
- Process Temperature Maintenance to 150°F (65°C)
- Maximum Continuous Exposure Temperature, Power Off, 185°F (85°C)
- Industrial Freeze Protection Applications
- Freeze Protection of Fire Protection System Piping
- Field Splicing Without Disrupting Heat Output
- 3, 5, 8 and 10 W/Ft.
- 120 and 208 - 277 Volt From Stock
- Approximate Size 3/8"W x 1/8"H
- Min. Bend Radius 1-1/8"
- For Use on Metal and Plastic Pipes

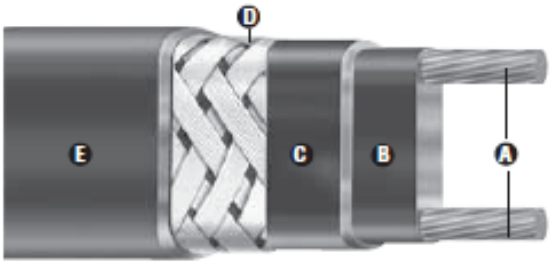

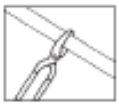
Cut to Length In Field

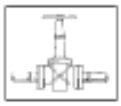
Can be Single Overlapped

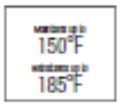

Low Temperature

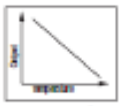
Self Regulating Output

Description

Chromalox SRL self-regulating heating cable provides safe, reliable heat tracing for freeze protection of pipes, valves, tanks and similar applications. Constructed of industrial grade 16 AWG buss wire with a tinned copper braid and optional overjacketing, SRL ensures operating integrity in Div. 2 hazardous environments as well as certain corrosive industrial environments. SRL heating cable has a maximum maintenance temperature rating of 150°F (65°C).

Features

- Energy efficient, self-regulating SRL uses less energy when less heat is required.
- Easy to install, SRL can be cut to any length (up to max. circuit length) in the field.
- Field splices can be performed easily in minutes with no scrap or wasted cold sections.
- SRL features lower installed cost than steam tracing, less maintenance expense and less downtime.
- SRL can be overlapped without burnout, which simplifies heat tracing of in-line process equipment such as valves, elbows and pumps.
- Because SRL is self-regulating, over-temperature conditions are minimized.
- Chromalox termination, splice, tee and end seal kits reduce installation time.

Construction

A **Twin 16 AWG Copper Buss Wires** — Provide reliable electrical current capability.

B **Semiconductive Polymer Core Matrix** — "Self-Regulating" component of the cable, its electrical resistance varies with temperature. As process temperature drops, the core's heat output increases; as process temperature rises, the heat output decreases.

C **Polyolefin Jacket** — Flame retardant, electrically insulates the matrix and buss wires and provides resistance to water and some inorganic chemical solutions.

D **Tinned Copper Braid** — Provides additional mechanical protection in any environment and a positive ground path.

E **High Temperature Fluoropolymer or TPR Overjacket (optional)** — Corrosion resistant, flame retardant overjacket is highly effective in many environments. TPR coatings protect against certain inorganic chemical solutions. Fluoropolymer coatings are used for exposure to organic or corrosive solutions. These coatings also protect against abrasion and impact damage.

Approvals

ATEX and IECEX Exe IIGb, Factory Mutual (FM) Approved for ordinary areas. UL Listed, CSA Certified for ordinary areas. UL listed for freeze protection of fire protection system piping. FM Approved for hazardous (classified) areas when used with U Series, DL and EL accessories:

- Class I, Div. 2, Groups B, C, D (gases, vapors)
- Class II, Div. 2, Groups F, G (combustible dust)
- Class III, Div. 2 (easily ignitable fibers and fillings)
- 3 Watt Rated T6 Temperature Class
- 5 and 8 Watt Rated T5 Temperature Class
- 10 Watt Rated T4A Temperature Class.

CSA Certified for hazardous areas when used with DL or EL accessories:

- Class I, Div. 2, Groups A, B, C, D
- Class II, Div. 2, Groups F, G.
- ATEX and IECEX Exe IIGb
- Ex IIG Exe II

SRL

Self-Regulating Low Temperature *(cont'd.)*

Thermal Output Ratings on Insulated Metal Pipe[1]

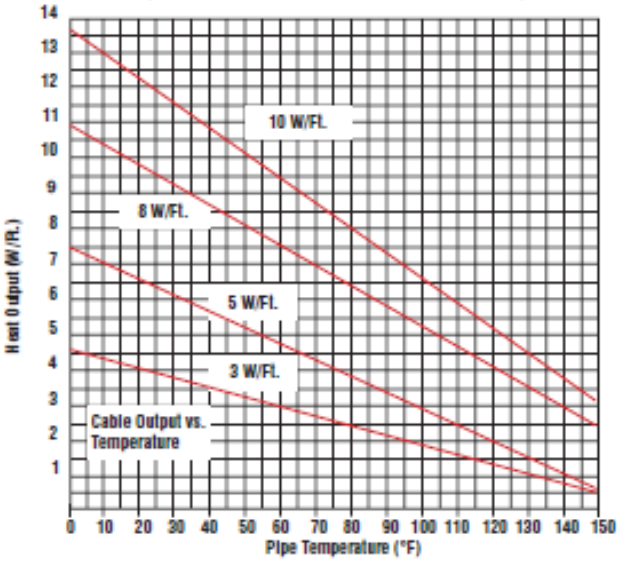

Note 1 — Thermal output is determined per IEEE 515-2004 Standard for testing, design installation, and maintenance of electrical resistance heat tracing section 4.1.11 Method C.

Thermal Output Ratings on Plastic Pipe with Aluminum Tape

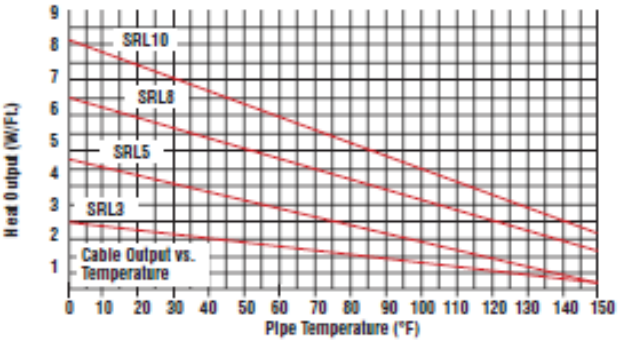

Output Wattage at Alternate Voltages (W/Ft.)

Model	208V	% Change In Output	220V	% Change In Output	277V	% Change In Output
SRL 3	2.4	-20	2.6	-13	3.4	+15
SRL 5	4.1	-18	4.5	-10	5.6	+13
SRL 8	6.88	-14	7.28	-9	8.96	+12
SRL 10	8.7	-13	9.2	-8	11.1	+10

Circuit Breaker Selection (Max. Circuit Lengths in Ft.)

Cable Rating	50°F Start-Up (Ft.)						0°F Start-Up (Ft.)						-20°F Start-Up (Ft.)					
	10A	15A	20A	25A	30A	40A	10A	15A	20A	25A	30A	40A	10A	15A	20A	25A	30A	40A
SRL3-1C	205	305	360	NR	NR	NR	135	200	270	330	360	NR	120	185	245	300	360	NR
SRL3-2C	400	600	660	NR	NR	NR	275	415	555	660	NR	NR	245	370	495	600	660	NR
SRL5-1C	125	185	250	270	NR	NR	90	135	180	225	270	NR	80	120	160	205	245	270
SRL5-2C	250	375	505	540	NR	NR	180	270	360	450	540	NR	160	245	325	405	490	540
SRL8-1C	100	150	200	215	NR	NR	70	110	145	180	215	NR	65	100	130	165	200	210
SRL8-2C	185	285	375	420	NR	NR	135	200	265	335	395	420	120	175	235	300	350	420
SRL10-1C	60	95	130	160	180	NR	50	80	105	130	155	180	45	70	95	120	140	180
SRL10-2C	100	160	210	260	315	360	80	125	170	210	255	340	75	120	160	195	240	320

NR = Not Required. Maximum circuit length has been reached in a smaller breaker size.

Note — Thermal magnetic circuit breakers are recommended since magnetic circuit breakers could "nuisance trip" at low temperature.

SRL
Self-Regulating Low Temperature *(cont'd.)*

Ordering Information

Output (W/Ft.)	Volts	Model	Stock	PCN	Wt./1000' (Lbs.)
3 @ 50°F	120	SRL 3-1C	S	382678	53
		SRL 3-1CT	S	383400	66
		SRL 3-1CR	S	382731	64
	208 - 277	SRL 3-2C	S	382686	53
		SRL 3-2CT	S	383419	66
		SRL 3-2CR	S	382740	64
5 @ 50°F	120	SRL 5-1C	S	382694	53
		SRL 5-1CT	S	383443	66
		SRL 5-1CR	S	382758	64
	208 - 277	SRL 5-2C	S	382707	53
		SRL 5-2CT	S	383451	66
		SRL 5-2CR	S	382766	64
8 @ 50°F	120	SRL 8-1C	S	382555	53
		SRL 8-1CT	S	383460	66
		SRL 8-1CR	S	382598	64
	208 - 277	SRL 8-2C	S	382563	53
		SRL 8-2CT	S	383478	66
		SRL 8-2CR	S	382600	64
10 @ 50°F	120	SRL 10-1C	S	382820	53
		SRL 10-1CT	S	383486	66
		SRL 10-1CR	S	382846	64
	208 - 277	SRL 10-2C	S	382838	53
		SRL 10-2CT	S	383494	66
		SRL 10-2CR	S	382854	64

To Order — Specify length, model, PCN and installation accessories.

Accessories

Accessories		U Series	DL	EL
Power Connection	Heat trace to electrical service connection	UPC	RTPC	SSK
Splice & Tee		UMC	RTST	RT-RST
End Seal	For terminating cable	UES	RTES	RT-RES
Lighted End Seal		USL	RTST-SL	N/A
Thermostat	Ambient air sensing thermostat	UAS	RTAS	THL/TXL
	Line sensing mechanical thermostat	UBC	RTBC	THR/TXR

To Order — General Application & Installation Accessories such as tape, pipe straps, warning labels, etc., refer to the U Series, DL & EL General Application Accessories page at the end of this section.

Ordering Information

To Order — *Complete the Model Number using the Matrix provided.*

Contact your Local Chromalox Sales office for monitor wire option.

Model	Self-Regulating Low Temperature
SRL	Self-Regulating, Low Temperatue Heating Cable

Code	Output (W/Ft.)
3	Three
5	Five
8	Eight
10	Ten

Code	Voltage
1	120
2	208 - 277

Code	Braid and Overcoat Options
C	Tin-Plated copper metallic braid for additional protection and ground path
CT	Fluoropolymer corrosion resistant overjacket over braid for hostile/corrosive environments
CR	TPR overjacket over braid for protection against certain inorganic chemical solutions

SRL	5	1	C	Typical Model Number

More Information is Available Online on Heat Trace.

Bookmark Your Browser to ***www.chromalox.com*** *and Select* ***Manuals.***

About Heat Cable, Tape, and Rope

Heat cable can be used to maintain the temperature and viscosity of process fluids, protect pipes from freezing, and keep roofs and gutters free from snow and ice buildup.

Use fiberglass tape to secure heat cable onto pipes (see 7574A on page 3415). You should also wrap insulation around the pipe to protect the cable and ensure maximum heat output (see 5556K on page 3489).

Total watt output = cable length × watts/ft.
Amp draw = total watt output ÷ volts

Self-Regulating Heat Cable—Adjusts its power output in relation to surface as well as ambient (surrounding) temperatures. The hotter the ambient temperature, the lower the wattage output. As a result, no temperature controlling device is needed unless a specific, consistent temperature is desired.

Constant-Wattage Heat Cable—Always puts out the designated amount of watts per foot, no matter what the ambient (surrounding) temperature is. Because it's designed to continually supply wattage into the object being heated, it should be used with a temperature controlling device to prevent burnout. This also lets you maintain more precise temperatures.

Note: Constant-wattage cable cannot be overlapped. There must not be air gaps between the cable and the surface to be heated.

Watts/ft. Needed for Temperature Change

Temperature rise is the fluid temperature you need to maintain minus the minimum ambient (surrounding) temperature. Watts/ft. ratings are based on using fiberglass insulation.

Watts/ft. Needed for Temperature Change							
Temp. Rise	Insulation Thickness	Pipe Size					
		½"	¾"	1"	1¼"	1½"	2"
50° F	1"	1.7	1.9	2.2	2.5	2.8	3.3
50° F	1½"	1.3	1.5	1.7	1.9	2.1	2.5
50° F	2"	1.2	1.3	1.4	1.6	1.8	2
100° F	1"	3.5	3.9	4.5	5.3	5.8	6.8
100° F	1½"	2.8	3.1	3.5	4.1	4.4	5.1
100° F	2"	2.4	2.7	3	3.4	3.7	4.3
200° F	1"	7.5	8.6	9.9	11.5	12.6	14.9
200° F	1½"	6.1	6.8	7.7	8.9	9.7	11.2
200° F	2"	5.3	5.9	6.6	7.5	8.1	9.3

For example, to maintain a fluid temperature of 150° F with a minimum ambient temperature of 50° F (for a temperature change of 100° F), 1½" of insulation, and a 1" pipe, you need a heat cable with at least 3.5 watts/ft.

Power-Saving Heat Cable

The internal conductive core of this self-regulating cable adjusts power use based on the temperature. The colder it gets, the greater the heat output; as the temperature increases, the heat output automatically decreases. Requires the power-connection kit (sold separately) for hardwiring. To turn unit on and off, a temperature controller is recommended (see pages 590-592). Use on metal and plastic pipes for freeze protection and low temperature process maintenance. All cable has 16-ga., plated copper bus wires encased in a self-regulating, conductive core. The cable has a tinned-copper overbraid to provide a low-resistance ground.

Voltage is single phase. Cable can be safely overlapped but is not suitable for burying underground. UL listed, CSA certified, and FM approved Class I, Div. 2, Groups B, C, and D (unless noted).

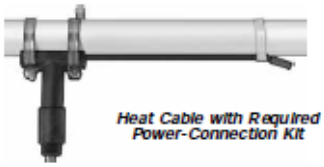

Heat Cable with Required Power-Connection Kit

Heat Cable

Cable with jacket has a fluoropolymer outer covering that's designed for corrosive environments.

Low-Temperature Heat Cable—Maximum heat output is 150° F. Exposure temperature range is −40° to +185° F. *Standard cable* measures approximately 13/32" Wd. × 3/16" Thick. *Cable with jacket* measures approximately 29/64" Wd. × 7/32" Thick.

Medium-Temperature Heat Cable—Maximum heat output is 250° F. Exposure temperature range is −40° to +250° F. Cable measures approximately 13/32" Wd. × 3/16" Thick. Not CSA certified or FM approved.

Medium-Temperature Heat Cable with High Exposure Temperature—Maximum heat output is 250° F. Exposure temperature range is −40° to +375° F. *Standard cable* measures approximately 3/8" Wd. × 5/32" Thick. *Cable with jacket* measures approximately 13/32" Wd. × 3/16" Thick.

Watts/ft.	120 VAC Max. Lg.	120 VAC Standard	120 VAC Standard Per Ft.	120 VAC With Jacket	120 VAC With Jacket Per Ft.	240 VAC Max. Lg.	240 VAC Standard	240 VAC Standard Per Ft.	240 VAC With Jacket	240 VAC With Jacket Per Ft.
Low-Temperature Heat Cable										
3	325 ft.	3597K52	$4.10	3597K63	$5.57	650 ft.	3597K53	$4.79	3597K64	$7.08
5	270 ft.	3597K56	4.81	3597K67	6.35	540 ft.	3597K57	5.46	3597K68	8.05
8	210 ft.	3597K58	4.95	3597K69	7.11	420 ft.	3597K59	6.07	3597K71	8.53
10	180 ft.	3597K61	6.20	3597K72	7.63	360 ft.	3597K62	7.51	3597K73	6.74
Medium-Temperature Heat Cable										
10	190 ft.	—	—	3597K81	10.89	375 ft.	—	—	3597K82	11.51
15	135 ft.	—	—	3597K83	11.44	270 ft.	—	—	3597K84	12.00
20	105 ft.	—	—	3597K85	11.80	210 ft.	—	—	3597K86	12.43
Medium-Temperature Heat Cable with High Exposure Temperature										
3	395 ft.	36005K29	9.13	—	—	—	—	—	—	—
5	310 ft.	36005K31	10.13	36005K41	12.16	—	—	—	—	—
8	225 ft.	36005K32	10.84	36005K42	12.39	—	—	—	—	—
10	190 ft.	36005K33	11.32	36005K43	13.35	375 ft.	36005K63	12.29	—	—
12	170 ft.	36005K34	13.71	36005K44	15.10	335 ft.	36005K64	14.74	36005K74	15.84
15	135 ft.	36005K35	14.55	36005K45	17.58	—	—	—	—	—
18	125 ft.	36005K11	16.41	36005K13	19.43	245 ft.	36005K12	17.13	36005K14	20.33
20	105 ft.	36005K37	17.10	36005K47	20.68	210 ft.	36005K67	18.45	36005K77	21.42

Connection Kits

Power-Connection Kit—Includes parts necessary to connect power to a run of cable. Includes standoff for connection to an electrical box, and parts to allow connection to the end of the cable. Use with both low- and medium-temperature cable.

3597K99 ..... Each $54.08

Cable-Extension Kits—Contain parts to let you add new cables to the end of an existing cable. *Low temp. kit* includes shrink tube and splices to add up to two lengths to an existing cable. *Medium temp. kit* contains parts to add one length to an existing cable.

For Low Temp. ..... 3597K28 Each $31.39
For Medium Temp. ..... 3597K93 Each $54.08

Additional-Cable Kit—Contains the parts to connect and terminate three additional runs of cable to an existing electrical box. Requires the power-connection kit to be previously installed.

3597K25 ..... Each $15.12

Ready-to-Use Power-Saving Heat Cable

An included 30" power cord makes this cable ready to use and eliminates the need for termination and power kits. Cable is self-regulated so it does not require a temperature controller. The colder it gets, the higher the heat output; as the temperature increases, the heat output automatically decreases. Use for freeze protection on plastic and metal pipes up to 2½" dia. Cable can be safely overlapped. Made of nickel-plated copper bus wire and a tinned-copper braid with waterproof polyolefin cover. Size is 7/16" Wd. × 3/16" Thick. Maximum heat output is 120° F. Exposure temperature range is −40° to +150° F. Watts/ft. rating is 6 @ 40° F. UL listed and CSA certified for pipe heating. Voltage is single phase. ***120-VAC*** cable includes a standard three-prong plug. It is also UL listed and CSA certified for roof and gutter de-icing applications. ***240-VAC*** cable has three stripped leads for hardwiring.

120 VAC

120 VAC Lg.	Watts	Amps		Each	120 VAC Lg.	Watts	Amps		Each
6 ft.	30	0.25	3580K22	$40.90	50 ft.	250	2.08	3580K31	$136.41
12 ft.	60	0.5	3580K24	51.89	75 ft.	375	3.13	3580K32	191.24
18 ft.	90	0.75	3580K26	64.92	100 ft.	500	4.17	3580K33	237.03
24 ft.	120	1	3580K28	77.61					

240 VAC Lg.	Watts	Amps		Each
6 ft.	30	0.13	3580K52	$40.86
12 ft.	60	0.25	3580K54	53.86
18 ft.	90	0.38	3580K56	66.42
24 ft.	120	0.5	3580K58	80.64

Constant Wattage Heat Trace Cable

FE Style Heating Cable **Maximum Temperature:** 400°F (204°C)

The FE Style cable heating element is tension wrapped and covered with a fluorocarbon film and enclosed in a minimum 20 mm Teflon® FEP abrasion resistant extruded jacket. This tough outer cover provides moisture and dielectric protection as well as resistance to abrasion. A layer of tinned copper braid is then applied to meet NEC code and to provide mechanical protection as well as a low resistance to ground.

Design Features

- ***Temperature Exposure Rating 400°F (204°C)***
- ***Ease of installation—cut to length at the job site***
- ***Moisture and chemical resistant***
- ***Stands up to repeated handling and flexing***
- ***Field proven industrial grade construction***
- ***Single end power connection***

Agency Approvals

- **Factory Mutual**
  Ordinary Locations
  Hazardous Locations;
  Class I, Division 2, Groups B, C & D
  Class II, Division 2, Groups E, F & G
  Class III, Division 2
- **CSA (120 and 240 VAC only)**
  Ordinary Locations
  Hazardous Locations;
  Class I, Division 2, Groups B, C & D
  Class II, Division 2, Groups F & G
  Class III, Division 2

Applications

- *Mid-Temperature Control*
- *Food Processing Plants*
- *Freeze Protection*
- *Chemical Processing Plants*
- *Hazardous Locations*
- *Water Lines/Condensate Return Lines*

Specifications

Voltages Available: 120, 208, 240, 480V
Wattages: 3, 5, 8, 12 (W/ft.)
Outside Dimensions: Nom. .300" × .200"
Exposure Rating: 400°F (204°C)
De-Energized: 450°F (232°C)
Standard Metal Overbraid: Tinned Copper (Optional Stainless Steel)
Moisture and Chemical Resistance: Excellent
Flame Resistance: Outstanding
Radiation Resistance: Fair to Good

Ordering Information

Tempco's FE Constant Wattage Heat Trace Cable is sold by part number and length. The cable part number is put together as follows:

H T P 0 2

Wattage—watts/ft.
3 W/ft. = 3
5 W/ft. = 5
8 W/ft. = 8
12 W/ft. = 2

Voltage
120 VAC = 1
240 VAC = 2
208 VAC = 3
480 VAC = 4

Options
None = 0
3 = Stainless Steel Overbraid

Note: Due to code requirements, FE cable has a metal overbraid.

Self-Limiting Heat Trace Cable

Tempco's Self-Limiting Heating Cables are all parallel resistance, low watt density electrical heaters designed to be cut to the desired lengths in the field, eliminating the need for prefabrications and reducing or eliminating many design and installation costs. No special training is required.

Self-limiting heating cables are designed and built to regulate their output. As the process temperature drops, the cable's output increases; conversely, as the temperature rises, the cable's output decreases.

The self-limiting core is in essence an infinite number of parallel resistors that permit the cable to be cut to any length without creating cold sections. Because it is self-regulating and infinitely parallel, the output varies along the length of the cable, depending upon local process temperature.

Metal overbraid is provided on all heat trace cabling to meet NEC code for grounding. The braid provides mechanical protection, as well as a low resistance grounding path.

On SL self-limiting cable, in addition to the standard metal overbraid, an optional thermoplastic elastomer or fluoropolymer outer jacket is recommended when exposure to organic chemicals or corrosives is expected.

Self-limiting heating cable provides safe, reliable heat tracing for process temperature maintenance and freeze protection of pipes, valves and similar applications.

Design Features

- *Efficient, Safe, Easy to Install*
- *Maintenance Temperatures up to 150°F (65°C)*
- *Can Be Overlapped*
- *Cut to Length at the Job Site*

Applications

- *Pipelines*
- *Drains*
- *Water Lines*
- *Safety Showers*
- *Sprinkler Systems*

Specifications

Voltages Available: 120, 240

Wattages: 3, 5, 8, 10 (W/ft.)

Outside Dimensions: Nom. .450" × .130"

Exposure Rating: 150°F (65°C)

De-Energized: 185°F (85°C)

Standard Metal Overbraid: Tinned Copper or optional Stainless Steel

Moisture Resistance: Excellent

Chemical Resistance: Good

Flame Resistance: Good

Radiation Resistance: Fair

Agency Approvals

- **CSA**
- **IEEE Std 515 RU**
- **Factory Mutual**
  Ordinary Locations
  Hazardous Locations;
  Class I, Division 2, Groups B, C & D
  Class II, Division 2, Groups F & D
  Class III, Division 1 and Division 2

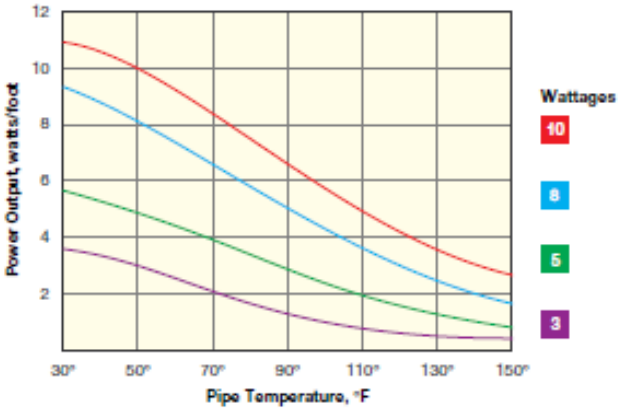

SL Style Heating Cable

The SL Style cable heating element is a low watt density parallel circuit electrical heater. The multi-stranded bus wires are extruded in an irradiated self-regulating conductive polyolefin that increases and decreases its heat output with changes in the ambient temperature. A flame retardant thermoplastic elastomer jacket is added for abrasion and impact resistance.

A metal braided shield is then applied to meet NEC code for grounding. Metal overbraid heaters are FM approved for use in hazardous areas.

An optional fluoropolymer outer jacket is also available. This outer jacket should be specified when the metal braided cable is installed in corrosive environments.