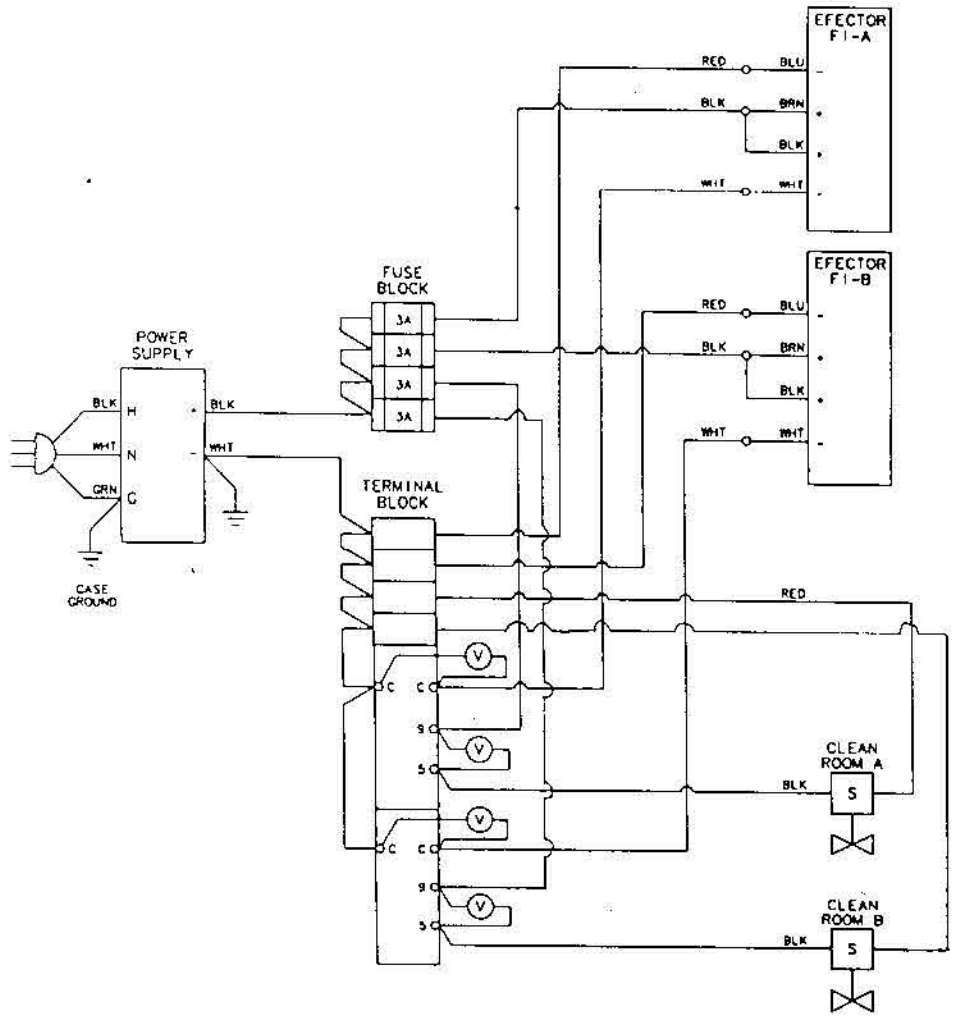

FERMI NATIONAL ACCELERATOR LABORATORY
UNITED STATES DEPARTMENT OF ENERGY

BEAMLINE STRUCTURES/OTHER
ASSEMBLY BUILDING
LAB 3 CLEAN ROOM FRESH AIR ALARM

SCALE | DRAWING NUMBER 19203 000-ED-444714 | SHEET 1 OF 1 | REV

CREATED WITH | GROUP PRO/MECHANICAL DEPARTMENT