Fermilab

Particle Physics Division
Mechanical Department Engineering Note

Number: MD-ENG-290 Date: 10-26-10

Project Internal Reference:

Project: NOvA

Title: FHEP Table Hilman Rollers

Author(s): Mike Zuckerbrot

Reviewer(s):

Key Words: FHEP, block pivoter , Hilman roller

Applicable Codes: AISC Manual of Steel Construction, Allowable Stress Design

Abstract Summary:

The FHEP pivoter table's existing back legs and leg connections will be analyzed for applicable compressive and bending stresses while rolling on 15 ton capacity Hilman's; A set of 15 ton capacity Hilman rollers and legs will be designed and analyzed for the front of the table as well

Table of Contents

List of Figures	3
Abstract	4
Existing Structure	5
Center of gravity dimensions	6
Reaction Loads	7
Hilman roller selection and dimensions	8-9
Back legs and rollers	10
-Section properties and width/thickness ratios	10
-Compressive stress	11
-Flexural stress	12
-Combined stresses	12
-Table connection stresses	13
-Hilman connection stresses and detail	14
Front legs and rollers	16
-Leg assembly details	17
-Section properties and width/thickness ratios	17-18
-Compressive stress	18-19
-Flexural stress	19
-Combined stresses	20
-Minimum weld length	21
Summary and Conclusions	21
Appendix with eng. Drawings	22-25

Figures

Figure 1; FHEP table, block, and pallet 5

Figure 2; Existing legs 5

Figure 3; Center of gravity and simple beam 6

Figure 4; Available Hilman rollers 8

Figure 5; 15 ton Hilman roller specification 9

Figure 6; Free body diagram of existing legs' top plate 13

Figure 7; Hilman roller with tapped holes and dimensions 14

Figure 8; Existing legs' modified top plate with dimensions 15

Figure 9; New front legs shown mounted to the table 16

Figure 10; Front leg assembly and dimensions 17

Appendix

-Existing back leg and base plate 22
-Modified Hilman roller 23
-Front legs 24
-Bottom table plate 25

Abstract

The FHEP pivoter table, 31 plane block, and steel pallet, will be considered as one rigid structure with a weight of 77,428 #. The table has 2 existing back legs (W8x35 beams) with base plates, and needs an additional 2 front legs which will all be designed and analyzed for stresses in the beams and in the connections. A 5% normal force will be used as a dynamic horizontal load for each leg. Several safety factors are used throughout the calculations intended to encompass both unexpected additional weight, and a potentially moving center of gravity. All materials will be assumed at 36 ksi yield strength, and a modulus of elasticity of 30 x . The Hilman rollers are sized to 15 metric ton capacity for the front and back, with the existing legs proving to be sufficiently strong and the base plate needing modification. A 4x3x1/2'' angle should be added across the existing legs to prevent torsional loading and buckling.

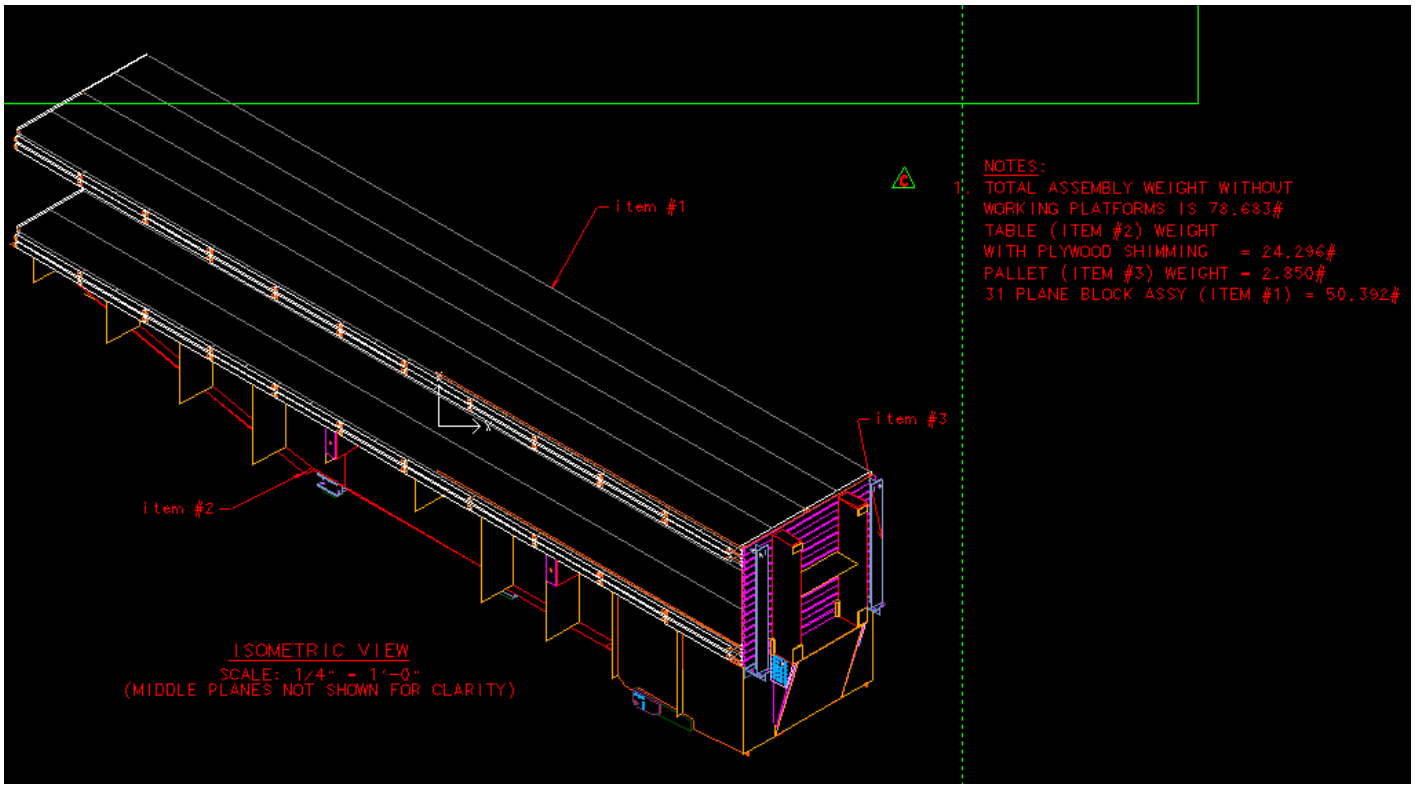

Figure 1: FHEP table (item #2) with pallet (item #3) and block assembly (item 3), with associated weights listed. Existing back legs are not included but shown in figure 2.

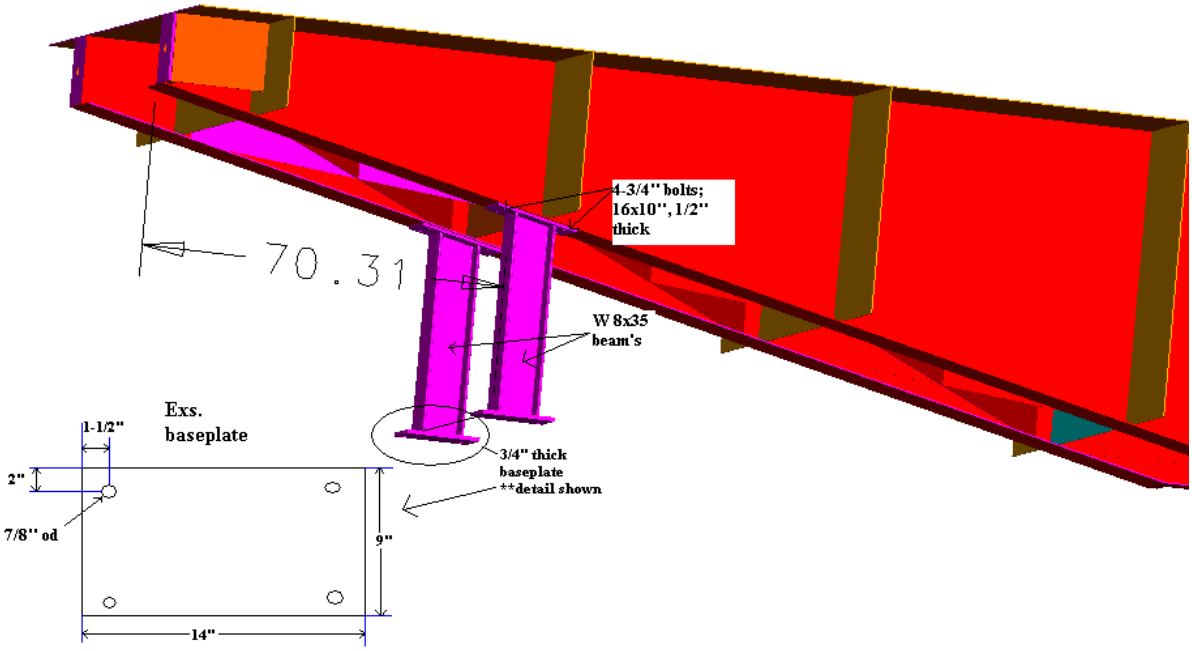

Figure 2: Existing back legs shown with base plate detail. The 70.31'' dimension shown is from the front face of the W8x35 beams to the back of the table. Engineering drawings are located in the Appendix

Center of Gravity

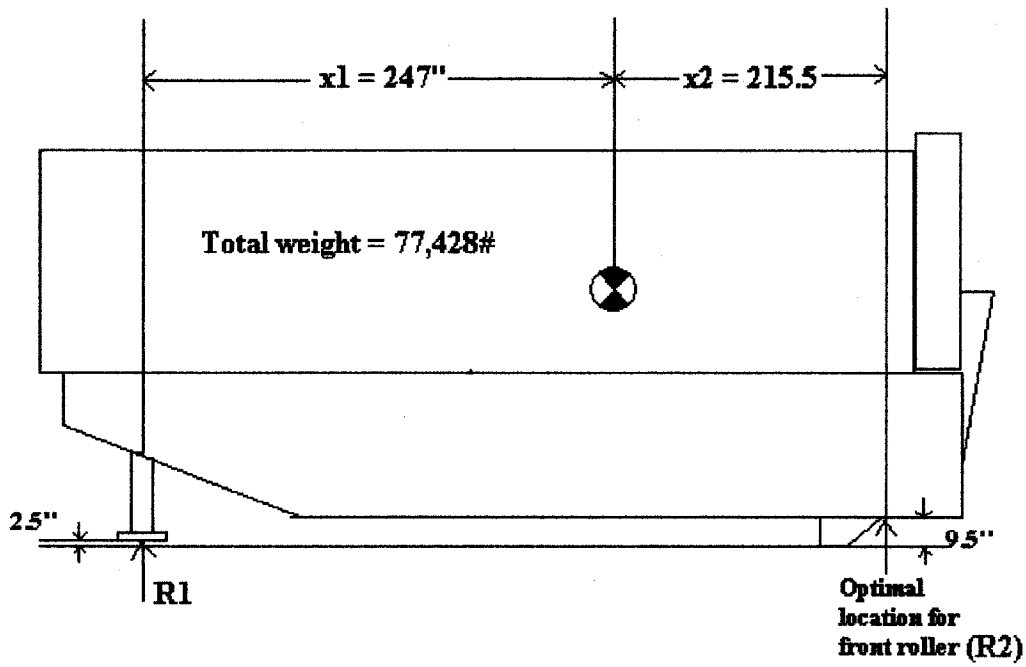

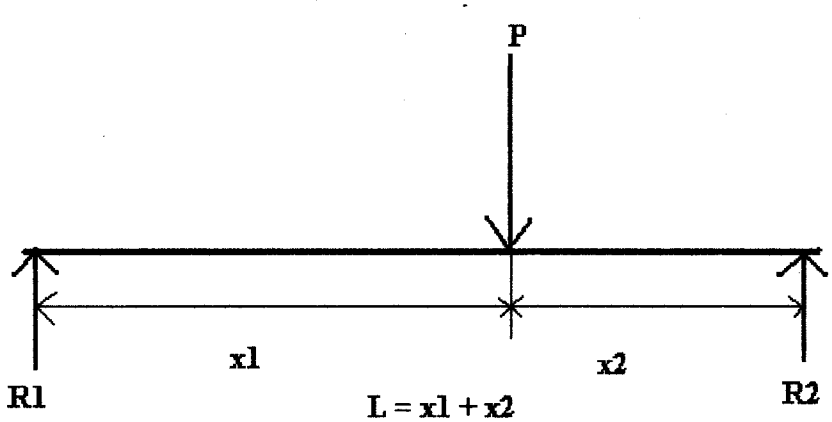

$$R1 = \frac{P*x2}{L} \qquad R2 = \frac{P*x1}{L}$$

Figure 3: Top- Ideas' computed center of gravity location and distances to reaction loads.

Bottom- Simplified beam and reaction equations.

Reaction Loads

$$R1 = \frac{P*x2}{L}$$

$$R1 = \frac{77{,}428\#*211.5''}{465.5''} = 35{,}878\#$$

$$R2 = \frac{P*x1}{L}$$

$$R2 = \frac{77{,}428\#*247''}{465.5''} = 41{,}894\ \#$$

Loads to be used in analysis

*Vertical loads will be rounded up as an additional safety factor

*Horizontal loads will be estimated at 5% of the normal load

$$R1_{vert} \approx 20{,}000\#\ per\ back\ leg$$

$$R1_{horz} \approx 20{,}000\# * (5\%) = 1{,}000\#\ per\ back\ leg$$

$$R2_{vert} \approx 22{,}000\#\ per\ front\ leg$$

$$R2_{horz} \approx 22{,}000\# * (5\%) = 1{,}100\#\ per\ front\ leg$$

Available Hilman rollers

Capacity (Tons)	Product Number	Top Style	Height in	mm	Width* in	mm	Length in	mm	Weight lb	kg	Contact Rolls
3.75*	3.75-SLP		5	127	5-3/4	146	10-1/2	267	34	15	5
7.5*	7.5-SLP	Swivel	5-1/4	133	5-3/4	146	10-1/2	267	38	17	5
10*	10-SLP	Locking	5-1/4	133	5-3/4	146	10-1/2	267	38	17	5
15	15-SLP	Padded	5-1/8	130	6-3/8	162	12-3/4	324	49	22	5
30*	30-SLP		8	203	8	203	15	381	122	55	5
50*	50-SLP		8-15/16	227	8	203	21	533	193	88	7
3.75*	3.75-SLD	Swivel	4-3/4	121	5-3/4	146	10-1/2	267	34	15	5
7.5*	7.5-SLD	Locking	5	127	5-3/4	146	10-1/2	267	37	17	5
10*	10-SLD	with	5	127	5-3/4	146	10-1/2	267	37	17	5
15	15-SLD	Diamond	4-7/8	124	6-3/8	162	12-3/4	324	49	22	5
30	30-SLD	Steel	7-1/32	179	8	203	15	381	118	54	5
50	50-SLD	Grid	8-1/16	205	8	203	21	533	189	86	7
3.75*	3.75-SLS		4-5/8	117	6	152	10-1/2	267	35	16	5
7.5*	7.5-SLS	Swivel	4-7/8	124	6	152	10-1/2	267	38	17	5
10*	10-SLS	Locking	4-7/8	124	6	152	10-1/2	267	38	17	5
15	15-SLS	with	4-3/4	121	6-3/8	162	12-3/4	324	50	23	5
30	30-SLS	Smooth	7-15/16	202	8	203	15	381	119	54	5
50	50-SLS	Steel	7-15/16	202	8	203	20-7/8	530	191	87	7
.75	.75-SP	Swivel	3-5/16	84	3-5/8	92	6-1/2	165	9	4	5
2	2-SP	Padded	3-15/16	100	4-1/8	105	6-1/2	165	15	7	4
.75	.75-RP		3-1/8	79	3-5/8	92	6-1/2	165	9	4	5
2	2-RP		3-5/8	92	4-1/8	105	6-1/2	165	15	7	4
3.75*	3.75-RP		4-3/16	106	5-3/4	146	10-1/2	267	29	13	5
7.5*	7.5-RP	Rigid	4-7/16	113	5-3/4	146	10-1/2	267	33	15	5
10*	10-RP	Padded	4-7/16	113	5-3/4	146	10-1/2	267	33	15	5
15	15-RP		4-5/16	110	6-3/8	162	12-3/4	324	42	19	5
30*	30-RP		6-3/4	171	8	203	15	381	107	49	5
50*	50-RP		7-3/4	197	8	203	21	533	179	81	7
3.75*	3.75-RD		4-1/16**	103	5-5/8	143	10-1/2	267	29	13	5
7.5*	7.5-RD	Rigid	4-5/16**	110	5-5/8	143	10-1/2	267	32	15	5
10*	10-RD	with	4-5/16**	110	5-3/4	146	10-1/2	267	32	15	5
15	15-RD	Steel	4-3/32**	104	6-3/8	162	12-3/4	324	38	17	5
30*	30-RD	Spikes	6-1/8**	156	8	203	15	381	105	48	5
50*	50-RD		7-1/8**	181	8	203	21	533	176	80	7
.75	.75-RS		2-3/4	70	3-5/8	92	6-1/2	165	8	4	5
2	2-RS		3-1/4	83	4-1/8	105	6-1/2	165	15	7	4
3.75*	3.75-RS	Rigid	3-11/16	94	5-5/8	143	10-1/2	267	29	13	5
7.5*	7.5-RS	with	3-15/16	100	5-5/8	143	10-1/2	267	32	15	5
10*	10-RS	Smooth	3-15/16	100	5-5/8	143	10-1/2	267	32	15	5
15	15-RS	Steel	3-13/16	97	6-3/8	162	12-3/4	324	43	20	5
30*	30-RS		5-3/4	146	8	203	15	381	105	48	5
50*	50-RS		6-3/4	171	8	203	21	533	176	80	7

* Width dimension of top exceeds roller frame width
** Height to top of spike

Figure 4: Available Hilman rollers, a ***rigid roller with a smooth steel*** *top will allow for straight linear motion, and for a bolted semi-permanent connection to the Hilman's top plate.*

*An additional safety factor of 1.25 will be used on the capacities of the rollers due to unforeseen weights or a shifting CG.

10 metric ton capacity → 10 tons * 2205 lbs/ton / 1.25 SF = 17,640 # capacity (***to low***)

15 metric ton capacity → 15 tons * 2205 lbs/ton / 1.25 SF = 26,460 # capacity (***ok***)

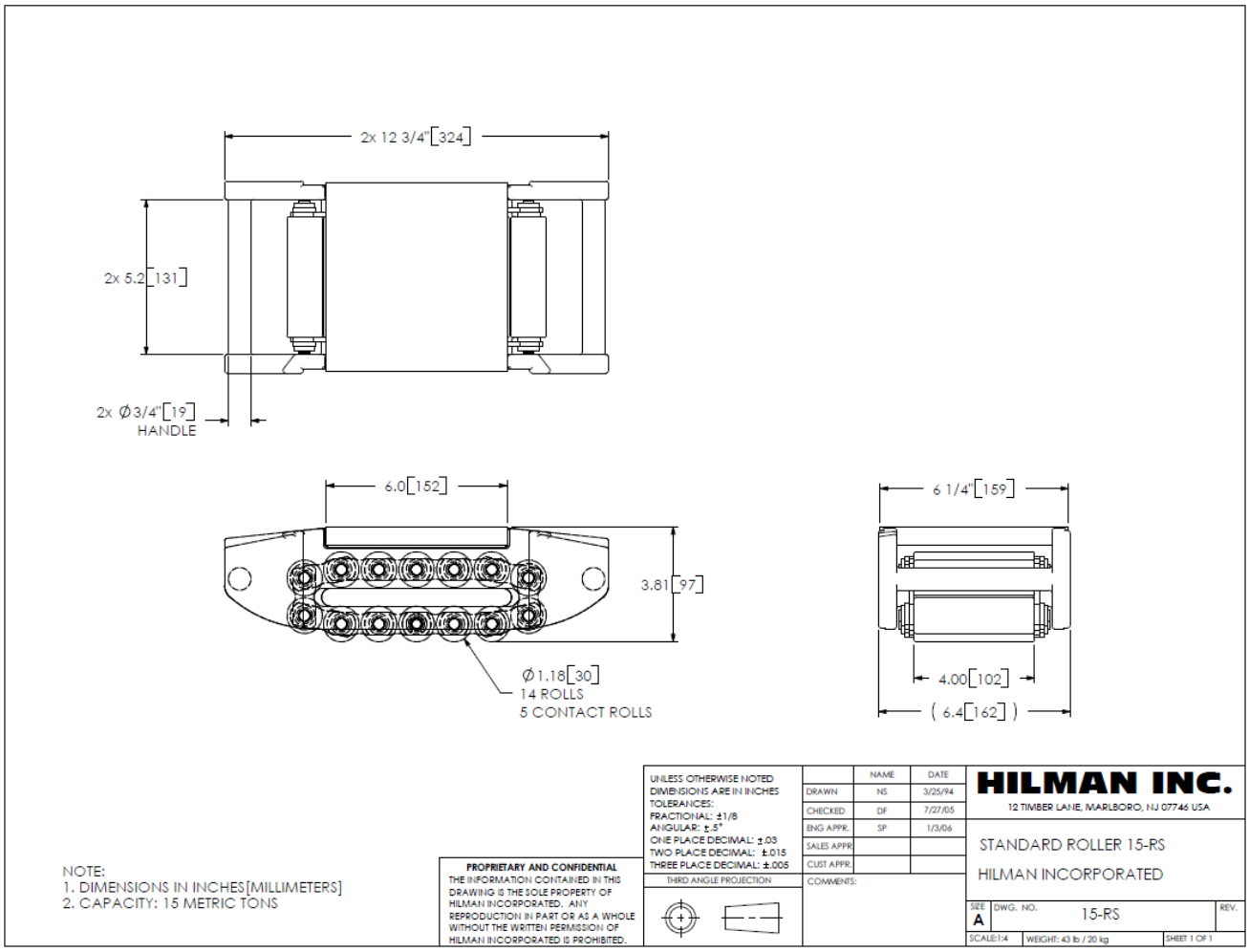

Figure 5: 15 metric ton capacity Hilman roller specifications.

Existing Back Legs (R1)

*Section properties, width/thickness ratios, and all equations from AISC Manual of Steel Construction-Allowable Stress Design 9th edition

→<u>W8x35 beam section properties</u>

-A = 10.3 in^2

-$I_{xx} = 127\ in^4$

-$I_{yy} = 42.6\ in^4$

-$r_x = 3.51\ in$

-$r_y = 2.03\ in$

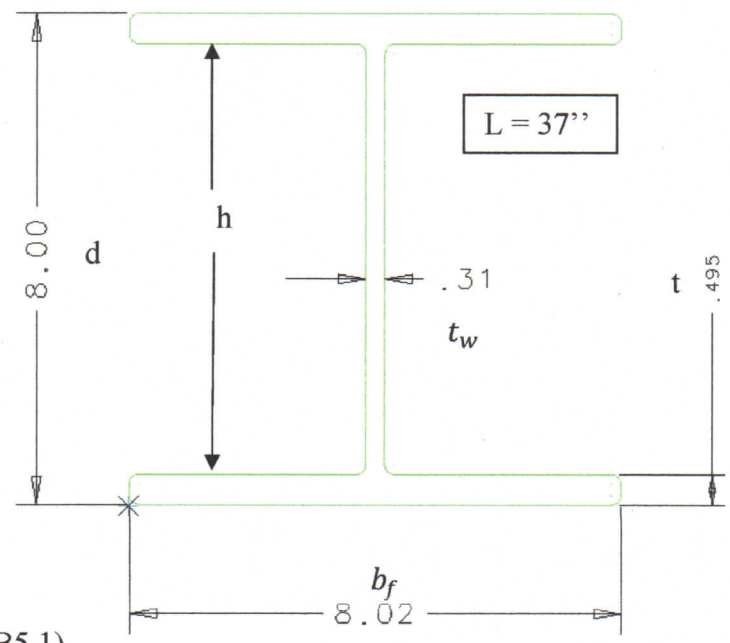

→<u>Limiting width/thickness ratios</u> (Table B5.1)

*The flange is an unstiffened element supported along one edge parallel to the compressive force; i.e. sec. B5.1 calls for $\mathbf{b} = \frac{1}{2}\boldsymbol{b_f}$ = 4.01. The web is a stiffened element supported along two edges parallel to the compressive force and all distances will be taken at their full nominal length.

-Flanges of I shaped rolled beams in flexure: $b_f/t \leq 65/\sqrt{F_y}$ (compact)

(4.01'')/(0.495'') = 8.1 ≤? $65/\sqrt{36ksi} = 10.8$ → *(flange is compact)*

-Uniformly compressed stiffened elements supported on two sides (web)

$h/t_w \leq 253/\sqrt{F_y}$ (noncompact)

(8-2*0.495)/(0.31) = 22.7 ≤? $253/\sqrt{36} = 42.2$ (ok)

-Webs in combined flexural and axial compression:

$$\text{for } {f_a}/{F_y} \dashrightarrow \left(\frac{20\ kips}{10.3\ in^2} \Big/ 36\ ksi = .054 \right) \leq ?\ 0.15 \text{ (true)} \rightarrow$$

$$d/t_w \leq 640/\sqrt{F_y}\,(1 - 3.74\, f_a/F_y) \text{ (compact)}$$

$$(8.12'')/(0.31'') = 26.2 \leq ?\ 640/\sqrt{36ksi}\,(1 - 3.71(0.054)) = 85.12 \textit{ web is compact}$$

→ <u>Compressive Stress</u>

*Slenderness ratio Kl/r should not exceed 200 for compression members (sec. B7); where K will be taken at unity, r is the smallest radius of gyration, and l is the greatest unbraced distance (37''), therefore:

Kl/r = 37''/2.03'' = 18.2

$$C_C = \sqrt{2\pi^2 E/F_y} = \sqrt{2\pi^2(30 * 10^3)/36} = 128.25$$

*With Kl/r < C_C , Allowable compressive stress is (sec. E2):

$$F_a = \frac{[1 - \frac{(\frac{Kl}{r})^2}{2C_C}]F_y}{\frac{5}{3} + \frac{3(Kl/r)}{8C_C} - \frac{(\frac{Kl}{r})^3}{8(C_C)^3}}$$

$$F_a = \frac{[1 - \frac{(18.2)^2}{2(128.25)}]36}{\frac{5}{3} + \frac{3(18.2)}{8(128.25)} - \frac{(18.2)^3}{8(128.25)^3}} = 20.7 \text{ ksi} = F_a$$

*The actual stress $f_a = R1_{vert}$/A = 20kips / 10.3 = **1.94 ksi = f_a**

* The actual compressive stress is well under the allowable limit.

→<u>Bending Stress</u>

*For strong axis bending of I shaped members with the greatest unbraced length $L_b < L_c$, the allowable bending stress is $F_b = 0.66F_y$

$$L_b = 37'' <? \; {}^{76b_f}\!/_{\sqrt{F_y}} \text{ and } {}^{20,000}\!/_{[({}^{d}/_{A_{flange}})]F_y}$$

$$(76*8.02)/(\sqrt{36}) = 101.6; \quad {}^{20,000}\!/_{[({}^{8.12}/_{8.02 * 0.495})36]} = 271.6$$

*With L_b (37″) < both L_c 's, the allowable bending stress is $F_b = 0.66F_y$

$F_b = 0.66F_y = 0.66*36 =$ **23.76 ksi = F_b**

*Actual bending stress $f_b = \frac{Mc}{I_x}$;

M = L*$R1_{horz}$ = 37''*1,000# = 37,000 #*in

C = 8.02/2 = 4.01'' ; $I_x = 127in^4$

$$f_b = \frac{37,000\#in*4.01''}{127in^4} = \mathbf{1.17\ ksi = f_b}$$

*Actual bending stress is well below the allowable limit

→<u>Combined Stresses</u>

*When $\frac{f_a}{F_a} \leq 0.15$; the following equation can be used:

$$\frac{f_a}{F_a} + \frac{f_{bx}}{F_{bx}} + \cancel{\frac{f_{by}}{F_{by}}} \leq 1$$

$$\frac{f_a}{F_a} = \frac{1.94}{20.7} = 0.09 \leq 0.15 \qquad \text{(the above equation is applicable)}$$

$$0.09 + \frac{1.17ksi}{23.76ksi} = 0.143 < 1.0$$

*combined stressed are well under the allowable limit

→Shear on bolts

- Both the top bolts connecting to the FHEP table at a 12.5° horizontal angle, and the bottom bolts which will connect to the Hilman will be analyzed for shear stress. To make the bottom connection to the Hilman **the existing base plate will need to be modified**, which will be detailed at the end of this section.

→Top, 12.5° angled bolts. These will have a constant shear due to the dead load, and a dynamic horizontal force ($R1_{horz}$) from forward movement ($R1_{vert}$). These two forces will be translated to the shear plane of the bolts to Fv' and Fh'. Bolts are A325 in bearing type connections, with the threads in the shear plane; giving and **allowable shear stress (F_v) of 21 ksi** (Table J3.2)

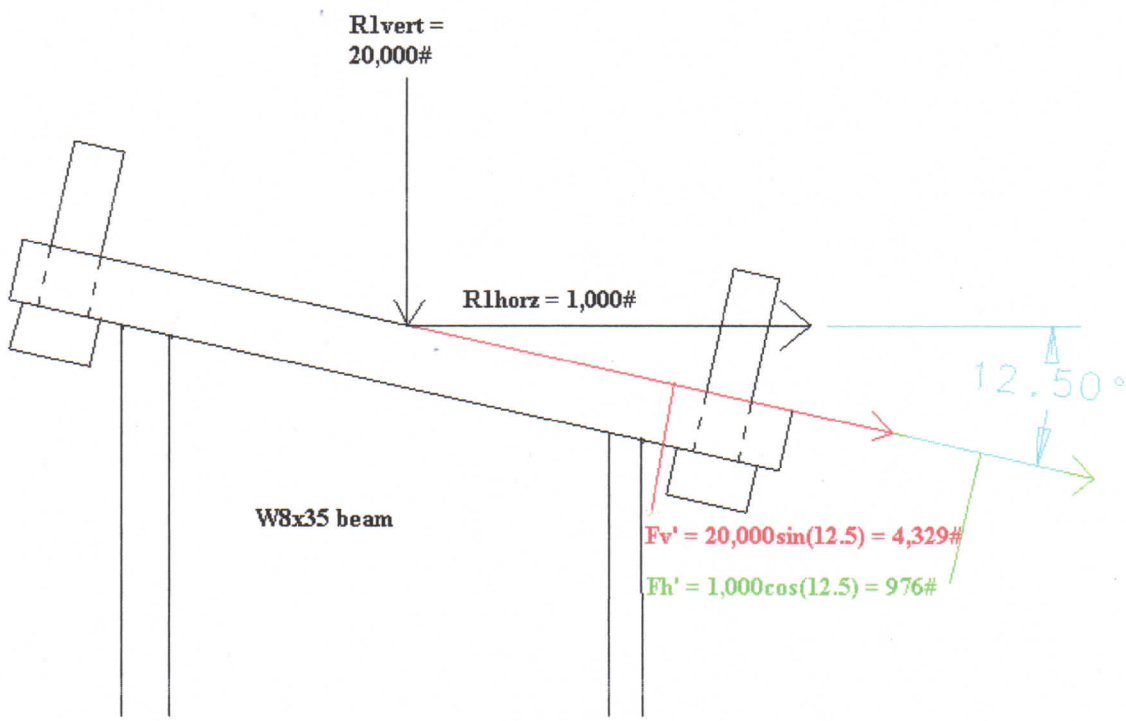

Figure 6: Free body diagram of the top plate with the vertical and horizontal loads shown in black, and the translated loads shown in red and green. There are 4, ¾'' bolts

-Total shear load on bolts F= Fv' + Fh' → 4329# + 976# = 5,305#

-Shear stress on bolts: f_v =F/A_{bolt} = $5{,}305\#/(4bolts * \frac{1}{4} * \pi * \left(\frac{3}{4}\right)^2)$ =**3 ksi =f_v,**

*Total shear stress on bolts,f_v, is much less than the allowable stress of 21ksi

→ **Bottom, Hilman connection bolts.** The top plate of the Hilman is 6-1/4'' x 6''

*The top plate of the Hilman will be drilled and tapped for a bolted connection (*Figure 7)*

*The existing base plate will need new through holes drilled to line up with the Hilman plate (*Figure 8)*

-The minimum bolt diameter will be reverse calculated based on a maximum stress of $\boldsymbol{F_v}$ = 21 ksi, and the higher of the horizontal shear loads, $R2_{horz}$, in order to be applicable to the front legs as well.

-Minimum bolt diameter: d_{min}, will be reverse calculated from $f_v = F_v$ = 21 ksi

$$21 \text{ ksi} = \frac{R2_{horz}}{(2\ bolts)*\frac{1}{4}*\pi*d_{min}{}^2} = \frac{1100\#}{(2\ bolts)*\frac{1}{4}*\pi*d_{min}{}^2} \rightarrow d_{min} = 0.183''$$

*2- ¾'' bolts will be sufficient for the shear forces, making the actual stress on these bolts $f_v = \frac{1100\#}{(2\ bolts)*\frac{1}{4}*\pi*0.75^2}$ = **1.24 ksi = $\boldsymbol{f_v}$**, well below the allowable stress of 21 ksi

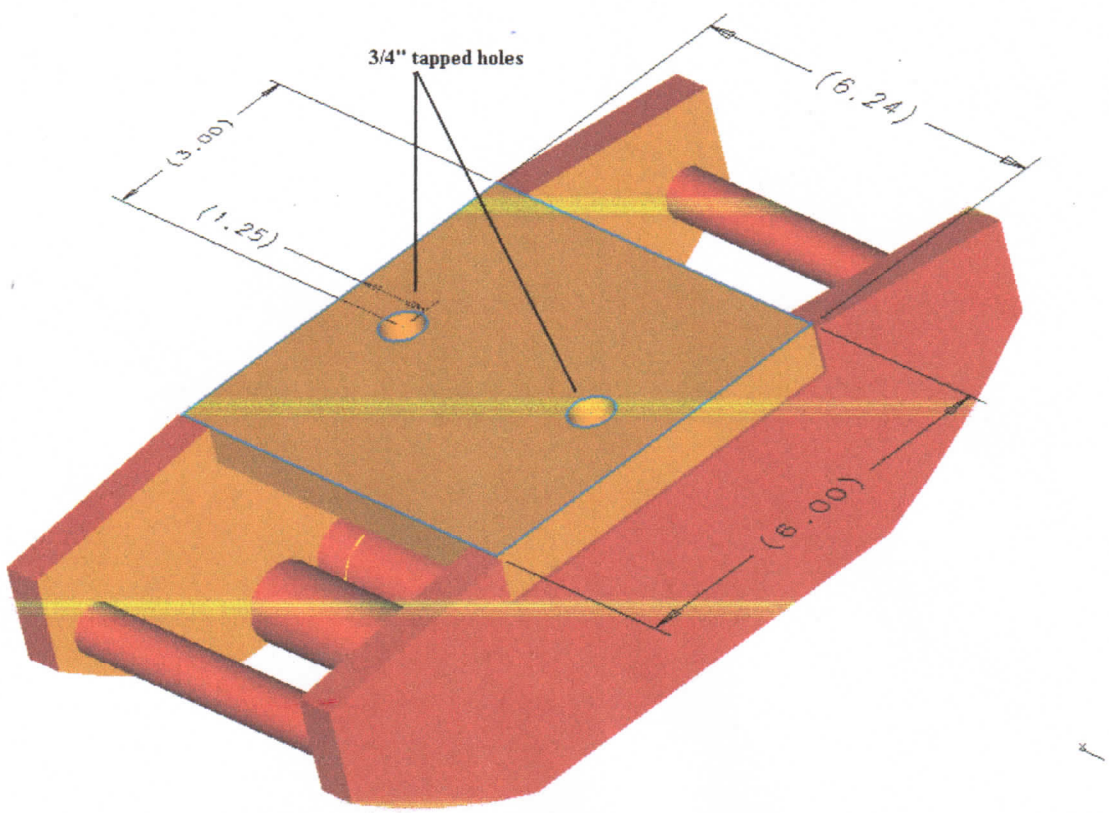

Figure 7: 15 ton capacity Hilman roller shown with 2- ¾'' tapped holes. Engineering drawing located in Appendix.

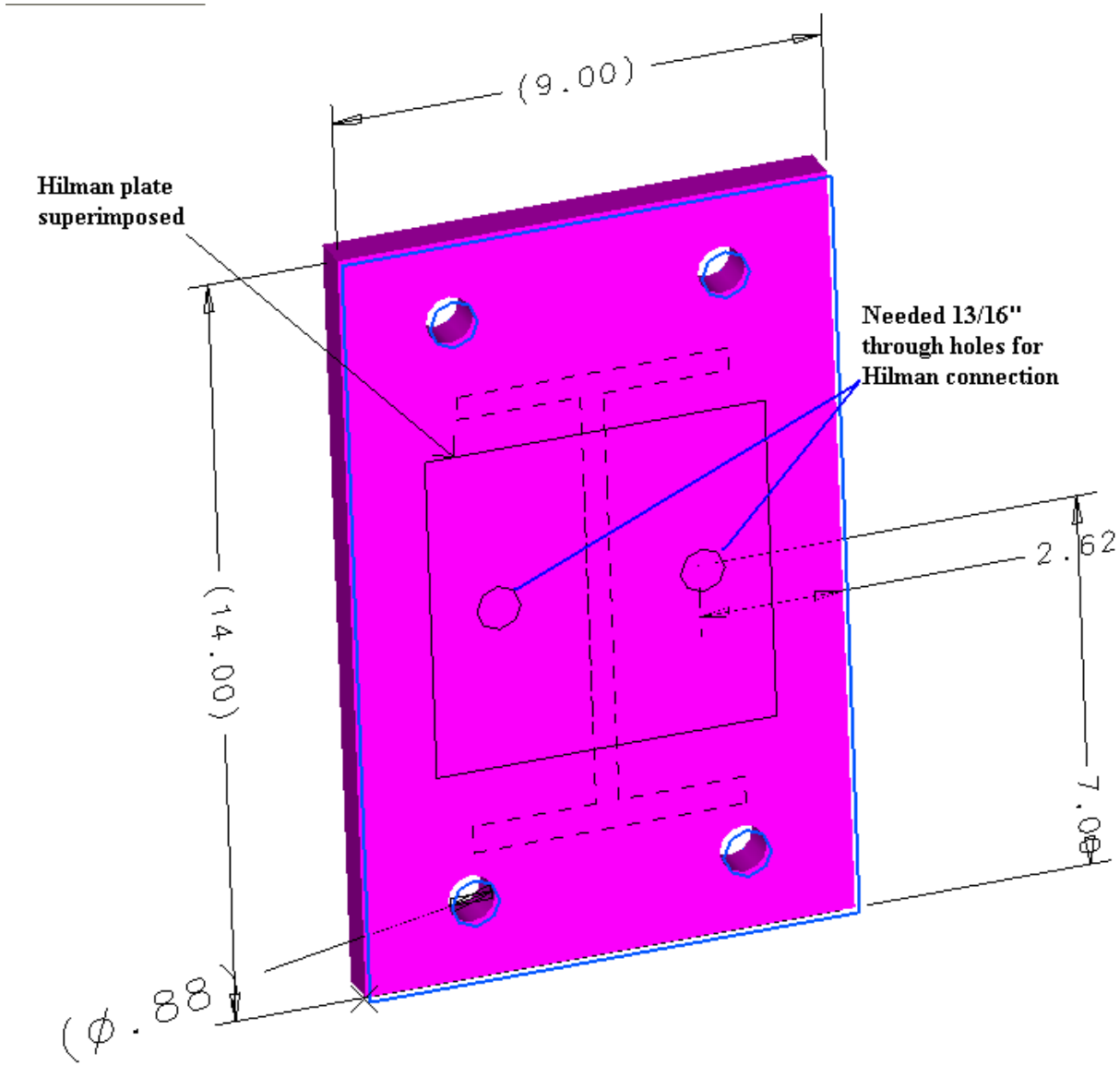

Figure 8: Existing base plate on the back legs shown with the Hilman plate superimposed. 2 new 13/16'' through holes will be made to bolt the base plate to the ¾'' tapped Hilman plate. Engineering drawing is located in the appendix.

Front Legs (R2)

*With the back set of Hilman mounted directly to the existing legs, a 7'' spacer leg is needed for the front set to keep the table level. A simple design of a W beam welded between two plates will be used. The W beam will be welded to the plates by a minimum weld length to be calculated, and the top and bottom plates of the leg will be bolted to Hilman and table respectively by the above determined 2 – ¾'' bolts.

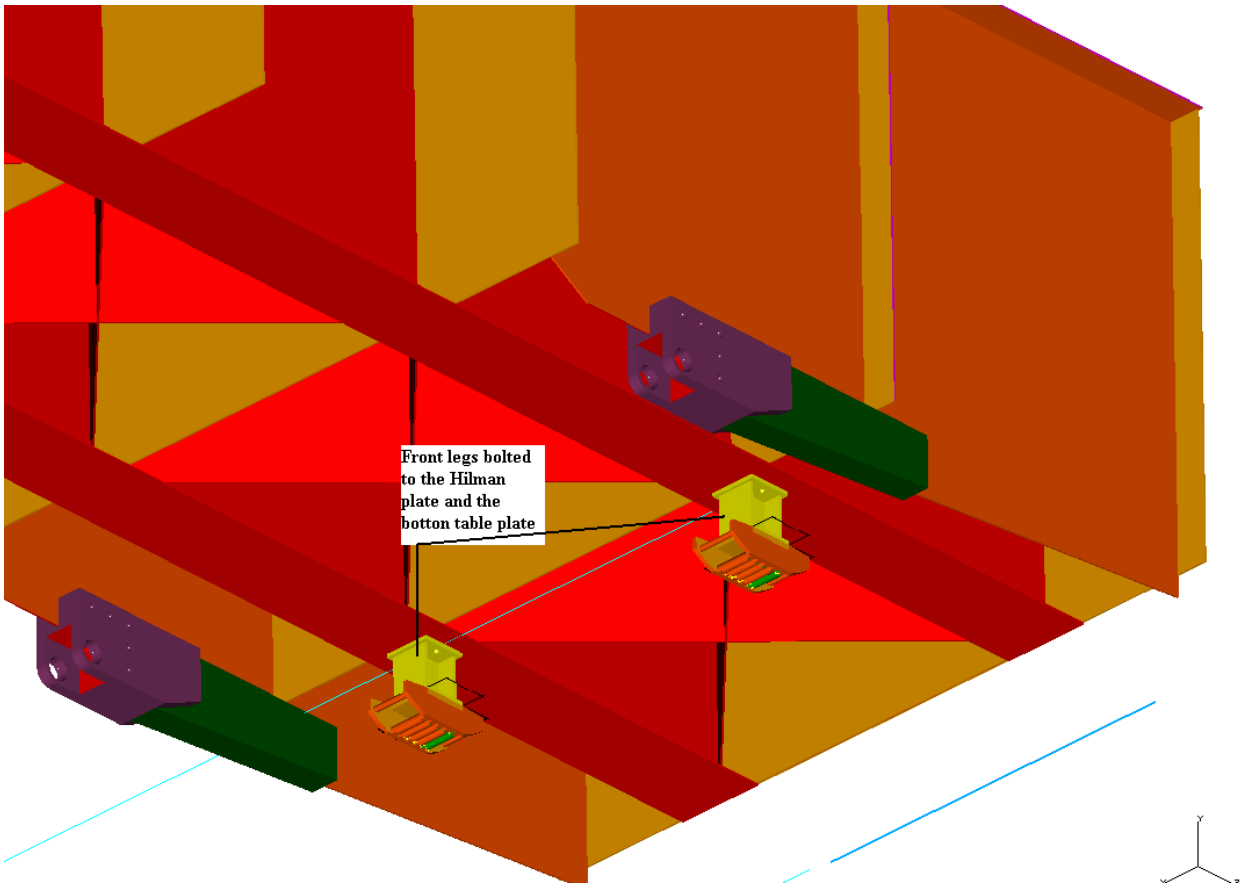

Figure 9: Bottom of the table shown with front legs and Hilmans, engineering drawings of the leg assembly are located in the appendix. Total height of the leg is 7''.

*The top and bottom plates will be the same size as the Hilman plate; 6-1/4'' x 6''; and ½'' thick

*A W5x19 beam is the largest that will fit this size plate.

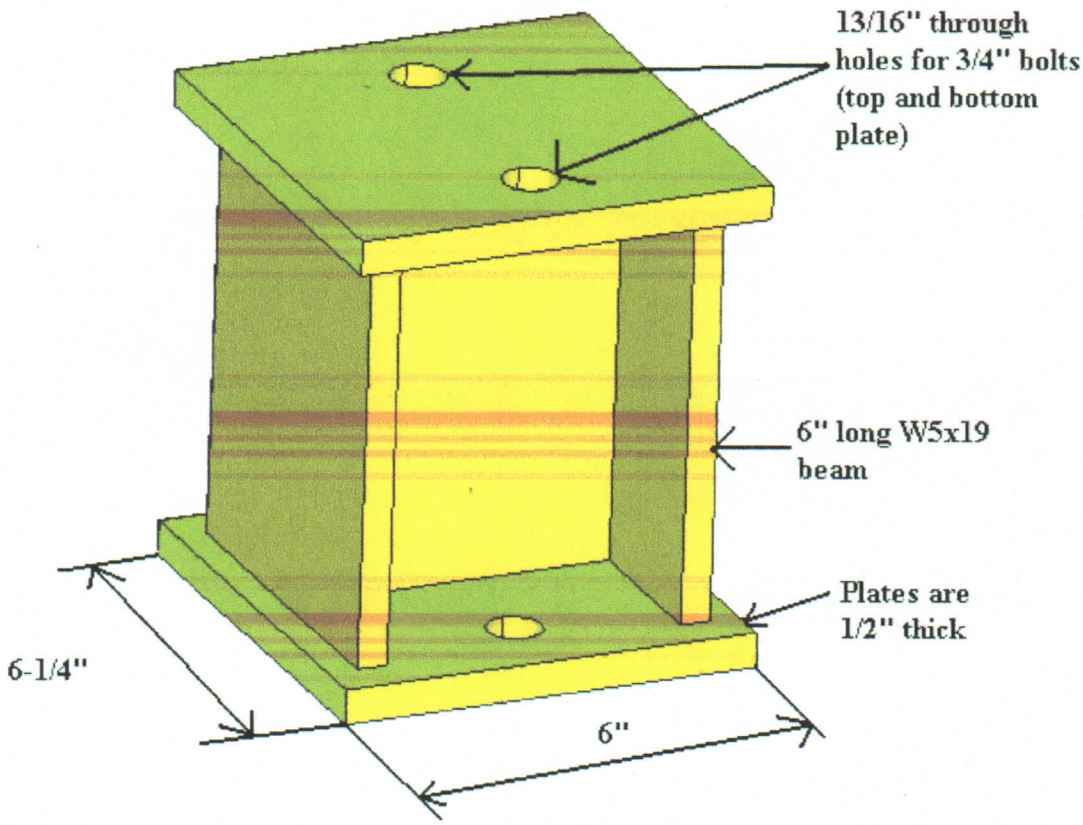

Figure 10: Front leg assembly. Bottom and top 6-1/4'' x 6'' by ½'' thick plates have 13/16'' through holes for connection to the Hilman and the table respectively. Engineering drawing located in the Appendix.

*Section properties, width/thickness ratios, and all equations from AISC Manual of Steel Construction-Allowable Stress Design 9th edition

→<u>W5x19 beam section properties</u>

-A = 5.54 in^2

-$I_{xx} = 26.2\ in^4$

-$I_{yy} = 9.13\ in^4$

-$r_x = 2.17\ in$

-$r_y = 1.28\ in$

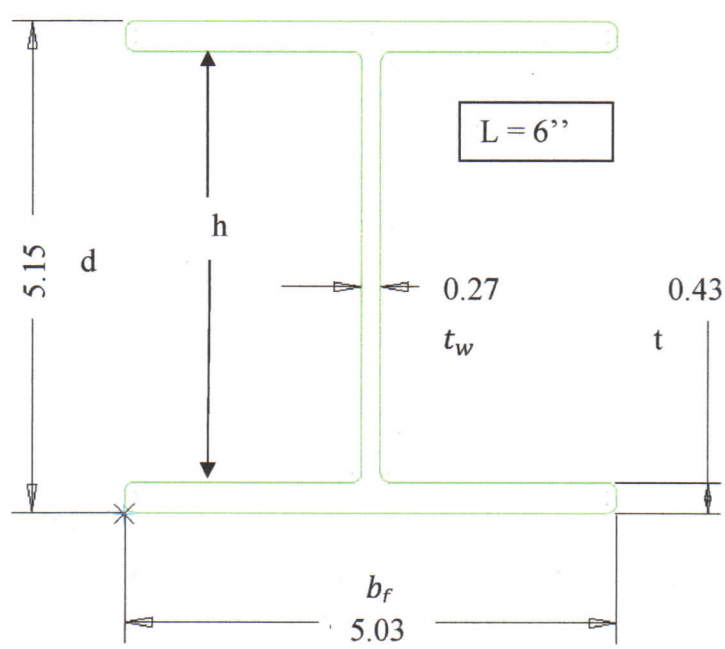

→<u>Limiting width/thickness ratios</u> (Table B5.1)

*The flange is an unstiffened element supported along one edge parallel to the compressive force; i.e. sec. B5.1 calls for $\mathbf{b} = \frac{1}{2}\boldsymbol{b_f} = 2.515$. The web is a stiffened element supported along two edges parallel to the compressive force and all distances will be taken at their full nominal length.

-Flanges of I shaped rolled beams in flexure: $b_f/t \leq 65/\sqrt{F_y}$ (compact)

$(2.515'')/(0.43'') = 5.8 \leq ? \; 65/\sqrt{36ksi} = 10.8$ → *flange is compact*

-Uniformly compressed stiffened elements supported on two sides (web)

$h/t_w \leq 253/\sqrt{F_y}$ (noncompact)

$(5.15''-2*0.43'')/(0.27'') = 19.1 \leq ? \; 253/\sqrt{36} = 42.2$ ok

-Webs in combined flexural and axial compression:

for $f_a/F_y \longrightarrow \left(\frac{22\ kips}{5.54\ in^2} / 36\ ksi = 0.11 \right) \leq ?\ 0.15$ (true) →

$d/t_w \leq 640/\sqrt{F_y}(1 - 3.74\, f_a/F_y)$ (compact)

$(5.15'')/(0.27'') = 19.1 \leq ? \; 640/\sqrt{36ksi}(1 - 3.71(0.11)) = 42.2$ *web is compact*

→ <u>Compressive Stress</u>

*Slenderness ratio Kl/r should not exceed 200 for compression members (sec. B7); where K will be taken at unity, r is the smallest radius of gyration, and l is the greatest unbraced distance (6''), therefore:

Kl/r = 6''/1.28'' = 4.67

$$C_c = \sqrt{2\pi^2 E/F_y} = \sqrt{2\pi^2(30 * 10^3)/36} = 128.25$$

*With Kl/r < C_C , Allowable compressive stress is (sec. E2):

$$F_a = \frac{[1-\frac{\left(\frac{Kl}{r}\right)^2}{2C_C}]F_y}{\frac{5}{3}+\frac{3(Kl/r)}{8C_C}-\frac{(\frac{Kl}{r})^3}{8(C_C)^3}}$$

$$F_a = \frac{[1-\frac{(4.67)^2}{2(128.25)}]36}{\frac{5}{3}+\frac{3(4.67)}{8(128.25)}-\frac{(4.67)^3}{8(128.25)^3}} = 21.4 \text{ ksi} = F_a$$

*The actual stress f_a = $R2_{vert}$/A = 22kips / 5.54 = **3.97 ksi = f_a**

* The actual compressive stress is well under the allowable limit.

→<u>Bending Stress</u>

*For strong axis bending of I shaped members with the greatest unbraced length $L_b < L_c$, the allowable bending stress is $F_b = 0.66F_y$

$$L_b = 6'' <? \ {}^{76b_f}/_{\sqrt{F_y}} \text{ and } {}^{20,000}/_{[({}^{d}/_{A_{flange}})]F_y}$$

$$(76*5.03)/(\sqrt{36}) = 63.7; \quad {}^{20,000}/_{[({}^{5.15}/_{(5.03*0.43)})36]} = 233.3$$

*With L_b (6″) < both L_c 's, the allowable bending stress is $F_b = 0.66F_y$

$F_b = 0.66F_y$ = 0.66*36 ksi = **23.76 ksi = F_b**

*Actual bending stress $f_b = \frac{Mc}{I_x}$;

M = L*$R2_{horz}$ = 6''*1,100# = 6,600 #*in

C = 5.15''/2 = 2.575''; $I_x = 26.2in^4$

$$f_b = \frac{6,600\#in*2.575''}{26.2in^4} = \mathbf{0.647\ ksi = f_b}$$

*Actual bending stress is well below the allowable limit

→Combined Stresses

*When $\frac{f_a}{F_a} \leq 0.15$; the following equation can be used:

$$\frac{f_a}{F_a} + \frac{f_{bx}}{F_{bx}} + \frac{f_{by}}{F_{by}} \leq 1$$

$$\frac{f_a}{F_a} = \frac{3.97\ ksi}{21.4\ ksi} = 0.186 \leq 0.15 \qquad \text{(not applicable)}$$

*Since the above equation is not applicable, the two following limits must be satisfied

$$1.)\ \frac{f_a}{F_a} + \frac{C_{mx} f_{bx}}{(1-\frac{f_a}{F'_{ex}})F_{bx}} + \cancel{\frac{C_{my} f_{by}}{(1-\frac{f_a}{F'_{ey}})F_{by}}} \leq 1.0$$

- Where C_{mx} *and* C_{my} are 0.85

- and $F'_e = \frac{12\pi^2 E}{23(\frac{Kl_b}{r_b})^2} = \frac{12\pi^2(30x10^3)}{23(\frac{6}{2.17})^2} = 20{,}207$ ksi

$$2.)\ \frac{f_a}{0.60F_y} + \frac{f_{bx}}{F_{bx}} + \cancel{\frac{f_{by}}{F_{by}}} \leq 1.0$$

*solutions

$$1.)\ 0.186 + \frac{0.85*0.647ksi}{\left(1-\frac{3.97\ ksi}{20{,}207\ ksi}\right)23.76\ ksi} \quad (= 0.213) \leq ?\ 1.0 \quad \text{(ok)}$$

$$2.)\ \frac{3.97\ ksi}{0.60(36\ ksi)} + \frac{0.647\ ksi}{23.76\ ksi} \quad (= .21) \leq ?\ 1.0 \qquad \text{(ok)}$$

*both sets of combined stressed are well under the allowable limit

→Shear on bolts

Shear on bolts will be considered the same as the base plate bolts on the back legs, requiring 2-3/4'' bolts. Again the Hilman will be threaded to a ¾'' tap as shown in Figure 7, and the top plate will be bolted to the bottom table plate.

→Minimum Weld length

With the thickest part being welded at ½'', the **minimum nominal fillet weld size according to table J2.4, is ¼''**. The minimum nominal tensile strength will be assumed at a minimum of 60 ksi. Minimum weld length will be reverse calculated based on the maximum allowable shear stress.

*Maximum allowable shear stress on a fillet weld is 0.30 x nominal tensile strength

$$-F_{v,weld} = 0.30\ x\ 60ksi = \mathbf{18\ ksi} = \boldsymbol{F_{v,weld}}$$

*Minimum weld length

$$-f_{v,weld} = 18\ \text{ksi} = \frac{R2_{horz}}{A_{eff}}\ ;\ \text{where}\ A_{eff} = d_{weld} l_{min,weld} = (1/4'' * l_{min,weld})$$

$$-f_{v,weld} = 18\ \text{ksi} = \frac{1{,}100\#}{\frac{1}{4}'' * l_{min,weld}} \rightarrow l_{min,weld} = 0.24''$$

*The minimum weld length is relatively small; **both flanges will be welded to the ½'' plates.**

Summary and Conclusions

The existing back legs have proven to be sufficient in compression and bending, but **a 4x3x1/2'' angle should be added across them prevent any torsional loading**. The top 12.5° connection plate and bolts have proven sufficient without modification, however to bottom base plate will need two additional holes drilled in order to connect to the Hilman (see figure 8). The Hilman itself will need two corresponding drilled and ¾'' tapped holes put into the top plate (see figure 7). The newly designed front legs will need to be fabricated along with corresponding holes drilled on the bottom plate of the table (see Appendix for dimensions).

Appendix

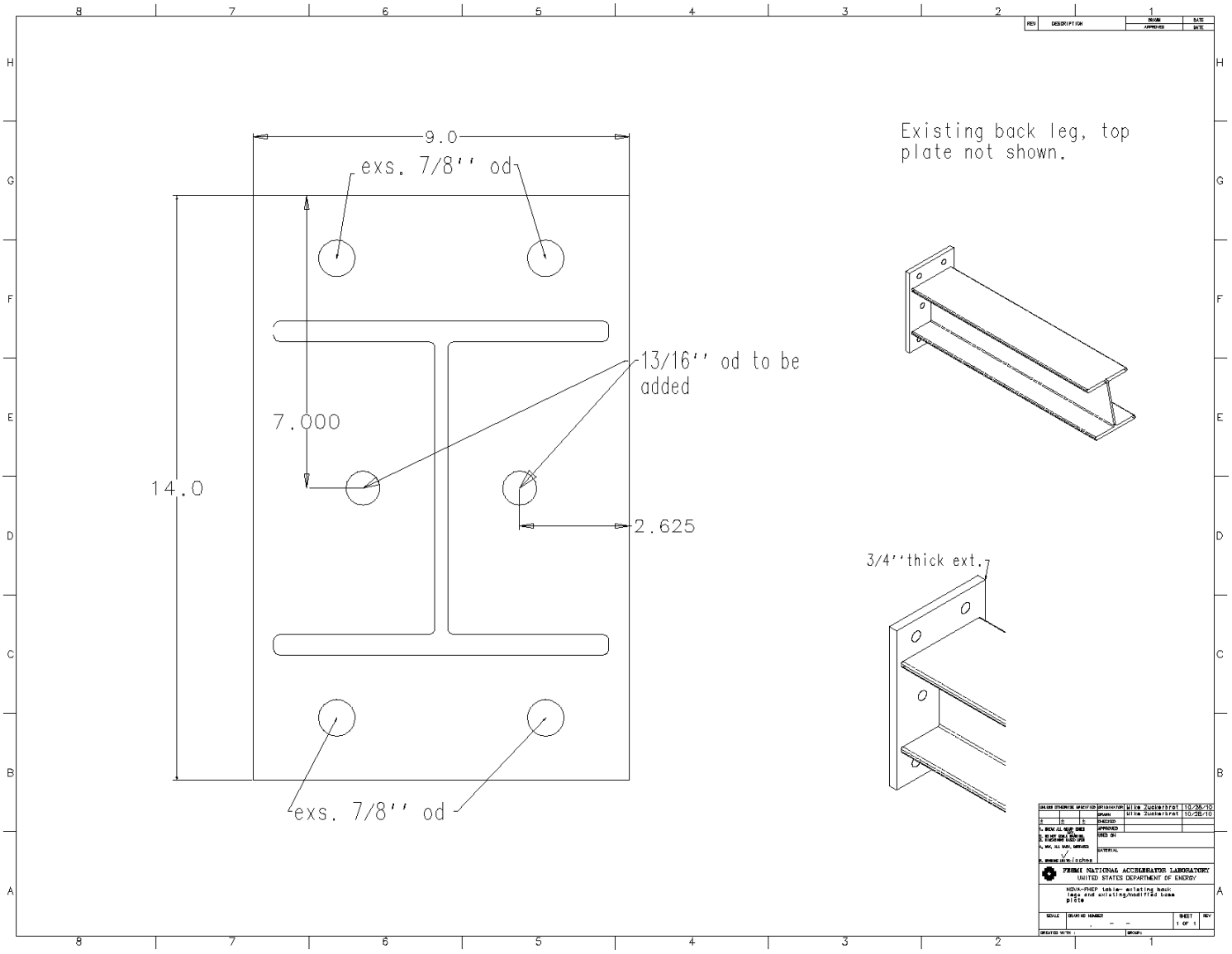

Existing back leg with base plate detail (top plate not shown), 2 new 13/16'' od holes need to be added.

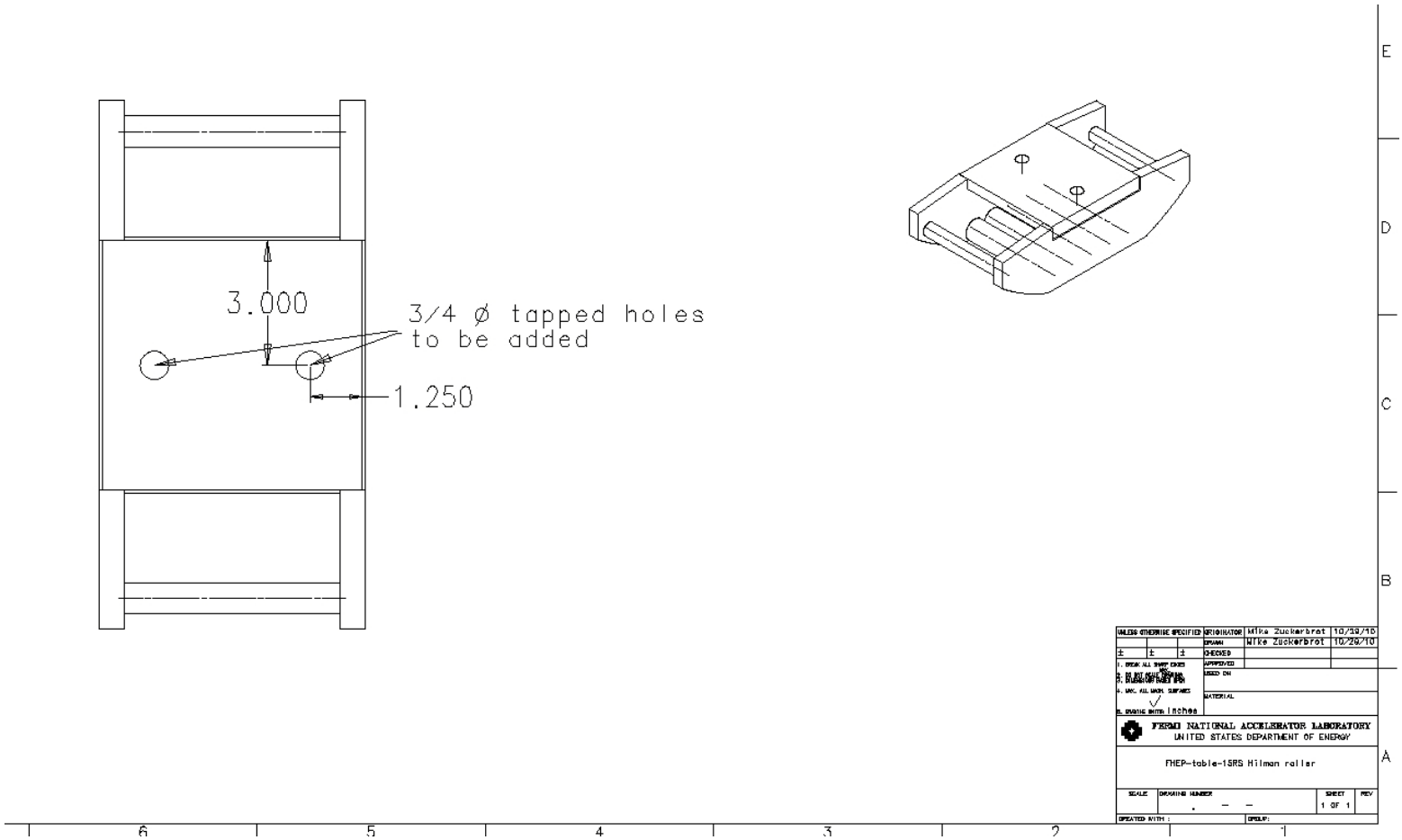

15 ton capacity Hilman roller shown with ¾’’ threaded holes to be tapped on the top 6 ¼’’ x 6’’ (app. 0.6’’ thick) steel plate.

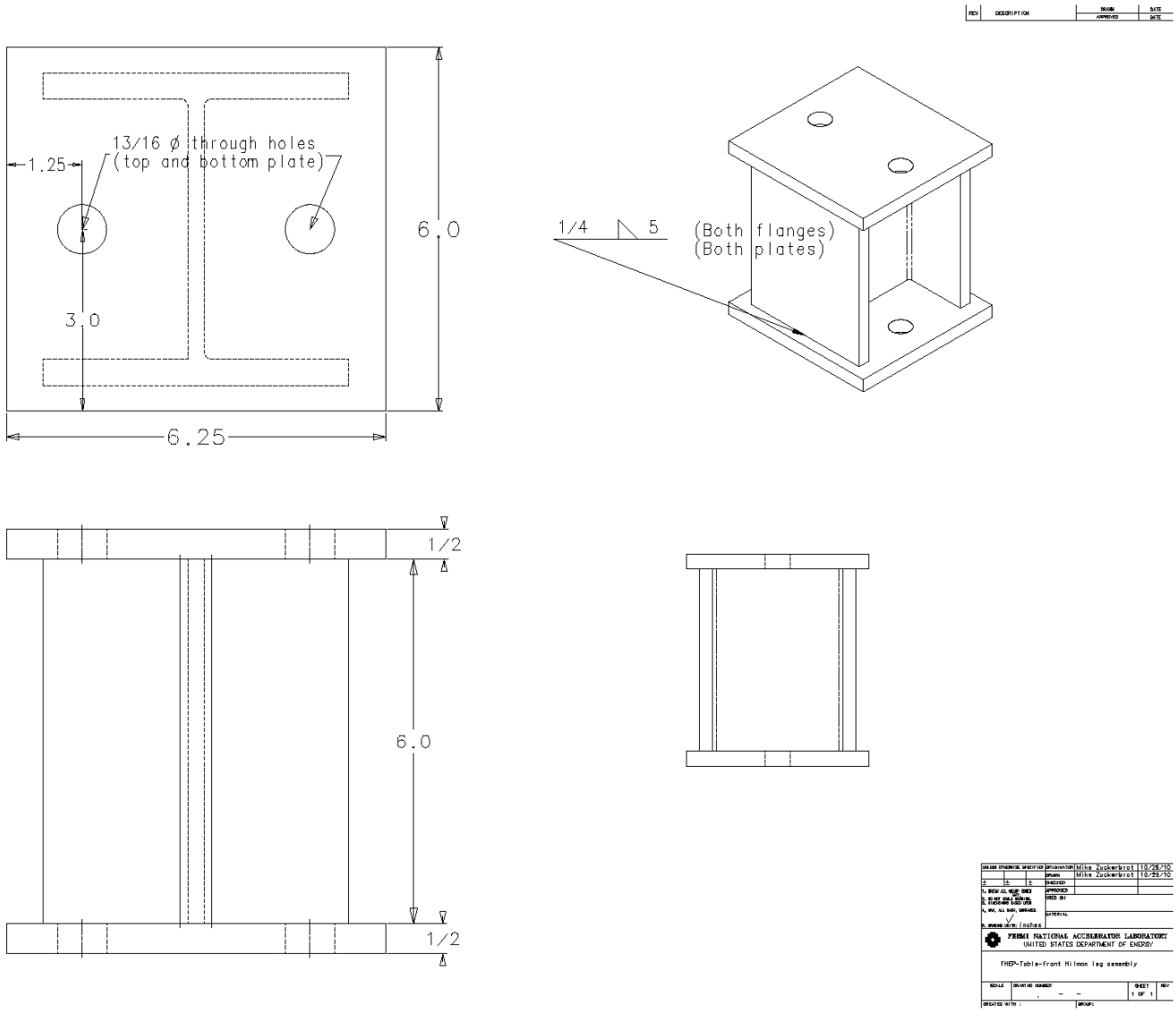

Front leg assembly and dimensional details shown

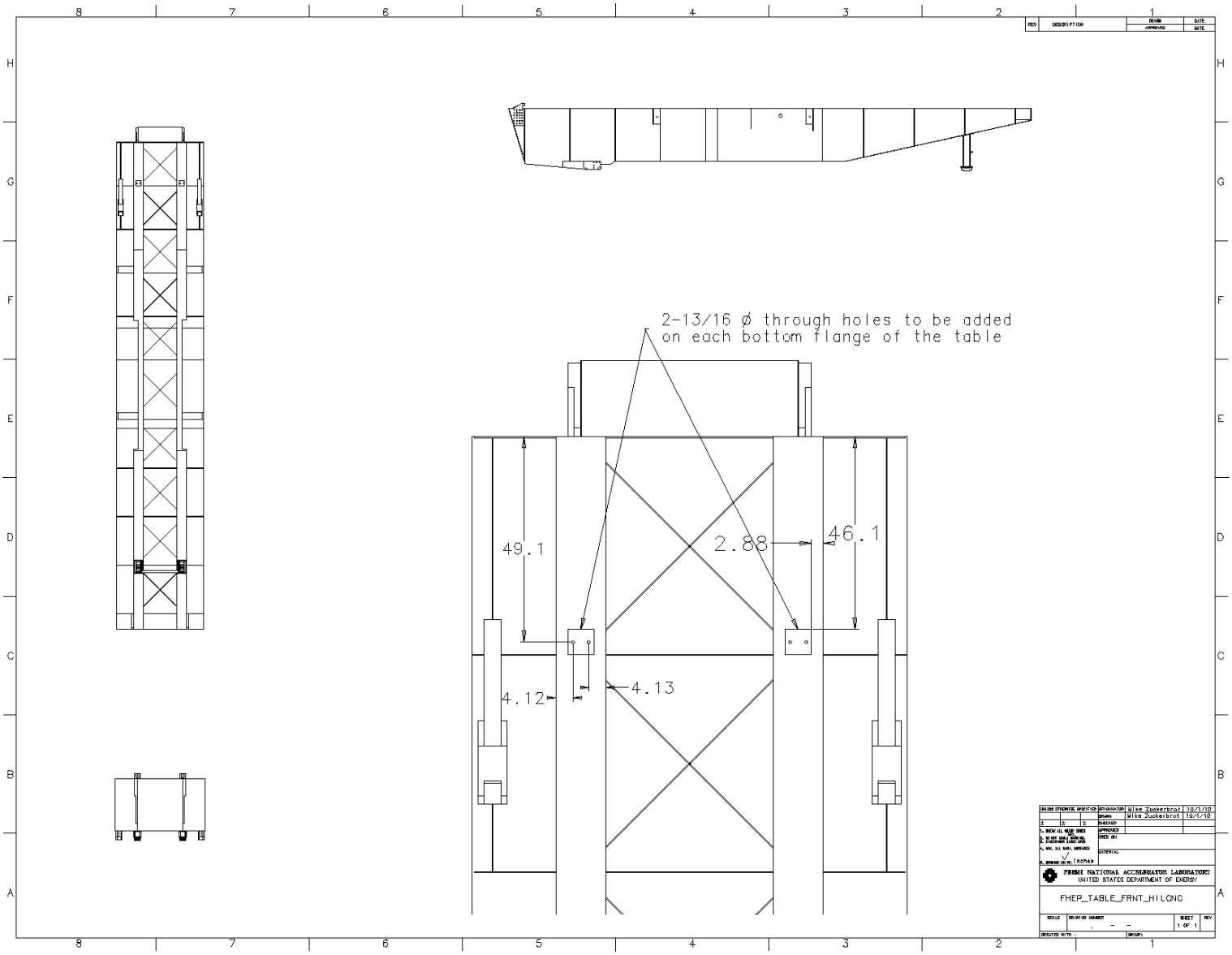

Bottom of the FHEP table shown, with detail for location of the front Hilman leg connections