Fermilab

Particle Physics Division
Mechanical Department Engineering Note

Number: MD-ENG- 246 Date: May 12, 2010

Project Internal Reference:

Project: DECam

Title: The Brief Structural Analysis & Calculations for the DECam Simulator Rotator Frames (Inner & Outer Race Frames)

Author(s): Edward Chi

Reviewer(s):

Key Words: Simulator, Rotator, Outer & Inner Race frame, Applying load, Allowable & computed Stresses, FEA, Reaction, Deflection, Moment, Bolt.

Abstract Summary:

The mechanical structural behavior of the DECam Simulator Rotator with 48,000 lbs total load were extensively discussed, analyzed and studied under several loading cases. Both the manual mathematical computation and FEA method are applied respectively for the calculations, the results from both approaches are consistent with each other and meet the subjected applicable codes. Some critical parts, structural fasteners and welds were also presented for discussion and study.

Applicable Codes:

"Allowable Stress Design", AISC, 9th edition
"Fastener Standards" 6th edition, by Industrial Fasteners Institute", 1988
"Steel Structures" by C. Salmon & J. Johnson, 3rd edition, 1990
"Structural Welding Code-Steel", ANSI/AWS D1.1, 1990

A Brief Structural Analysis and Calculations for DECam Simulator Rotator Frames (Inner Race & Outer Race)

1. Background Brief Introduction:

As part of the DECam project, a telescope simulator will be built, assembled, installed and tested in Fermilab. The Rotator is composed of the Inner Race frame, Outer Race frame, and the transmission system. Because of the access dimensional restriction of Lab A (where the Simulator is located), each race frame is assembled into three (3) 120 degree sectional frames. The Rotator will support the Simulator telescope and will also simulate the telescope movements in two axes (Optical-z & Zenith-x axes). The Rotator Inner Race and the Telescope together (38,000 lbs) will rotate +/- 165 degrees about the Outer Race (optical axis) @ max. speed of 0.085 rpm. The Outer Race, Inner Race and the Telescope together (48,000 lbs) will rotate about Zenith-x axis of figure 1.1 from 0 to 90 degrees (also 90 to 0 degrees) at the maximum speed of 0.05 rpm. The detail information, configuration and others of the DECam Simulator can find from the link: http://desdocdb.fnal.gov:8080/cgibin/RetrieveFile?docid=1528&version=3&filename=rotator1-simulator-des-022708.ppt.

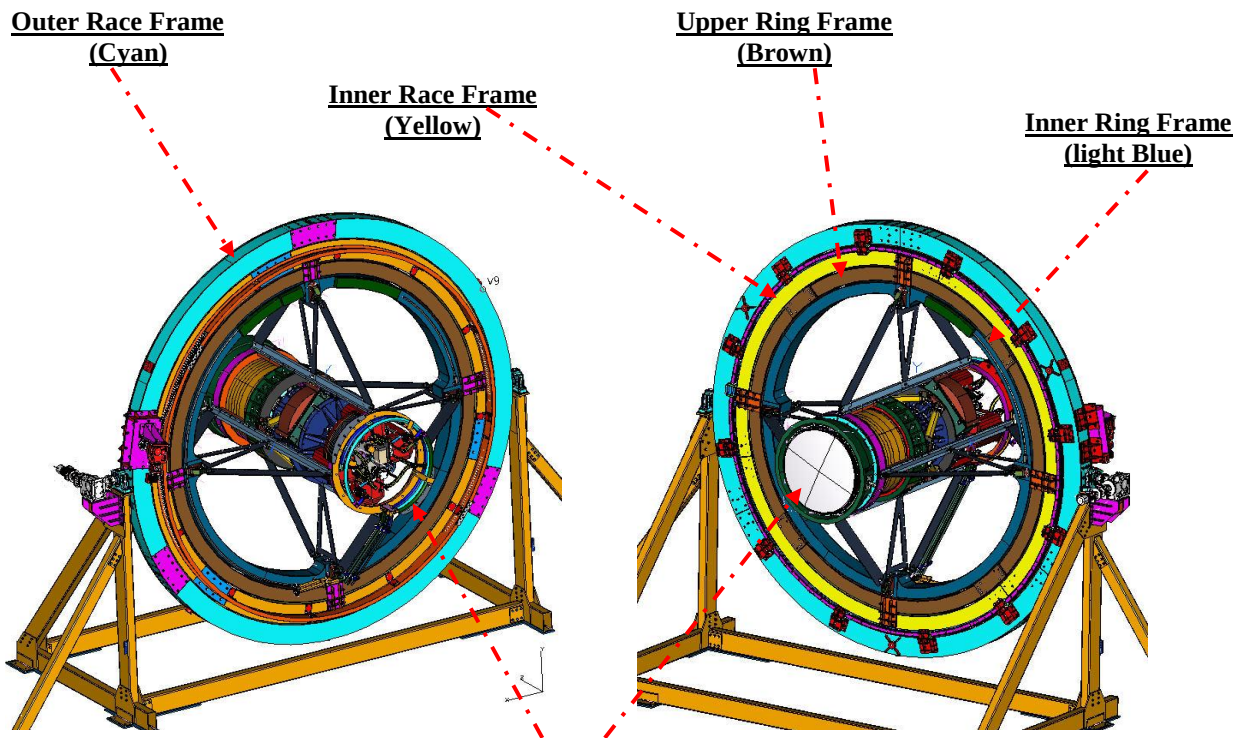

(1) (2)

Figure 1.1, Main components of telescope simulator at Lab A. and the Simulator at vertical position (90 degree)

2. Design Criteria, Material Properties and the Allowable Stresses

W_{tele} = 28,000 lbs (total mass weight of the telescope: Inner and Upper rings, Cage, fins

$W_{rotator}$ = 20,000 lbs (mass weight of the Inner race, Outer race and the others)
See dwg: ME-436983, MD-480099, ME-480107 and their related drawings.
W_{t1} = 48,000 lbs (total weight of the Inner ring, Upper ring and the Rotator).
where:
W_{dl} = 10,000 lbs (mass weight of the outer race), dead load.
W_{ll} = 38,000 lbs (combined wt. of telescope cage, the inner ring, upper ring and the inner race), live load
Nominal dim. of the inner race: 215" (d_i) x 239" (d_o) x 12.0"
Nominal dim. of the outer race: 241" (d_i) x 265" (d_o) x 12.0"

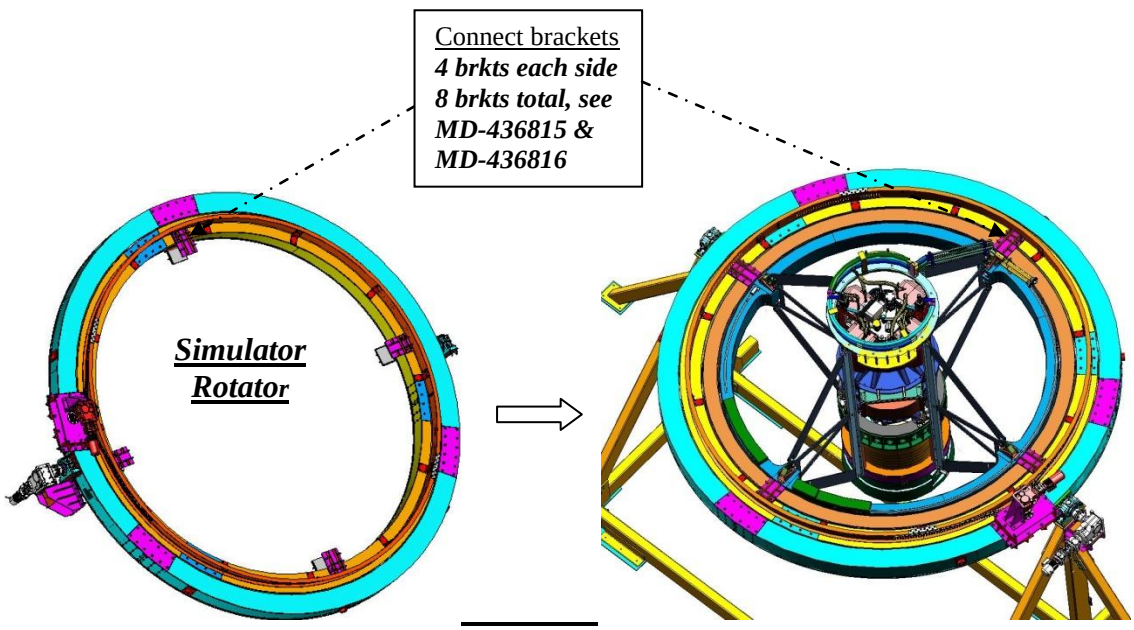

Figure 1.2, The Rotator and the Simulator, and the simulator at the horizontal position (0 degree)

Materials of the Outer race and Inner race (See drawings ME-436905, ME-436945 and ME-436947):

ASTM A36
F_u = 58 ksi,
F_y = 36 ksi
F_{b1} = 0.6 F_y = 21.6 ksi (Allowable bending stress per "ASM"
F_{v1} = 0.4 Fy = 14.4 ksi (Allowable shear stress per "ASM")

ASTM A572, Gd. 50
F_u = 65 ksi,
F_y = 50 ksi
F_{b1} = 0.6 F_y = 30.0 ksi (Allowable bending stress per "ASM")
F_{v1} = 0.4 Fy = 20.0 ksi (Allowable shear stress per "ASM")

Welding metal: E70xx
F_u = 70.0 ksi,
F_y = 60.0 ksi (per ANSI/AWS D1.1)
F_{t1} = F_{v1} = 21.0 ksi (per Table J2.5, ASD, 9th edition)

Fasteners:
Grdae 5, Hex head,
F_u = 120 ksi,
F_t = 0.33 F_u = 39.6 ksi (Allowable tensile stress, per sect 4-3, ASD)
F_v = 0.17F_u = 20.4 ksi (Allowable shear stress per sect 4-5, ASD)

Grade 8, ASTM A574,
F_u = 170 ksi,
F_t = 0.33 F_u = 56.1 ksi (Allowable tensile stress, per sect 4-3, ASD)
F_v = 0.17F_u = 28.9 ksi (Allowable shear stress per sect 4-5, ASD)

3. <u>Define the boundary condition (BC), set up the loading case to simulate the task of the Telescope Simulator Rotator</u>

As the introduction from section 1, and also the picture shown from 3d model of figures 1.1 and 1.2, we find out that the designated Simulator is supported by the Outer race frame through two supporters (two pillow bearing blocks). It is found out the Outer race frame will have the larger geometrical inertia when simulator at vertical position (See figure 1.1), however, the outer race frame will be in critical condition when the Simulator at the horizontal position (See figure 1.2) because of the smaller geometrical properties subject the loading condition.

We will have a structural analysis and calculation both in manual mathematical calculation and finite element analysis (FEA).
We will have critical parts and fastener analysis and calculations in several different approaches per applicable codes.
We will also have welds calculations in the critical weldment area.

3.1 *First, let's calculate it in manual mathematical method:*

When the Outer race frame is at the position as showing from figure 1.2 of page 3, let's assume the loading case as: the uniformly distributed loading force beam with two equal overhanging supports as it is showing from figure 3.1 of page 5. where two (2) supports

represented by location R_1 & R_2, the two equal overhanging ends joint together to represent a closed circle beam.
(See case 19, Part VII, "Aluminum Design Manual").

where:

$W = W_{t1} = 48{,}000$ lbs

$L = \pi D_m = \pi (d_o + d_i)/2 = 794.82$"

$w = W/L = 60.391$ lbs/inch

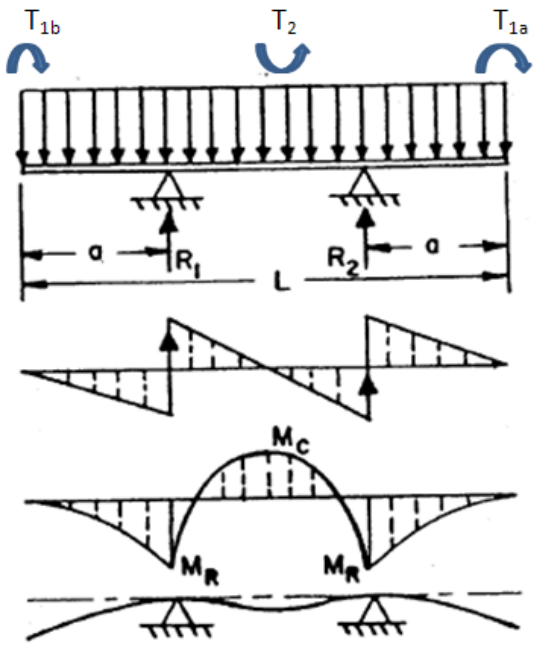

Uniformly distributed loading of w lb/in

Total load, $W = wL$

Reactions: $R_1 = R_2 = \frac{W}{2}$

Shear forces:

$V = wa$, just outboard of supports

$V = \frac{w}{2}(L - 2a)$, just inboard of supports

Bending moments:

$M_R = -\frac{wa^2}{2} = -\frac{Wa^2}{2L}$, at supports

$M_c = \frac{W}{8}(L - 4a)$, at center

$$\text{def.} = \frac{W\,(L-2a)^3}{384\,EI}\left[\frac{5}{L}(L - 2a) - \frac{24}{L}\left(\frac{a^2}{L - 2a}\right)\right], \text{ at center}$$

$$\text{def.} = \frac{W\,(L - 2a)^2 a}{24\,EIL}\left[-1 + 6\left(\frac{a}{L - 2a}\right)^2 + 3\left(\frac{a}{L - 2a}\right)^3\right], \text{ at ends}$$

Torsional Moments:

$T_2 = -(T_{1a} + T_{1b}) = \sum P_i e_i$

Figure 3.1.1 Uniformly distributed load beam with two equal overhanging supports and the torsional moments from the off center loads.

$a = L/4 = 198.71$"

$M_{max} = -\,wa^2/2 = -\,[(60.391 \text{ lbs. in}^{-1}) \times (198.71)^2 \text{ in}^2] \div 2$

$= -1{,}192{,}289$ lbs -in (maximum bending moment at the support location)

$V_{max} = W/2 = 24{,}000$ lbs.

$M_c = (W/8)(L-4a) = 0$ for the moment at center since $L-4a = 0$ for the defined B. C.

Since the max. moment and the max. shear force both locate in the support location, let's get the geometrical property of the support area of the Outer race frame:

The detail construction of the Outer race frame in the both two support location can be found from top view, section C-C and detail F of drawing ME-436905. For the sake of simple and conservative approach, the geometrical property from Figure 3.2 (2) has omitted the 0.75" x 9.25" x 13.50" plate and the other reinforcing gussets as shown from figure 3.2 (1) of page 6.

The geometrical property of the Outer race frame is:

$I_{xx1} = [b\,(d^3 - d_1^3)] \div 12$ (See page 6-19, ASD, 9th edition)
$= 12 \times (12^3 - 10.50^3) \div 12\ in^4$
$= 570.375\ in^4$
$A_1 = (0.75 \times 12.00 \times 2)\ in^2 = 18\ in^2$

$I_{xx2} = (0.5 \times 10.50^3 \times 2) \div 12\ \ in^4$
$= 96.47\ in^4$
$A_2 = (0.50 \times 10.50 \times 2)\ in^2 = 10.50\ in^2$

Where : $b = 12$ in
$d = 12$ in
$d_1 = 10.50$ in
$C_{yy} = 6$ in

$I_{xx} = I_{xx1} + I_{xx2} = (570.375 + 96.47)\ in^4$
$= 666.845\ in^4$
$S_{xx} = I_{xx} \div C = 111.14\ in^3$

$A = A_1 + A_2 = 28.50\ in^2$

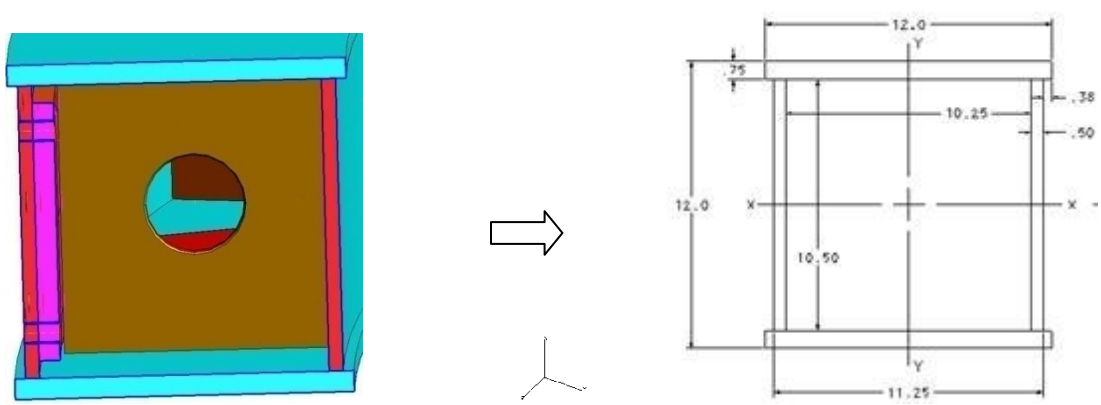

(1) (2)

Figure 3.1.2, <u>The cross-sect view of the Outer race frame cut through the supt. location</u>

The radius of the gyration about the x axis:
r_{xx} = 4.837 in

Similar approach can find that:

I_{yy1}= 10.50 x ($11.25^3 - 10.25^3$) ÷ 12 in^4
= 303.57 in^4
I_{yy2} = (0.75 x 12^3 x 2) ÷ 12 in^4
= 216 in^4

$I_{yy} = I_{yy1} + I_{yy2}$ = 519.57 in^4

S_{yy} = 92.37 in^3
where C_{xx} = 5.625 in

The radius of the gyration about the y axis:
r_{yy} = 4.27 in

The polar moment of inertia about the z axis:
J_{zz} = 1,186.415 in^4

The radius of the gyration about the z axis:
r_{zz} = 6.452 in

To find the maximum working computed stresses subject the defined boundary condition:

$f_b = M_{max} \div S_{xx}$ = 1,192,289 lbs -in ÷ 111.14 in^3
= <u>10.728 ksi</u> < F_b= 21.60 ksi

$f_{v1} = V_{max} \div A$ = 24,000 lbs ÷ 28.50 in^2
= <u>0.85 ksi</u> < F_v= 14.40 ksi

The computed working stresses are satisfactory subject to the applying load.

To find the maximum deflection under the boundary condition as we defined:

δ_{max} = (W $(L-2a)^3$ ÷ 384 E I_{xx}) x [5/L(L-2a) – (24/L)(a^2 ÷(L-2a))]
= (48,000 lbs x 397.41^3 in^3 ÷ 384 x 30 x 10^6 lbs-in^{-2} x 666.845 in^4) x
[(5/794.82 in) x 397.41 in – (24/794.82 in) x (198.71^2 in^2 ÷397.41 in)]
= 0.3922 in x (2.5 – 3.00015)
= 0.3922 in x (-0.50015)
= <u>- 0.1962 in</u> @ the center between the supports

where: E = 30 x 10^6 psi, modulus of elasticity of the carbon steel.
G = 12 x 10^6 psi, modulus of elasticity in shear of the steel.

Since it is the circle closed beam, the equation for beam ends deflection from figure 3.1 of page 5 is not applicable in this loading case.

The shear stress subject to the Torsional moments generates from the circular closed beam:

We assume that there is torsional moment applying to the beam support location since it is a circular beam with off center distance in the 3rd axis (z axis, perpendicular to the x and y axes). So it is necessary to study the mechanical behavior of the Rotator under the torsional moment with eccentric distance in z direction:

We <u>conservatively assumed</u> that all eccentric forces transferred to the Outer race frame, and all the torsional moments will resist by the Outer race frame only.

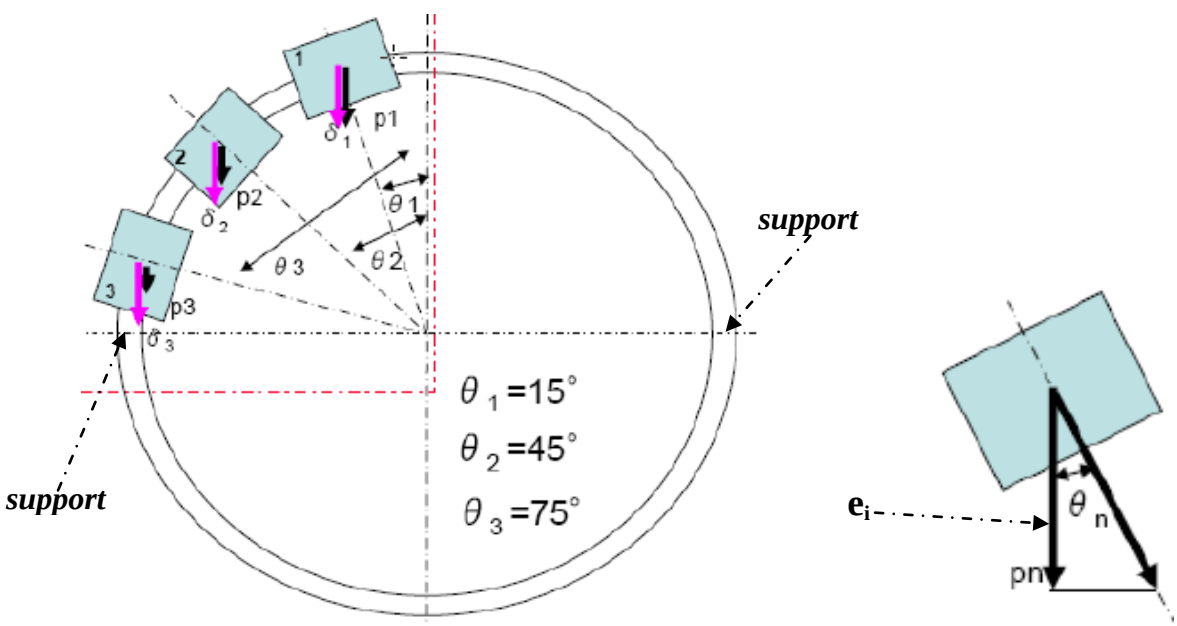

Figure 3.1.3, <u>The diagram of the bearing brackets of the Outer race frame (only showing quarter section).</u>

We assume that the maximum off center distance:

e_{max} = [(265" + 241") ÷ 2] ÷ 2 = 126.50 in (See page 3)

Per page 2, it is found out that the dead weight of the Outer race is: W_{dl} = 10,000 lbs
This mass weight is uniformly distributed over the Outer race frame with the length of

$L = \pi D_m = \pi (d_o + d_i)/2 = 794.82"$

The uniform weight $w = W_{dl}/L$ = 12.5815 lbs/in, the eccentric uniform load w (to xy plane) will uniformly distributed from e_{max} = 126.50" to e =0 (@ the support location) as

showing from figure 3.1.3. The torsional moment at the support will be:

$T_1 = w\,(e_{max})^2 \div 2 = \underline{100{,}664 \text{ lbs-in}}$

The dead mass weight of the Inner race frame will transferred to the Outer race frame through 12 THK bearing blocks, each quarter section has 3 bearing blocks as it displayed from figure 3.1.3 of page 8.

$T_2 = P_2 \sum e_i$

Where: P_2 = 10,000 lbs ÷ 12 = 834 lbs.

The weight of the Inner race frame distributes to each THK bearing block.

e_i: The distance between the xy plane and the bearing block in z axis.

Where:

$e_1 = r_m\,(=e_{max})\,COS15^o$ = 126.50" x 0.9659 = 122.1864"

$e_2 = r_m\,(=e_{max})\,COS45^o$ = 126.50" x 0.7071 = 89.4482"

$e_3 = r_m\,(=e_{max})\,COS75^o$ = 126.50" x 0.2588 = 32.7382"

$T_2 = P_2 \sum e_i$ = 834 lbs (122.1864 + 89.4482 + 32.7382) in

= $\underline{203{,}807 \text{ lbs-in}}$

$T_3 = P_3 \sum e_i$

where T_3 is the torsional moment at the support location generated from the mass weight of the telescope W_{tele} = 28,000 lbs (See page 3).

P_3 = 28000 lbs ÷ 12 = 2,334 lbs.

$T_3 = P_3 \sum e_i$ = 2,334 lbs (122.1864 + 89.4482 + 32.7382) in

= $\underline{570{,}366 \text{ lbs-in}}$

$T_t = T_1 + T_2 + T_3$

= (100,664 + 203,807 + 570,366) lbs-in

= $\underline{874{,}837 \text{ lbs-in}}$

$f_{v2} = (T_t\, r_{zz}) \div J_{zz}$ = (874,837 lbs-in x 6.452 in) ÷ 1,186.415 in^4

= 4.758 ksi

$f_v = f_{v1} + f_{v2}$ = (0.85 + 4.758) ksi = $\underline{5.608 \text{ ksi}}$ < F_v= 14.40 ksi

To find the angular deflection Θ of the Outer race frame subject the torsional moment T_t:

$\Theta = (T_t\, L_{eff}) \div GJ_{zz}$

= (847,837 lbs-in x 198.71 in) ÷ (12 x10^6 psi x 1,186.415 in^4)

= 0.01221 radian

where: G = 12 x 10^6 psi, modulus of elasticity in shear of the steel

L_{eff} = a = 198.71"

Summary of the manual mathematical approach:

M_{max} = 1,192,289 lbs -in (at the support location) (see page 5)
V_{max} = W/2 =24,000 lbs (see page 5)
T_t = 874,837 lbs-in (see page 9)
Θ = 0.0122 radian (see page 9)
$\boldsymbol{\delta}_{max}$ = 0.1962" @ the center between the supports (see page 7)
f_b = 10.728 ksi < F_b= 21.60 ksi (see page 7)
f_v = 5.608 ksi < F_v= 14.40 ksi (see page 9)

3.2 Analysis with the Finite Element Analysis (FEA) method:

The calculations were analyzed by several models:

First, built a model to simulate the loading case as showing from figure 1.2 of page 3, the Simulator rotator is supported by two places, all dead weight of the rotator (20,000 lbs) plus the external live load (28,000 lbs, the total weight of the telescope) applying to the rotator through four (4) connecting brackets as showing from figure 3.2.1.

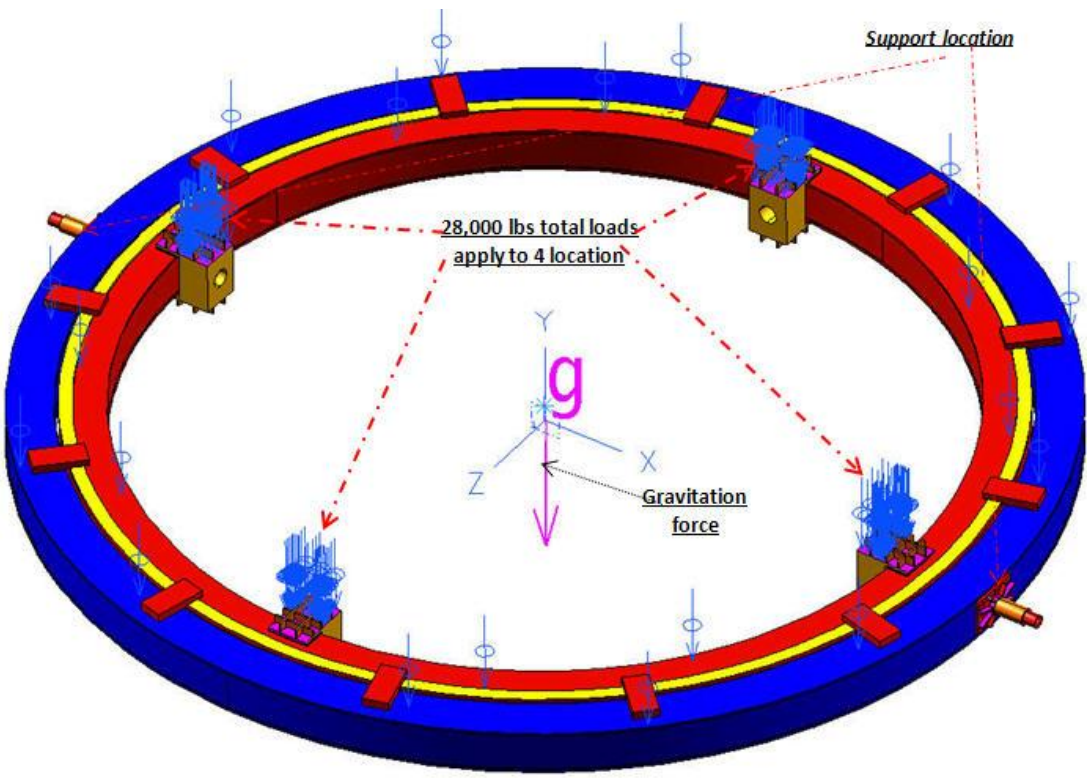

Figure 3.2.1, The Boundary Condition of the Rotator at the horizontal position

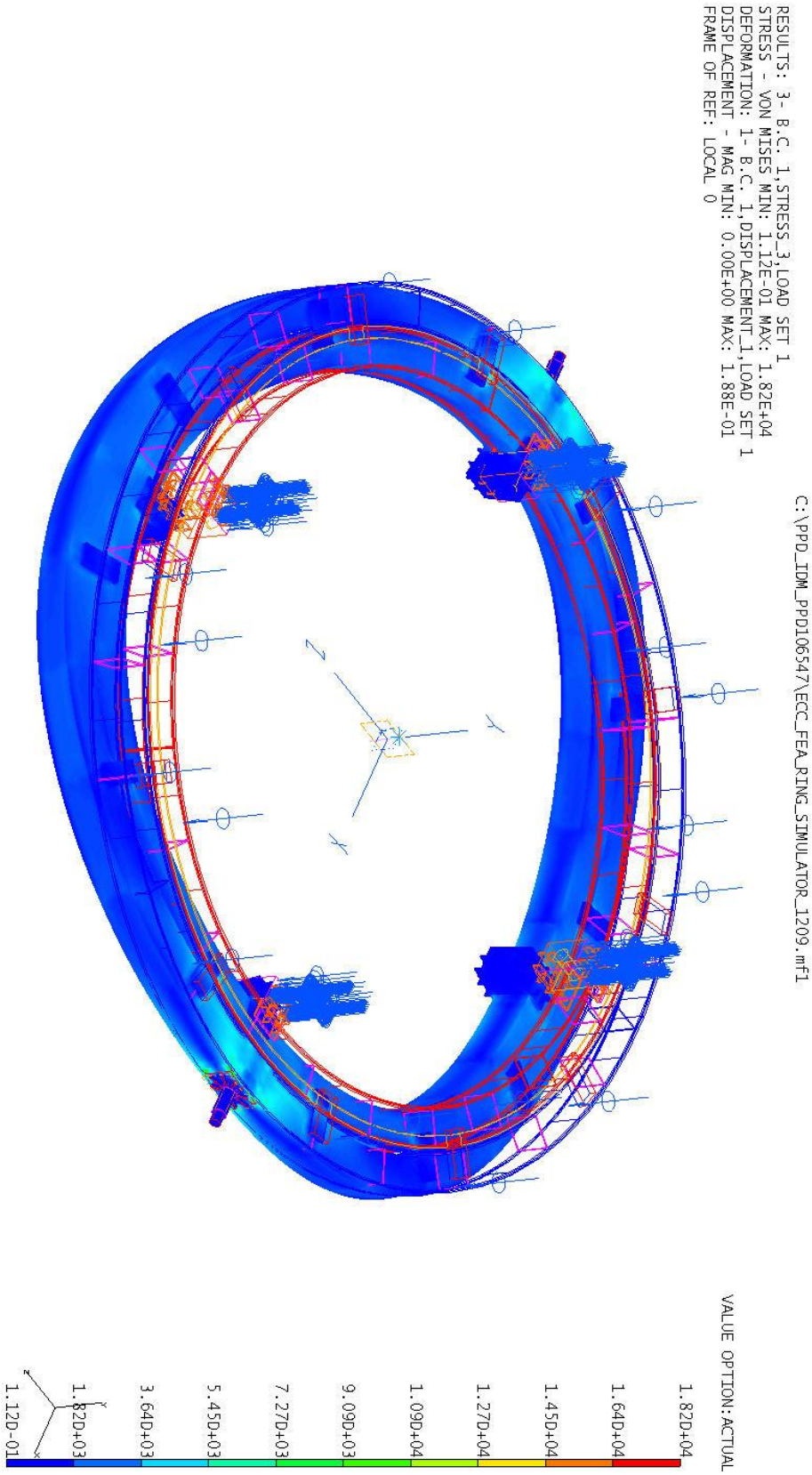

Figure 3.2.2, <u>The stress and deformation diagram of the Rotator under horizontal position.</u>

Per the boundary condition as we defined from page 4 and figure 3.2.1 of page 10, we found the FEA results of the stresses, deflection and reaction forces. Figure 3.2.2 of page 11 is the FEA graphic diagram which displays the stresses and deformation of the rotator under the defined boundary condition. We also can find the summary data results from figure 3.2.3, figure 3.2.4 and figure 3.2.5 of page 12 to page 13.

```
                                                                    Page 1

I-DEAS 12 NX Series m4:    Simulation                    15-Apr-10  14:07:21
C:\PPD_IDM_PPD106547\ECC_FEA_RING_SIMULATOR_1209.mf1

Group ID           : None
Result Set         : 3 -  B.C. 1,STRESS_3,LOAD SET 1
Report Type        : Element                     Units          : IN
Result Type        : STRESS
Frame of Reference: 1 - CS94                     Data Component: Y-Component
Data range         : Below Data Value            Lower Value    :  6.3310E+03


         Stress-XX  Stress-XY  Stress-YY  Stress-XZ  Stress-YZ  Stress-ZZ


              29476      70274      45569       5606      58390      55571
Maximum   1.200E+04  4.784E+03  1.271E+04  5.056E+03  7.360E+03  1.264E+04

              70954      33180      33180       1887      43037      43037
Minimum  -1.111E+04 -4.984E+03 -1.279E+04 -5.256E+03 -7.167E+03 -1.542E+04


Average  -2.125E+01 -2.489E-02 -3.332E+00 -8.560E-02  1.582E-01 -2.038E-02
```

Figure 3.2.3, <u>The stress data from the Rotator under the horizontal position</u>

Figure 3.2.3 displayed the calculated the maximum stress results under the boundary condition as we defined from page 11 and page 12. It finds out that the maximum bending stress in tensional direction f_{bt} = <u>12.71 ksi</u> < F_b= 21.60 ksi, maximum bending stress in compressive direction f_{bc} = <u>15.42 ksi</u> < F_b= 21.60 ksi, the maximum shear stress f_v = <u>7.36 ksi</u> < F_v= 14.40 ksi.

Figure 3.2.4 from page 13 is the calculated data sheet of the total reaction force of the model under the boundary condition as defined from page 10. It is found out that the total reaction force of the model is about 48,000 lbs which is equal the total force (dead load plus the live load) applying to the system (model).

Figure 3.2.5 from page 13 is the calculated data sheet of the displacement (deflection) value of the model under the boundary condition as defined from page 10. It is found

Page 1

I-DEAS 12 NX Series m4: Simulation 15-Apr-10 14:09:31
C:\PPD_IDM_PPD106547\ECC_FEA_RING_SIMULATOR_1209.mf1

Group ID : None
Result Set : 2 - B.C. 1,REACTION FORCE_2,LOAD SET 1
Report Type : Contour Units : IN
Result Type : REACTION FORCE
Frame of Reference: 1 - CS94 Data Component: Y-Component

	Reacti-X	Reacti-Y	Reacti-Z	Reacti-RX	Reacti-RY	Reacti-RZ
Total	-2.454E-02	4.806E+04	-7.324E-03	0.000E+00	0.000E+00	0.000E+00
	130970	3264	2910	4	4	4
Maximum	2.652E+03	1.642E+03	7.727E+03	0.000E+00	0.000E+00	0.000E+00
	131010	37939	2871	4	4	4
Minimum	-2.711E+03	-1.618E+03	-7.690E+03	0.000E+00	0.000E+00	0.000E+00
Average	-5.653E-05	1.107E+02	-1.688E-05	0.000E+00	0.000E+00	0.000E+00

Figure 3.2.4, The reaction force data from the Rotator under the horizontal position

Page 1

I-DEAS 12 NX Series m4: Simulation 15-Apr-10 14:10:25
C:\PPD_IDM_PPD106547\ECC_FEA_RING_SIMULATOR_1209.mf1

Group ID : None
Result Set : 1 - B.C. 1,DISPLACEMENT_1,LOAD SET 1
Report Type : Contour Units : IN
Result Type : DISPLACEMENT
Frame of Reference: 1 - CS94 Data Component: Y-Component

	Displa-X	Displa-Y	Displa-Z	Displa-RX	Displa-RY	Displa-RZ
	712	23725	7145	1	1	1
Maximum	1.149E-02	5.426E-04	1.943E-02	0.000E+00	0.000E+00	0.000E+00
	949	24738	7550	1	1	1
Minimum	-1.140E-02	-1.877E-01	-1.942E-02	0.000E+00	0.000E+00	0.000E+00
Average	-2.428E-06	-9.045E-02	6.146E-06	0.000E+00	0.000E+00	0.000E+00

Figure 3.2.5, The displacement data from the Rotator under the horizontal position

out that the maximum deflection of the whole system (model) is about 0.1877 inch.

Summary of the some important data generated from FEA model 1:

$\boldsymbol{\delta}_{max}$ = 0.1877" (see page 13)
f_b = 15.42 ksi < F_b= 21.60 ksi (see page 12)
f_v = 7.36 ksi < F_v= 14.40 ksi (see page 12)
$F_{react} = F_{apply} = W = W_{t1}$ = 48,000 lbs (see page 13)

Secondly, we built a model to simulate the loading case as showing from figure 1.1 of page 2, the Simulator rotator is supported by two places vertically, all dead weight of the rotator (20,000 lbs) plus the external live load (28,000 lbs, the total weight of the telescope) is applying to the rotator through four (4) connecting brackets as showing from figure 3.2.6 of page 14.

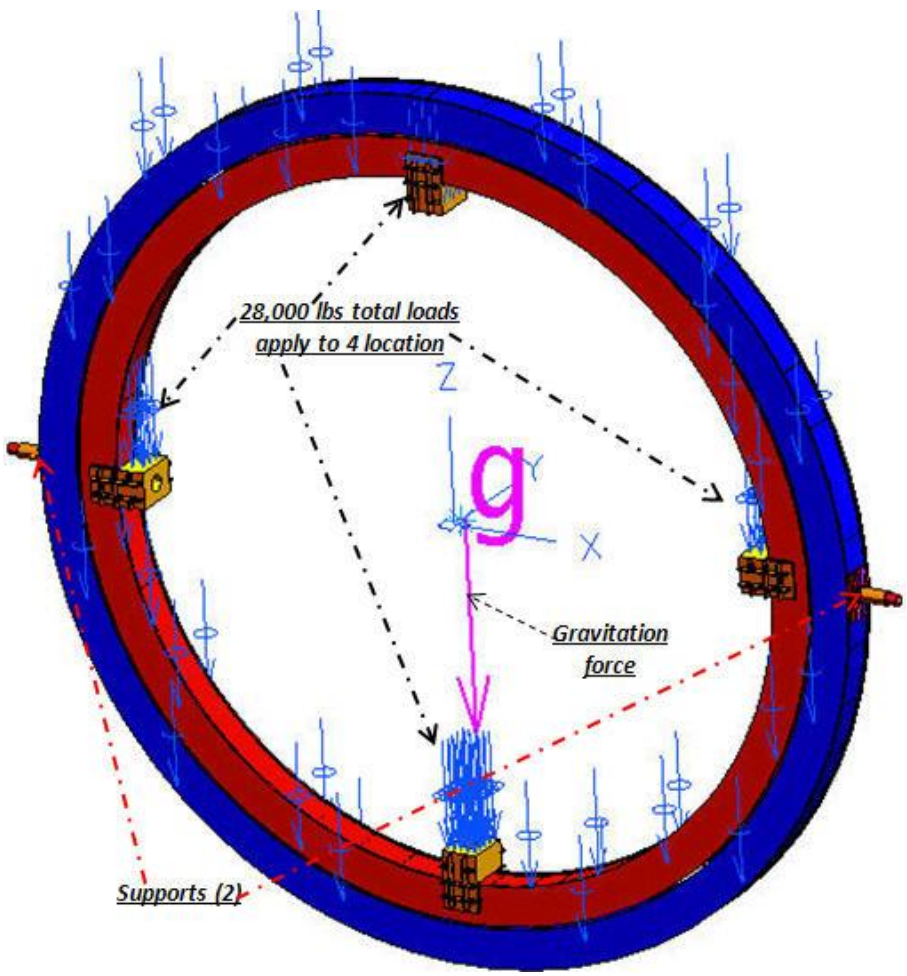

Figure 3.2 6, The Boundary Condition of the Rotator at the horizontal position

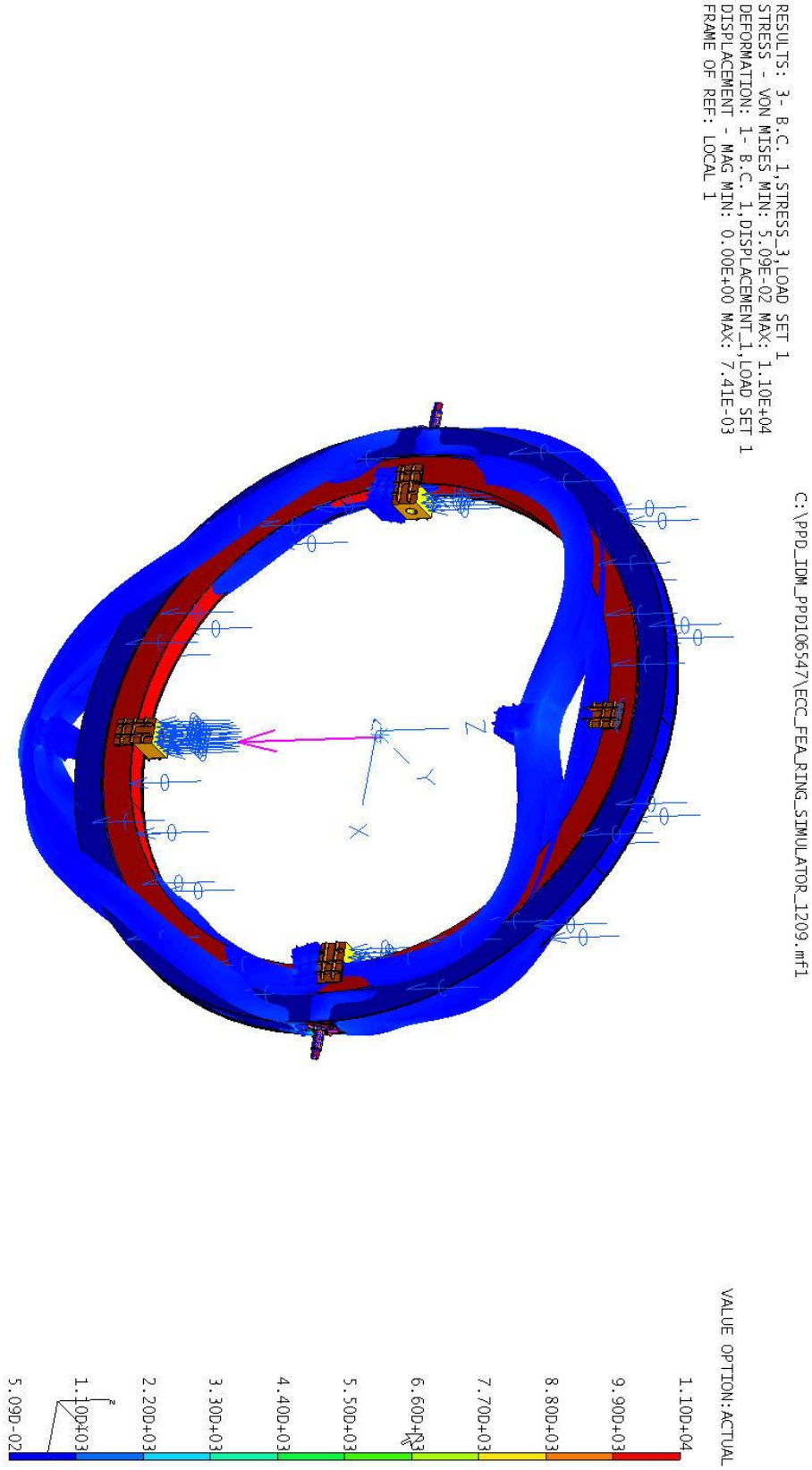

Figure 3.2.7, The stress and deformation diagram of the Rotator under vertical position

Per the boundary condition as we defined from page 1 and figure 3.2.6 of page 14, we found the FEA results of the stresses, deflection and reaction forces. Figure 3.2.2 of page 15 is the FEA graphic diagram which displays the stresses and deformation of the rotator under the defined boundary condition. We also can find the summary data results from figure 3.2.8, figure 3.2.8 and figure 3.2.10. from page 16 to page 17.

```
                                                                          Page 1

I-DEAS 12 NX Series m4:    Simulation                    13-Apr-10  13:48:26
C:\PPD_IDM_PPD106547\ECC_FEA_RING_SIMULATOR_1209.mf1

Group ID           : None
Result Set         : 3 -  B.C. 1,STRESS_3,LOAD SET 1
Report Type        : Contour                     Units          : IN
Result Type        : STRESS
Frame of Reference: 1 - CS286                    Data Component: Y-Component


         Stress-XX  Stress-XY  Stress-YY  Stress-XZ  Stress-YZ  Stress-ZZ


             191241       2957      36405     191258      36483       1857
Maximum   2.852E+03  2.010E+03  2.050E+03  6.173E+03  1.481E+03  5.751E+03

               3216      35389       2326       2915      35391         30
Minimum  -2.878E+03 -1.940E+03 -2.097E+03 -2.291E+03 -3.391E+03 -5.565E+03


Average   4.842E+01  3.203E-02 -6.153E-01 -9.344E-01  2.541E-01  3.353E+01
```

Figure 3.2.8, <u>The stress data from the Rotator under the vertical position</u>

Figure 3.2.8 of pg. 16 displayed the calculated maximum stress results under the boundary condition as we defined from page 1 and page 14. It is found out that the maximum bending stress in tensional direction f_{bt} = <u>5.751 ksi</u> < F_b= 21.60 ksi, maximum bending stress in compressive direction f_{bc} = <u>5.565 ksi</u> < F_b= 21.60 ksi, maximum shear stress f_v = <u>6.173 ksi</u> < F_v= 14.40 ksi.

Figure 3.2.9 from page 17 is the calculated data sheet of the total reaction force of the model under the boundary condition as defined from page 14. It is found out that the total reaction force of the model is about 48,000 lbs which is equal the total force (dead load plus the live load) applying to the model.

Figure 3.2.10 from page 17 is the calculated data sheet of the displacement (deflection) value of the model under the boundary condition as defined from page 14. It is found

```
                                                                    Page 1

I-DEAS 12 NX Series m4:    Simulation                    13-Apr-10  13:45:09
C:\PPD_IDM_PPD106547\ECC_FEA_RING_SIMULATOR_1209.mf1

Group ID           : None
Result Set         : 2 -  B.C. 1,REACTION FORCE_2,LOAD SET 1
Report Type        : Contour                      Units          : IN
Result Type        : REACTION FORCE
Frame of Reference: 1 - CS286                     Data Component: Y-Component


         Reacti-X   Reacti-Y   Reacti-Z   Reacti-RX  Reacti-RY  Reacti-RZ

Total    -8.585E-04 -6.330E-04  4.801E+04  0.000E+00  0.000E+00  0.000E+00

             36633       2209      36641         71         71         71
Maximum   1.683E+03  4.963E+02  2.660E+03  0.000E+00  0.000E+00  0.000E+00

              2209      36643      37265         71         71         71
Minimum  -1.200E+03 -4.298E+02 -3.696E+02  0.000E+00  0.000E+00  0.000E+00


Average  -3.111E-06 -2.293E-06  1.739E+02  0.000E+00  0.000E+00  0.000E+00
```

Figure 3.2.9, The reaction force data from the Rotator under the vertical position

```
                                                                    Page 1

I-DEAS 12 NX Series m4:    Simulation                    13-Apr-10  13:41:11
C:\PPD_IDM_PPD106547\ECC_FEA_RING_SIMULATOR_1209.mf1

Group ID           : None
Result Set         : 1 -  B.C. 1,DISPLACEMENT_1,LOAD SET 1
Report Type        : Contour                      Units          : IN
Result Type        : DISPLACEMENT
Frame of Reference: 1 - CS286                     Data Component: Y-Component


         Displa-X   Displa-Y   Displa-Z   Displa-RX  Displa-RY  Displa-RZ

             43377      22667         71          1          1          1
Maximum   2.010E-03  8.477E-04  0.000E+00  0.000E+00  0.000E+00  0.000E+00

             46482      21269       5696          1          1          1
Minimum  -1.934E-03 -4.995E-04 -7.395E-03  0.000E+00  0.000E+00  0.000E+00


Average   3.159E-05  8.660E-05 -2.214E-03  0.000E+00  0.000E+00  0.000E+00
```

Figure 3.2.10, The displacement data from the Rotator under the vertical position

out that the maximum deflection of the whole system (model) is about 0.007395 inch.

Summary of the some important data generated from FEA model 2:

$\boldsymbol{\delta}_{max}$ = 0.007395" (see page 17)
f_b = 5.751 ksi < F_b= 21.60 ksi (see page 16)
f_v = 6.173 ksi < F_v= 14.40 ksi (see page 16)
$F_{react} = F_{apply} = W = W_{t1}$ = 48,000 lbs (see page 17)

All the FEA calculated stresses from the defined boundary condition are lower than the respective allowable stresses per applicable codes.

4. The Calculation and discussion of the fastener group of the connector

As the introduction from page 2 and also as it shown from figure 4.1, we all knew that the Inner and Outer race frames are composed by three (3) segments which jointed with three connectors. Each connector joints two segments together through 36 bolts in side and 24 bolts in top and bottom (See drawings ME-436980 and ME-436979). For a simple and conservative approach, we only analyze the structural calculation with 36 bolts in inside and outer side of the race frame.

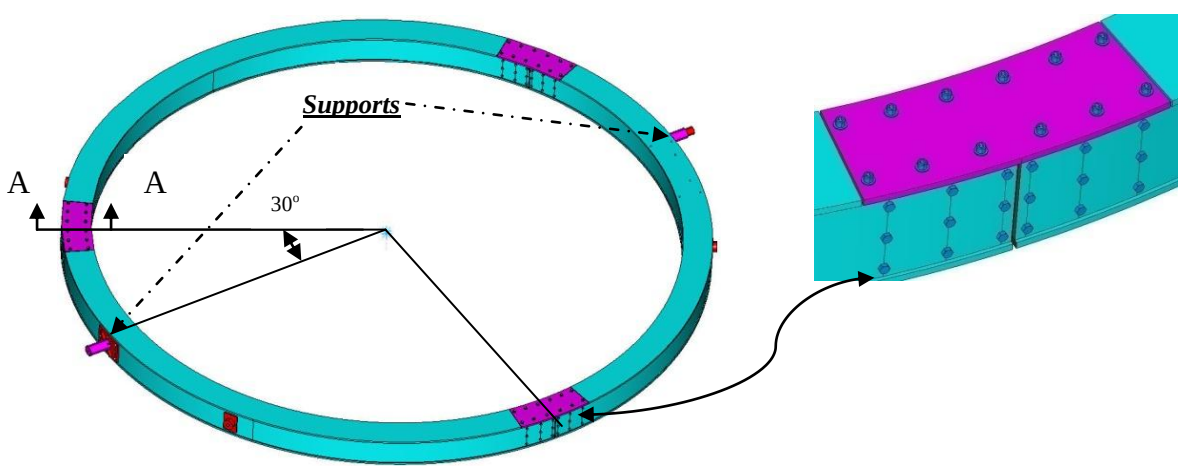

Figure 4.1, The configuration of the Outer race frame and the connector.

Assuming:

The fasteners subject to the bending moment M

$M_{z1} = M_{max}$ = - 1,192,289 lbs –in @ the support location (See page 5), we also knew that M_z = 0 at the center between two supports (See page 5), and the other two

connectors are located 30 degree away from each support as showing from figure 4,1 of page 18. Let's find out the moment of the Outer race frame at this location subject to the defined boundary condition:

The circumferential distance between the support and the 30 degree connector
L_{30} = (30/360) π 2 x 126.50 in = 66.24"= x

The moment at this location:
M_{x1} = [wa + ½ (w2a)] x – ½ w(a + x)^2
= (60.391 lbs/in x 198.71 in + 0.5 x 60.391 lbs/in x 2x 198.71 in) x 66.24 in – 0.5 x 60.391 lbs/in x (198.71 + 66.24)^2 in^2
= 1,589,760 lbs-in – 2,119,679 lbs-in
= -529,919 lbs-in

@ the connector location with x= e = 66.24"
V_1 = M_{x1}/e = -529,919 lbs-in ÷ 66.24" = 8,000 lbs @ the center of the connector which locates 30 degree away from the support. (See figure 3.1.1 of page 5)

From figure 4.2 of page 19 it can find that the group fastener 2D detail view of the connector, the centroid point defined as "0" where the moment M_{z1} located with shear force V_1.

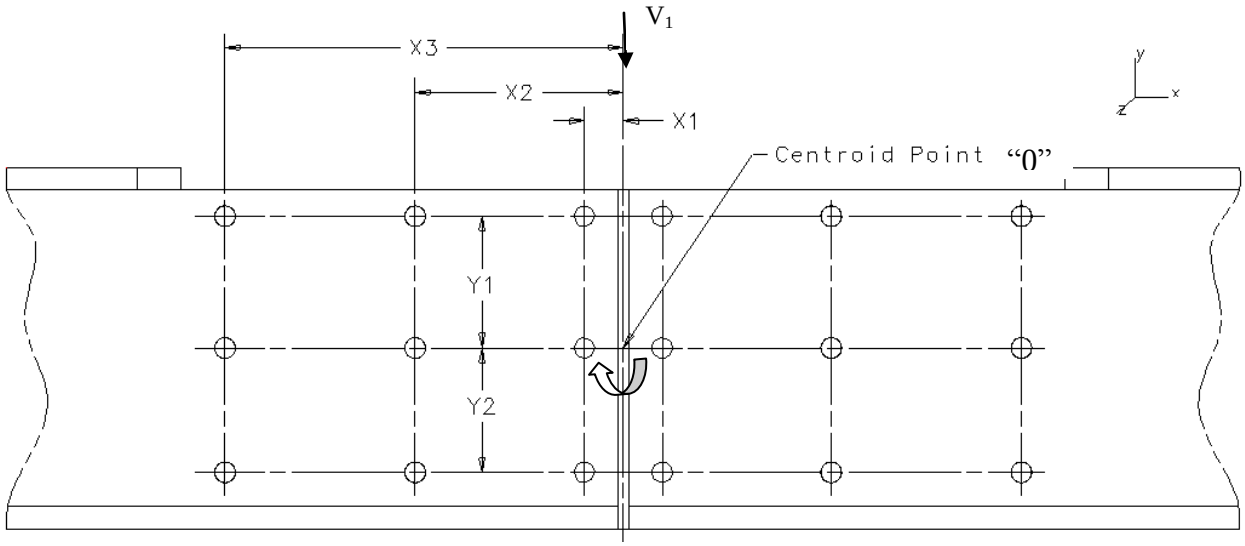

Figure 4.2. 2D view of the group of bolts (18) for the Outer race (Inner race) connector

Where:
(See detail G, sheet 2 of drawing ME-436905)
x_1 = (0.5625^o / 360°) x 2 π R_m= 1.242 in
x_2 = (3°/ 360°) x 2 π R_m = 6.624 in

$x_2 = (5.75^o / 360^o) \times 2\pi R_m = 12.695$ in

assuming: $y_1 \approx y_2 \approx 4.00$ in

Location "O" is the geometrical centroid of the bolt group, 18 bolts are located as showing in Figure 4.2.

The specification of bolts:

Grade 5, 5/8 -11, UNC,

$R_{av} = 8.10$ kip (allowable shear load for the bolt)

Where: $F_u = 120$ ksi, Tensile Strength (See ASME B18.2.1)

$F_v = 0.22$ Fu = 26.4 ksi

Allowable shear strength when threads are excluded in a shear plane

(See Table I-D, pg 4-5, ASD, 9th edition)

n = 18 for each side, there are 36 bolts for both sides of the connector.

Find out the local properties of the fastener group:

$\sum x_i^2 = 6(x_1)^2 + 6(x_2)^2 + 6(x_3)^2$

$= (9.255 + 263.26 + 966.98)\ in^2 = 1{,}239.5\ in^2$

$\sum y_i^2 = 12(y_1)^2 = 12(y_2)^2 = 192.00\ in^2$

$\sum x_i^2 + \sum y_i^2 = 1{,}239.5\ in^2 + 192.00\ in^2$

$= 1{,}431.50\ in^2$

$R_{v1} = f_{v1} = V_1/n$

$= -8{,}000$ lbs $\div$ 36

$= 222.22$ lbs $\downarrow$

The secondary torsional shear load of the bolt is subjected to the moment Mz

Pick the bolt of the most right top one as shown in figure 4.2,

(which is subjected by the largest 2nd shear force)

Where: $R_{vx1} = M_{x1} * y_1 \div 2 (\sum x_i^2 + \sum y_i^2)$

$= -529{,}919$ lbs-in x 4.00 in $\div$ 2 x $1{,}431.50\ in^2$

$= 740.37$ lbs. $\rightarrow$

$R_{vy1} = Mz * x_3 \div 2 (\sum x_i^2 + \sum y_i^2)$

$= (-529{,}919$ lbs-in) x (12.695 in) $\div$ 2 x $1{,}431.50\ in^2$

$= 2{,}349.75$ lbs $\downarrow$

The fasteners subject to the torsional moment T_t:

Find the torsional moment

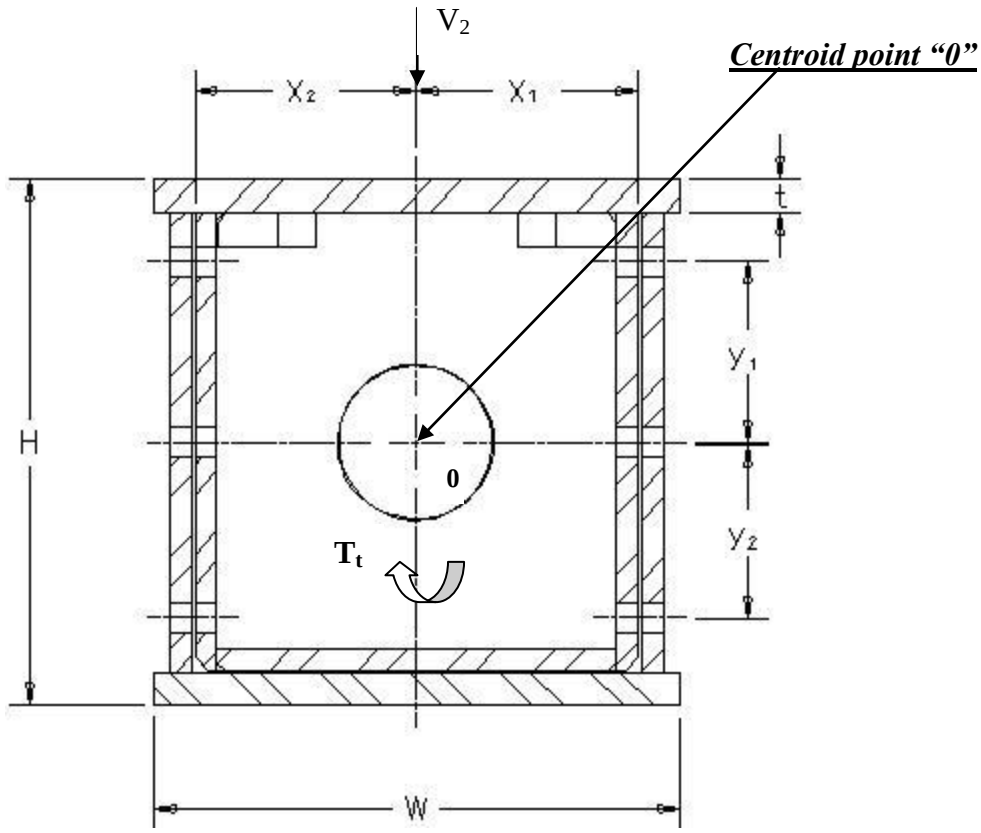

Figure 4.3, The cross section view A-A from figure 4.1 of page 18.

Find out the local properties of the fastener group:

$\sum x_i^2 = 6 \times [\, 3(x_1)^2 + 3(x_2)^2]$
$= 6 \times (78.80 + 78.80)\ in^2 = 945.6\ in^2$

$\sum y_i^2 = 6 \times 4(y_1)^2 = 6 \times 4(y_2)^2 = 384.0\ in^2$

$\sum x_i^2 + \sum y_i^2 = 945.6\ in^2 + 384.0\ in^2$
$= 1{,}329.6\ in^2$

Where:

$x_1 = 10.25\ in / 2 = 5.125\ in$
$x_2 = x_1 = 5.125\ in$

assuming: $y_1 \approx y_2 \approx 4.00\ in$
Location "O" is the geometrical centroid of the bolt group in the cut plane as showing in Figure 4.3.

The secondary torsional shear load of the bolt is subjected to the torsional moment T_c
Pick the bolt of the most right top one as shown in figure 4.3,
(which is subjected by the largest 2nd shear force)

We also conservatively assume that the torsional moment @ the connector $T_c = T_t$
= 874,837 lbs-in (per pg. 9).

Where: $R_{vx2} = T_c * y_1 \div (\sum x_i^2 + \sum y_i^2)$
$= 874{,}837$ lbs-in x 4.00 in $\div$ 1,329.6 in^2
$= 2.631$ kip. →

$R_{vy2} = Tc * x_i \div (\sum x_i^2 + \sum y_i^2)$
$= 874{,}837$ lbs-in x 5.125 in $\div$ 1,329.6 in^2
$= 3.372$ kip ↓

The resultant force applying to the most right top bolt:

$R = [(R_v + R_{vy1} + R_{vy2})^2 + (R_{vx1} + R_{vx2})^2]^{1/2}$
$= [(0.222 + 2.35 + 3.372)^2 + (0.74 + 2.631)^2]^{1/2}$ lbs
$= \underline{6.833 \text{ kip}} < R_{av} = 8.10$ kip
(The calculation has included the force from primary shear, moment and torsional moment)

Using (36) grade 5 strength structural bolts with specification of 5/8 -11, UNC – 2B meet the applications of the connector for the simulator outer race.

5. Discussions for some critical components

5.1, **Bearing mounting bracket (See drawing MD-436878)**

There are 12 bearing brackets connect the Outer race and Inner race together as showing from figure 1.1(2) of page 2. We had extensive calculations of the THK rails and bearing blocks from engineering note #185, the link of the note is:
http://des-docdb.fnal.gov:8080/cgi-bin/ShowDocument?docid=3061

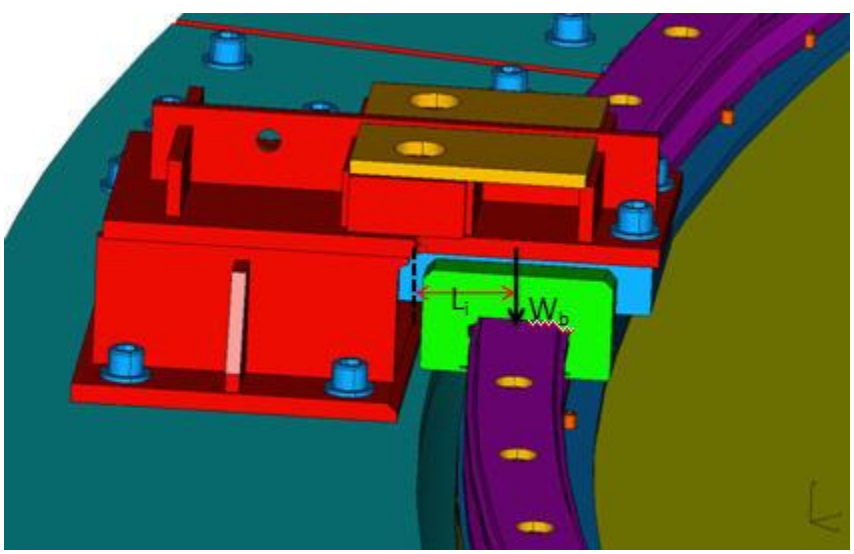

Figure 5.1, The THK rail, bearing, bracket and Rotator race frames.

When the force W_{i1} = 38,000 lbs. (the total weight of the Inner race with the Telescope together) apply to the Outer race through the LM guide system, it is reasonable to assume that there is only radial force P_r (vertical force) applying to the bearing blocks (12) uniformly (when the Simulator is in horizontal position as shown from figure1.1 (1) of page 2)

The calculated load for each bearing block (See figure 5.1 of page 23) can be found as:

$W_b = W_{i1}$ / number of the bearing blocks
= 38,000 lbs / 12 = 3,167 lbs

L_i is the distance of the load center to the weakest location of the bracket subject to the load W_b.
It is found that L_i = 6.25" – (5.591/2) – 0.75" = 2.71" (See drawing MD-436878).
The Moment M_b at this location is:
$M_b = L_i \times W_b$ = 8,583 lbs-in

Since the material of the bracket is ASTM A36 steel, so the allowable stresses are:

$F_{b1} = 0.6\ F_y$ = 21.6 ksi (Allowable bending stress per "ASM"
F_{v1} = 0.4 Fy = 14.4 ksi (Allowable shear stress per "ASM")

The allowable section modulus of the bracket at this location will be:

$S_{xxa} = M_b / F_{b1}$ = 8,583 lbs-in ÷ 21,600 psi
= 0.3974 in^3

Let's find out the geometric property of the bracket at this location

Figure 5.2 form page 23 is the cross-section details of the bearing bracket which is 2.71" away from center of the rail (L_i = 2.71").

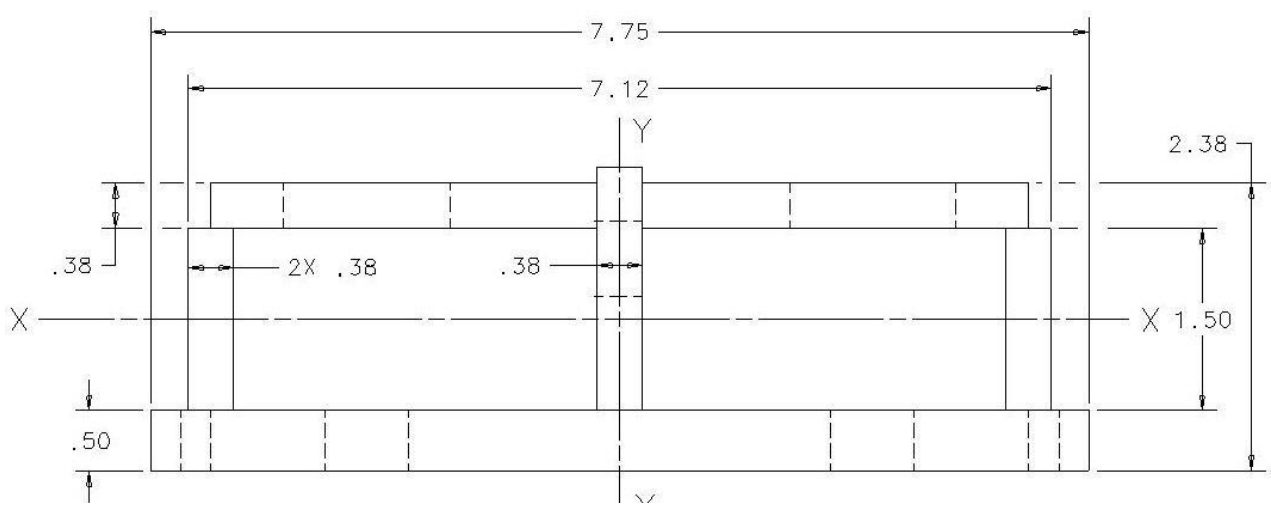

Figure 5.2, Cross-section view of the bearing brkt which is 2.71" away from ctr of rail

For simple reason, conservatively omits the middle gusset (0.38” x 1.50”), assume that the bottom plate is 0.38” thick too (instead of t= 0.50” actual), then it finds out that:

$I_{xx1} = [(2.38^3 \times 7.12) – (1.625^3 \times 6.38)]\ in^4 \div 12$
$= (95.987 – 27.377)\ in^4 \div 12$
$= 5.7175\ in^4$
$A = (2.38 \times 7.12) – (1.625 \times 6.38)\ in^2 = 6.578\ in^2$
$S_{xx1} = I_{xx} / y_i = 5.7175\ in^4 \div 1.1875\ in$
$= 4.8147\ in^3 > S_{xxa} = 0.3974\ in^3$

$f_b = M_b / S_{xx1} = 8{,}583$ lbs-in $\div 4.8147\ in^3$
$= 1.783$ ksi $< F_{b1} = 21.6$ ksi
$f_v = W_b \div A$
$= 0.482$ ksi $< F_{v1} = 14.4$ ksi

The design of the bearing bracket is satisfactory subject to the applying load.

5.2 **Inner race joint brackets (See drawing ME-436815 & ME-436816).**

As showing from figure 1.2 of page 3, there are total eight (8) Inner race joint brackets (4 brackets each side) to connect the telescope upper ring to the Rotator inner race together. Figure 5.3 of page 24 is showing the iso view of the configuration and application of the joint bracket.

Where: $W_{l2} = W_{telecope} /4 = 28{,}000$ lbs $\div 4 = 7{,}000$ lbs.
$L_1 = 6.50” – 1.24” = 5.26”$
$L2 = 6.50”$

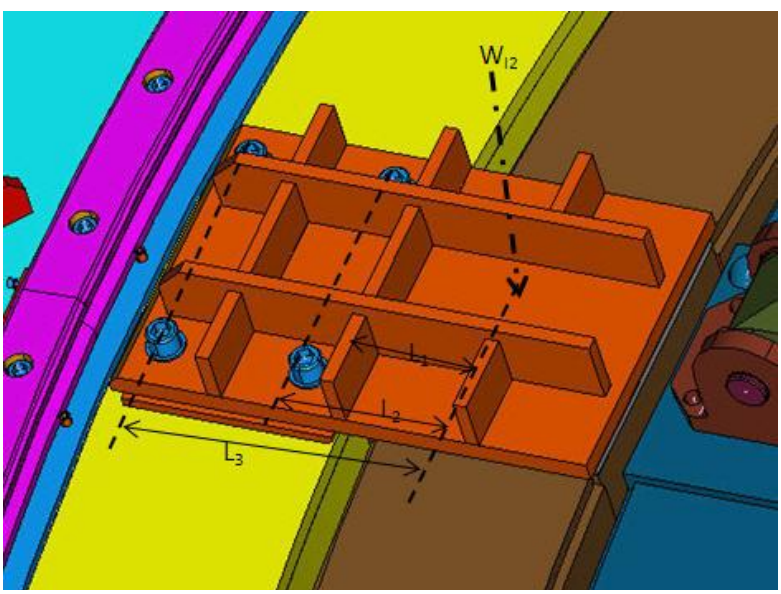

Figure 5.3, Configuration and application of the Inner race joint brackets

L3 = 5.25” + 6. 50” = 11.75”
(Per figure 5.5 of page 26)

There is about 1” gap between the outside diameter of the Upper ring and the inside diameter of the Inner race. It is necessary to study the mechanical behavior of the two joint brackets and the connecting joint bolts.

Figure 5.4 of page 25 is the cross section view of the joint brackets at the edge of the inside diameter of the Inner race frame. The moment M_{edge} subject to the applying force W_{l2} can be found as:

$M_{edge} = W_{l2} \times L_1 = 7{,}000$ lbs x 5.26 in
= 36,820 lbs-in (see figure 5.5 of page 26)

Find the geometrical property of the bracket at this location:
Conservatively omit the reinforcing gussets (4 x 2.40” x 0.50”)

$A_{brkt} =$ 11” x 0.75” x 2 = 16.50 in^2

$I_{xx\ brkt} = [(14.25^3 - 12.75^3) \times 11] \div 12\ in^4$
$= 752\ in^4$

$S_{xx\ brkt} = I_{xx\ brkt} / 7.125$
$= 105\ in^3$

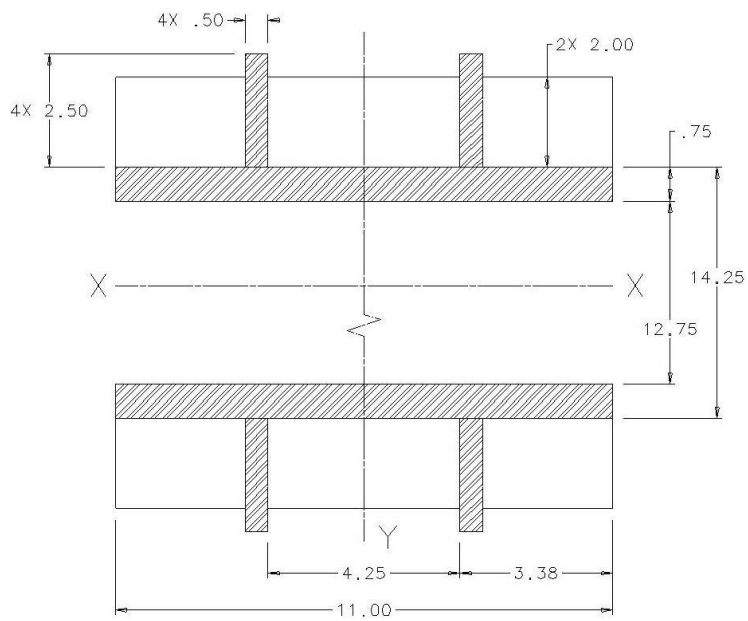

Figure 5.4, <u>The cross-section view of the joint brackets at the edge of the inside diameter of the Inner race frame.</u>

$f_b = M_{edge} \div S_{xx\ brkt} =$ <u>0.351 ksi</u> $< F_b = 21.6$ ksi
$f_v = W_{l2} \div A =$ <u>0.424 ksi</u> $< F_v = 14.4$ ksi

<u>*The connecting bolt (of the joint bracket) calculations*</u> (for the inner race):

There are total four (4) ¾-10, UNC, grade 8 bolts for each joint bracket in each side of the inner race frame as showing from figure 1.2 and figure 5.3. The material property of the connecting bolts are followings:

$F_u = 170$ ksi

The allowable tensile stress and the allowable shear stress:
$F_t = 0.33\ F_u = 56.1$ ksi (per Table I-B, ASD, 9th edition)
$F_v = 0.17\ F_u = 28.9$ ksi (per Table I-D, ASD, 9th edition)

The allowable loads in tension and shear for screw of ¾-10, UNC:
$P_t = F_t \times 0.4418\ in^2 = 24.78$ kip
$P_v = F_v \times 0.4418\ in^2 = 12.77$ kip

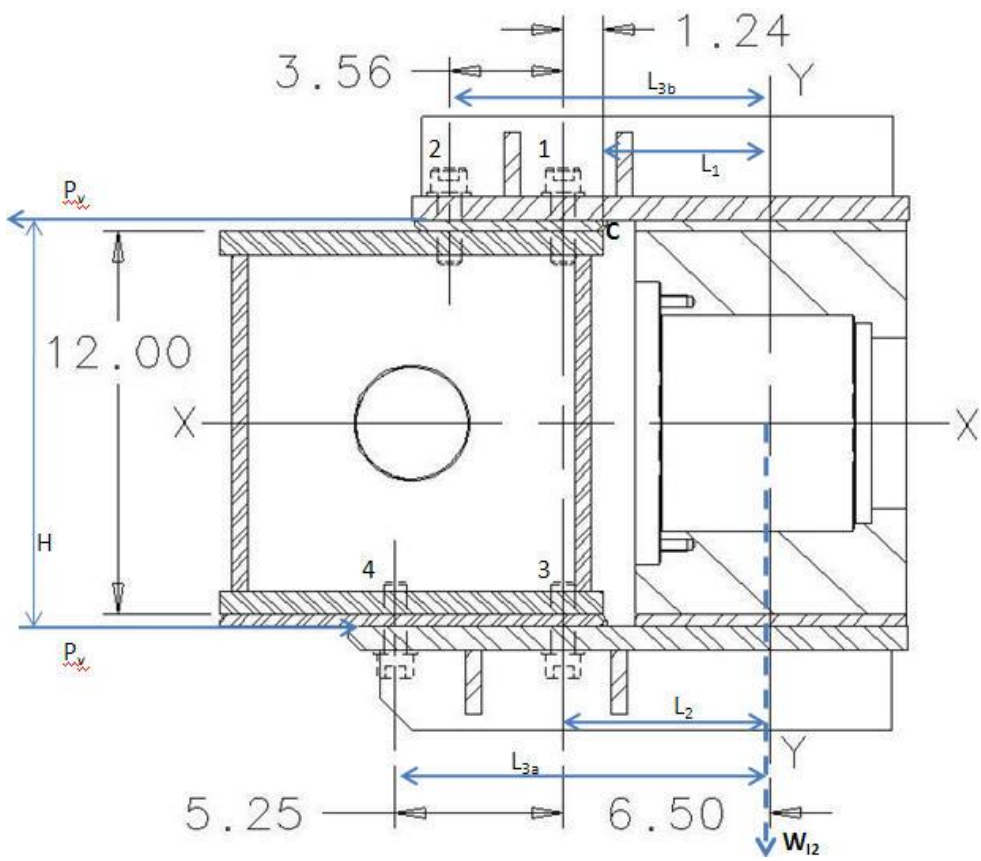

Figure 5.5, The details of the connecting bolt, bracket, inner race frame and upper ring in cross-section view.

Figure 5.5 of page 26 is the cross section details of the joint bracket, connecting bolt, inner race frame and upper ring. The equation @ the location C can be as:

$M_c = M_{edge} = P_{t1}$ x1.24" + P_{t2} x (3.56" + 1.24") (eq 5.1)

Since the joint bracket is (and must be) in elastic linear condition, then:

P_{t1}/ P_{t2} = 1.24" / (3.56" + 1.24")

$P_{t2} = 4.80\ F_{t1}/1.24 = 3.871\ F_{t1}$

Equation 5.1 becomes:

(1.24 P_{t1} + 3.871 F_{t1} x 4.8) in = 36,820 lbs-in

19.8208 P_{t1} = 36,820 lbs-in

$\underline{P_{t1} = 1.858 \text{ kip}} < P_t = 24.78$ kip *

$\underline{P_{t2} = 3.871\ P_{t1}} = 7.192$ kip < $P_t = 24.78$ kip*

*: 1. There are two bolts in each row, so the actual value of P_{t1} and P_{t2} will be smaller.
2. As for simple but conservative approach, the calculation only use one side of the bolts, has not included the another side of the bolts, otherwise, the value of P_{t1} and P_{t2} will be even more smaller.

The shear force of the connecting bolts subject to the applying load:

Conservatively pick the most outside location bolt #4 to calculate the shear force subject to the applying load W_{l2}.

W_{l2} x L_{3a} = 2 P_{vi} H (eq. 5.2)

Where H is the distance between two joint brackets in Y direction,

H = 12.75" (see figure 5.4 of page 25)

Equation 5.2 becomes:

P_{vi} = (7,000 lbs x 11.75 in) ÷ (12.75 in x 2)

= $\underline{3.225 \text{ kip}} < P_v = 12.77$ kip

<u>The calculted tension and shear forces of the connecting bolts are far below the allowable forces under the defined boundary condition.</u>

5.3, ***<u>The flange shaft (short and long, see drawing MD-480310 & MD-480311)</u>***

There are two (2) flange shafts (One is the flange shaft long to connect with the drive system, another one is the flange shaft short for support and rotating) to support the simulator through the bearing pillow blocks as showing from figure 1.1 of page 2 and figure 1.2 of page 3. Figure 5.6 of page 28 is the iso view of the configuration and application of the flange shaft long with and without the bearing pillow block.

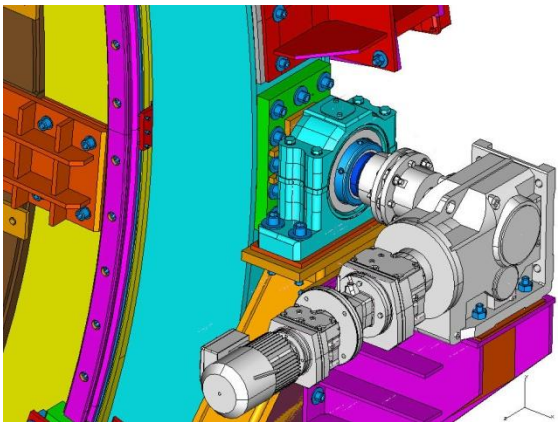

(1)

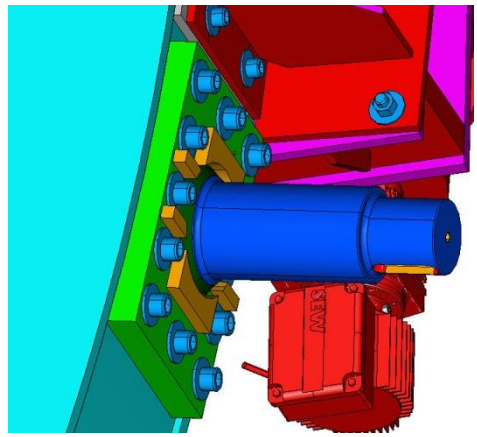

(2)

Figure 5.6, <u>The configuration and the application of the flange shaft</u>

We will analysis and calculate the flange shaft in weld, shaft and fastener bolts:

5.3.1 Materials for the flange shafts:

The flange shaft material properties:

Flange: ASTM A572, Gd. 50

F_u = 65 ksi
F_y = 50 ksi
F_b = 30 ksi
F_v = 20 ksi

Shaft: ASTM 108, Cold Finish C1018

F_u = 64 ksi
F_y = 54 ksi
F_b = 32.4 ksi
F_v = 21.6 ksi

Weld metal:

E70XX,
F_u = 70 ksi
F_y = 60 ksi
$F_b = F_v$ = 21 ksi

Fasteners:

Twelve (12) ¾- 10, UNC, Grade 8 socket head screw for each flange shaft.
F_u = 170 ksi
$F_t = 0.33\ F_u$ = 56.1 ksi (per Table I-B, ASD, 9th edition)
$F_v = 0.17\ F_u$ =28.9 ksi (per Table I-D, ASD, 9th edition)

For hex cap head screw, grade 8 material property see section 5.3.5, pg 33.

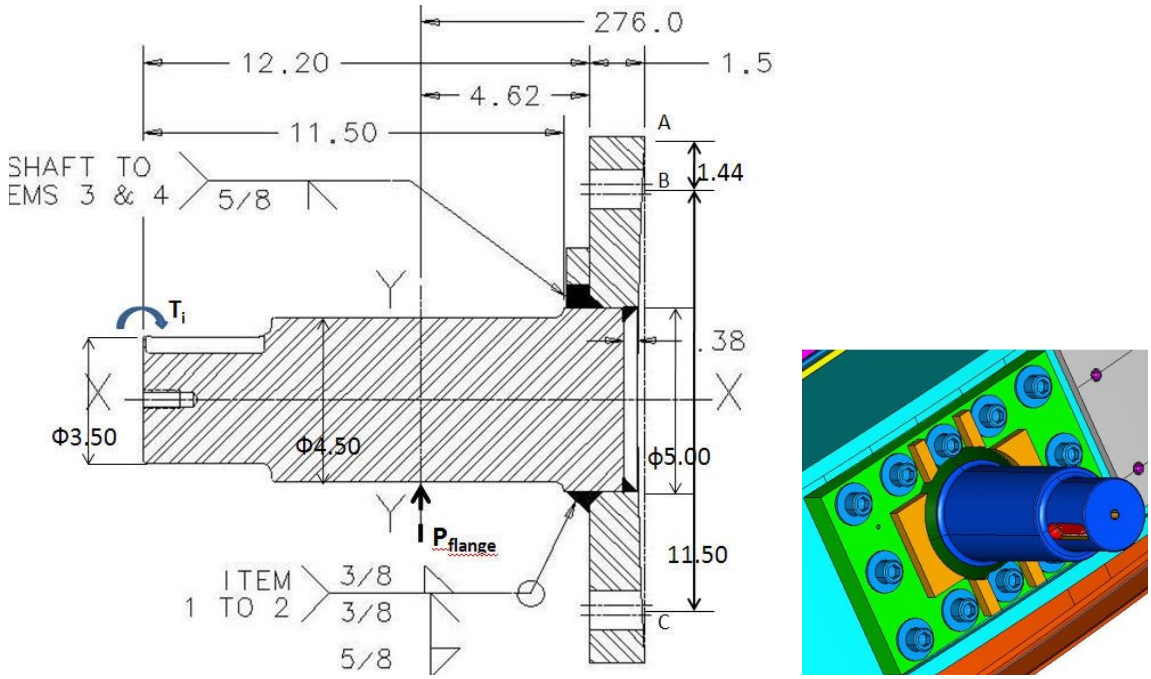

Figure 5.7, Dimensions, welds and configuration of the flange shaft long.

5.3.2 Define the boundary condition:

Per drawing ME-480107, it is found that the central distance between two pillow blocks is 276”. Also, from figure 5.7 of page 28, it is found out that:

$P_{flange} = W_{t1} \div 2 = 24{,}000$ lbs.
The force applies to each pillow block (and flange shaft)

$M_{4.62} = P_{flange} \times 4.62” = 110{,}880$ lbs-in
The bending moment at the root of the weld which is also the edge of the flange.

$T_i = 23{,}900$ lbs-in
The output torque from the motor and gear reducer (it is limited to such value)

Assuming the model as the fixed end at the flange bolt head contact surface, which is 4.62 in away from the concentrated force $P_{flange} = 24{,}000$ lbs applying to the shaft as showing from figure 5.7 of page 29.

5.3.3 Weld calculations:

Per drawing MD-480310 and figure 5.7 of page 29, it is found out that there are five (5) different welds between shaft, flange plate and gussets, for a simple and conservative approach, the calculation only consider the 5/8" all round fillet weld between shaft and the flange plate.

Treats the welds as a line and find its geometrical properties:

$L_{w1} = 2\pi\ r_{w1} = 15.71$ in
where L_{w1} is the length of the welds around $r_{w1} = 2.50$" shaft

$I_{w1} = \pi\ r_{w1}^3 = 49.09\ in^3$
$S_{w1} = \pi\ r_{w1}^2 = 19.63\ in^2$
$J_{w1} = 2\ \pi\ r_{w1}^3 = 98.18\ in^3$
$r_{j1} = 2.50$ in

$f_{bw1} = M_{4.62} \div S_{w1} = 110{,}880$ lbs-in $\div$ 19.63 in^2
$= 5{,}648$ lbs/in
$f_{v1} = P_{flange} \div L_{w1} = 24{,}000$ lbs $\div$ 15.71 in
$= 1{,}528$ lbs/in
$f_{v2} = (T_i\ r_{j1}) \div J_{w1} = (23{,}900$ lbs-in x 2.50 in$) \div 98.18\ in^3$
$= 609$ lbs/in

The resultant force per inch subject the applying boundary condition:
$f_r = [(f_{v1} + f_{v2})^2 + f_{bw1}^2]^{1/2} = [2{,}137^2 + 5{,}648^2]^{1/2}$ lbs/in
$= 6{,}039$ lbs/in

Compute the calculated weld fillet size C:
$C = f_r \div 0.707\ F_v = 6{,}039$ lbs-$in^{-1} \div 0.707$x 21,000 lbs-in^{-2}
= <u>0.407 in</u> < 0.625 in (designed weld size from drawing MD-480310)

The above calculations have not included:

- The 0.38" fillet welds from another end of the shaft
- The 0.38" grove welds between shaft and flange plate.
- The 0.63" fillet welds between gussets and fillet welds.
- The 0.19" fillet welds between gussets and flange plate.

The designated welds should be satisfactory subject to the applying loads under the boundary condition.

5.3.4 Shaft design:

The geometrical properties of the shaft:

For section with shaft diameter $d_2 = 4.50$ in
$A_2 = 15.904\ in^2$

$I_{4.50} = (\pi\ d_2^4)\ /64\ in^4 = 20.129\ in^4$
$S_{4.50} = 8.946\ in^3$
$J_{4.50} = (\pi\ d_2^4)\ /32\ in^4 = 40.258\ in^4$

For section with shaft diameter $d_3 = 3.50$ in
$A_3 = 9.621\ in^2$
$I_{3.50} = (\pi\ d_3^4)\ /64\ in^4 = 7.366\ in^4$
$S_{3.50} = 4.209\ in^3$
$J_{3.50} = (\pi\ d_3^4)\ /32\ in^4 = 14.732\ in^4$

The calculations of the shaft approaches with two different applicable codes:

<u>Per "Allowable Stress Design" AISC 9th edition:</u>

For section with shaft diameter $d_2 = 4.50$ in

$f_{b2} = M_{4.62} \div S_{4.50} = 110{,}880$ lbs-in $\div 8.946\ in^3$
$= \underline{12.394\ ksi} < F_b = 32.4$ ksi (See section 5.3.1 of page 28)

$f_{v21} = P_{flange} \div A_2 = 24{,}000$ lbs $\div 15.904\ in^2$
$= 1.509$ ksi
$f_{v22} = (T_i\ r_{j2}) \div J_{4.50} = (23{,}900$ lbs-in x 2.25 in$) \div 40.258\ in^4$
$= 1.336$ ksi
$f_{v2} = f_{v21} + f_{v22} = 1.509$ ksi $+ 1.336$ ksi
$= \underline{2.845\ ksi} < F_v = 21.6$ ksi (See section 5.3.1 of page 28)

For section with shaft diameter $d_3 = 3.50$ in

$f_{v3} = (T_i\ r_{j2}) \div J_{3.50} = (23{,}900$ lbs-in x 1.75 in$) \div 14.732\ in^4$
$= \underline{2.839\ ksi} < F_v = 21.6$ ksi (See section 5.3.1 of page 28)

Per application at the shaft section of $d_3 = 3.50$ in, there is no bending moment and direct shear force.

<u>Per "Standard for Design of Transmission Shaft" ASME B106.1:</u>
(per chapter 9, "Power Transmission Shafting", "Machine Design", by Hall, Holowenko and Laughlin, Mcgraw-Hill,1961)

ASME code states that for steel under definite specification:

The allowable stress F_s is the lesser of:
$F_{s1} = 0.30\ F_y = 0.3 \times 54$ ksi $= 16.2$ ksi
$F_{s1} = 0.18\ F_u = 0.18 \times 64$ ksi $= 11.52$ ksi

So pick:

$F_{s4.5}$ = 11.52 ksi

<u>For the section with shaft diameter d_2 = 4.50 in, to find out the computed shaft diameter:</u>

$d_{i2}^3 = (16 / \pi F_{s4.5}) \times [(K_b M_{4.62})^2 + (K_t T_i)^2]^{1/2}$ (eq. 5.3)
$= [16 / (\pi \times 11.52 \text{ ksi})] \times [(1.5 \times 110{,}880 \text{ lbs-in})^2 + (1.0 \times 23{,}900 \text{ lbs-in})^2]^{1/2}$
$= 74.2681 \text{ in}^3$

d_{i2} = <u>4.2034 in</u> < d_2 = 4.50 in (See drawing MD-480310 & MD-480311)

where:

K_b: Combined shock and fatigue factor applied to the bending moment. assuming the rotating shaft with load gradually applied, K_b =1.50

K_t: Combined shock and fatigue factor applied to the torsional moment assuming the rotating shaft with load gradually applied, K_t =1.00

d_i : The computed shaft diameter per code of ASME B106.1 under the defined boundary condition.

<u>For the section with shaft diameter d_2 = 3.50 in, to find out the computed shaft diameter</u>:

Per ASME code, the value of the allowable stress Fs has to be reduced by 25% if a key way is presented, so:

$F_{s3.5}$ = 11.52 ksi x (1- 0.25) = 8.64 ksi

Applying the equation 5.3, then:

$d_{i3}^3 = (16 / \pi F_{s3.5}) \times [(K_b M_{4.62})^2 + (K_t T_i)^2]^{1/2}$ (eq. 5.3)
$= [16 / (\pi \times 8.64 \text{ ksi})] \times [(1.0 \times 23{,}900 \text{ lbs-in})^2]^{1/2}$
$= 14.089 \text{ in}^3$

d_{i3} = <u>2.4152 in</u> < d_3 = 3.50 in (See drawing MD-480310 & MD-480311)

The shaft design meets two different applicable codes under the defined boundary condition.

5.3.5 Fastener Design:

As showing from figure 5.7 of page 29, there are twelve (12) ¾-10, UNC, grade 8, socket head screws for each flange shaft. Let's compute the working condition of the designated screws under the defined boundary condition:

The material properties of the connecting bolts are followings:

F_u = 150 ksi (This is based on hex head cap screw materials)

The allowable tensile stress and the allowable shear stress:

$F_t = 0.33\ F_u = 49.5$ ksi (per Table I-B, ASD, 9th edition)

$F_v = 0.17\ F_u = 25.5$ ksi (per Table I-D, ASD, 9th edition)

The allowable loads in tension and shear for screw of ¾-10, UNC:

$P_t = F_t \times 0.4418\ in^2 = 21.87$ kip

$P_v = F_v \times 0.4418\ in^2 = 11.27$ kip

5.3.5.1, *The shear force P_{v1} due to the primary shear force:*

$P_{v1} = P_{flange} \div$ number of the screws

$= 24{,}000$ lbs $\div 12 = 2.00$ kip

5.3.5.2, *The secondary shear forces R_{vi} subjects to the torsional moment T_i:*

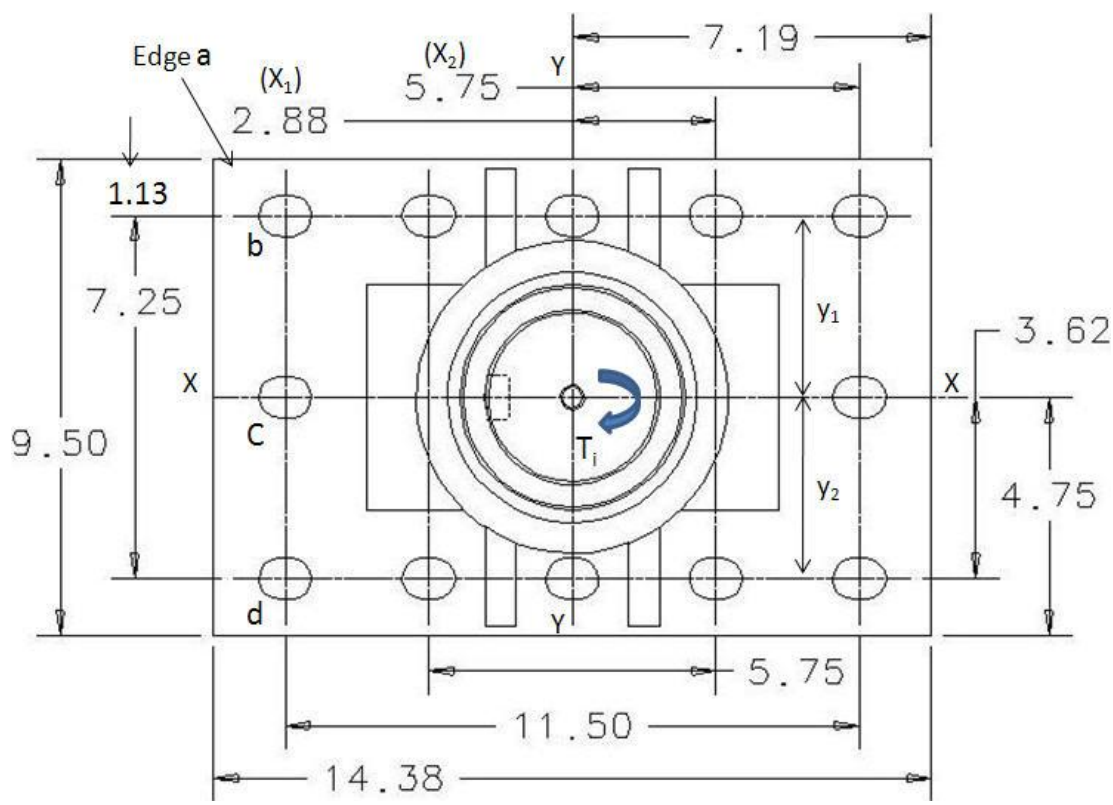

Figure 5.8, The flange bolt location and dimensions

From figure 5.8 of page 33 it can find that the group fastener 2D detail view of the flange shaft, the centroid point of the fastener group defined as the geometrical center of the flange shaft where the torsional moment T_i located with shear force V_1.

Where:

(See figure 5.9 of page 33 and drawing MD-480310)

$x_1 = 2.88$ in

$x_2 = 5.75$ in

$y_1 = y_2 = 3.62$ in

Find out the local properties of the fastener group:

$$\sum x_i^2 = 4(x_1)^2 + 6(x_2)^2$$
$$= (33.0625 + 198.375)\ \text{in}^2 = 231.4375\ \text{in}^2$$
$$\sum y_i^2 = 10(y_1)^2 = 10(y_2)^2 = 131.40625\ \text{in}^2$$

$$\sum x_i^2 + \sum y_i^2 = 165.3125\ \text{in}^2 + 231.4375\ \text{in}^2$$
$$= 396.75\ \text{in}^2$$

The secondary torsional shear load of the bolt is subjected to the torsional moment T_i

Pick the bolt of the most right top one as shown in figure 5.8

(which is subjected by the largest 2nd shear force)

Where: $R_{vx} = M_{x1} * y_1 \div (\sum x_i^2 + \sum y_i^2)$

$= 23{,}900$ lbs-in x 3.625 in $\div$ 396.75 in^2

$= 218.37$ lbs. $\rightarrow$

$R_{vy} = Mz * x_1 \div (\sum x_i^2 + \sum y_i^2)$

$=$ (23,900 lbs-in) x (5.75 in) $\div$ 396.75 in^2

$= 346.38$ lbs $\downarrow$

$P_v = [(P_{v1} + R_{vy})^2 + R_{vx}^2]^{1/2} = [(2000 + 347)^2 + 219^2]^{1/2}$ lbs

$= \underline{2.358\ \text{kip}} < P_v = 11.27$ kip

5.3.5.3, *<u>To find the tensional load of the screws:</u>*

Reference drawings: detail D of ME-436946, section C-C, detail F and view M-M of drawing ME-43690500

Reference figures: Figure 5.6 of page 27, figure 5.7 of page 28, figure 5.8 of page 33.

5.3.5.3.1, *<u>When the flange shaft support the simulator vertically (See figure 1.1 of page 2):</u>*

Take the static equation at location A of figure 5.7 in pg. 29:

P_{flange} lbs x (4.62 x 1.50) in = ($P_{bolt\text{-}B}$ x $\underline{AB}$ + $P_{bolt\text{-}C}$ x $\underline{AC}$) lbs-in (eq. 5.3)

Where: P_{flange} =24,000 lbs
Line $\underline{AB}$ = 1.44 in
Line $\underline{AC}$ = (11.50 + 1.44) in = 12.94 in
$P_{bolt\text{-}B}$: bolt force in row B, three (3) bolts in row B.
$P_{bolt\text{-}C}$: bolt force in row C, three (3) bolts in row C.

Also:

——— = ——— (eq. 5.4)

From eq. 5.4:

$P_{bolt\text{-}C}$ = ($P_{bolt\text{-}B}$ x $\underline{AC}$) ÷ $\underline{AB}$
=($P_{bolt\text{-}B}$ x 12.94) ÷ 1.44
= 8.986 $P_{bolt\text{-}B}$

Substitute the $P_{bolt\text{-}C}$ = 8.986 $P_{bolt\text{-}B}$ to equation 5.3, then:

146,880 lbs-in $_{\text{(bending moment at location A)}}$ = (1.44 $P_{bolt\text{-}B}$ + 8.986 $P_{bolt\text{-}B}$ x 12.94) lbs-in
117.719 $P_{bolt\text{-}B}$ + 146,880 lbs-in
$P_{bolt\text{-}B}$ = 1.248 kip

Since there are three (3) bolts in row B, so each bolt in row B has the tensional load:

P_{tB} = $\underline{0.416\ kip}$ < P_t = 21.87 kip *

Each bolt in row C has the tension load of:

P_{tC} = 8.986 x 0.416 kip
= $\underline{3.738\ kip}$ < P_t = 21.87 kip *

*: As showing from the related drawing and figures 5.6, 5.7 and 5.8, the calculations of the tensional load of the bolts of the flange under the vertical support condition have not included the factor of the central 3 rows (6 bolts). The actual working tensional load of the bolt even will be lower than it is presented.

5.3.5.3.2, *When the flange shaft support the simulator horizontally (See figure 1.2 of page 3 and figure 5.8 of page 33)*

Applying the same principles as it was presented from section 5.3.5.3.1, the static equation of edge a (the edge which directly contacts with the mounting surface of the outer race frame) under the defined boundary condition:

P_{flange} lbs x (4.62 x 1.50) in = ($P_{bolt\text{-}b}$ x <u>ab</u> + $P_{bolt\text{-}c}$ x <u>ac +</u> $P_{bolt\text{-}d}$ x <u>ad</u>) lbs-in (eq. 5.5)

Where:

Where: P_{flange} =24,000 lbs

Line <u>ab</u> = 1.13 in

Line <u>ac</u> = (3.62 + 1.13) in = 4.75 in

Line <u>ad</u> = (7.25 + 1.13) in = 8.38 in

$P_{bolt\text{-}b}$: bolt force in row b, assuming three (3) bolts in row b.

$P_{bolt\text{-}c}$: bolt force in row c, assuming two(2) bolts in row c.

$P_{bolt\text{-}d}$: bolt force in row d, assuming three (3) bolts in row d.

Referring to equation 5.4, we can also have:

$$\frac{\quad}{\quad} = \frac{\quad}{\quad} = \frac{\quad}{\quad} \qquad \text{(eq. 5.6)}$$

$$\Rightarrow \frac{\quad}{\quad} = \frac{\quad}{\quad} = \frac{\quad}{\quad}$$

$P_{bolt\text{-}c}$ = 4.222 $P_{bolt\text{-}b}$

$P_{bolt\text{-}d}$ = 7.444 $P_{bolt\text{-}b}$

Substitute the $P_{bolt\text{-}c}$ = 4.222 $P_{bolt\text{-}b}$ and $P_{bolt\text{-}d}$ = 7.444 $P_{bolt\text{-}b}$ to equation 5.5, then:

P_{flange} lbs x (4.62 x 1.50) in
= ($P_{bolt\text{-}b}$ x 1.13 + 4.222 $P_{bolt\text{-}b}$ x 4.75 + 7.444 $P_{bolt\text{-}b}$ x 8.38) lbs-in

146,880 lbs-in = 83.56 $P_{bolt\text{-}b}$

$P_{bolt\text{-}b}$ = 1.758 kip

Since there are three (3) bolts in row b, so each bolt in row b has the tensional load:

P_{tb} = <u>0.586 kip</u> < P_t = 21.87 kip **

$P_{bolt\text{-}c}$ = 4.222 $P_{bolt\text{-}b}$ = 7.422 kip

Since there are two (2) bolts in row c, so each bolt in row c has the tensional load:

P_{tc} = <u>3.711 kip</u> < P_t = 21.87 kip

$P_{bolt\text{-}d}$ = 7.444 $P_{bolt\text{-}b}$ = 13.087 kip

Since there are three (3) bolts in row d, so each bolt in row d has the tensional load:

P_{td} = <u>4.362 kip</u> < P_t = 21.87 kip **

**: As showing from the related drawing and figures 5.6, 5.7 and 5.8, the calculations of the working tensional load of the flange under the horizontal support condition have not included 2 out 5 bolts of rows b & d (4 bolts total). The actual working tensional load of the bolt even will be lower than it is presented.

Summary for the fasteners of the flange shaft:

The most four (4) corner bolts screws will have the largest computed values both in shear and tension under the defined boundary condition:

p_v = <u>2.358 kip</u> < P_v = 11.27 kip (See page 34)

p_t = <u>4.362 kip</u> < P_t = 21.87 kip (See page 37)

The computed loads (shear and tension) of the flange shaft bolts (3/4"-10, UNC, grade 8, total 12 for each flange) are far below the allowable loads under the defined boundary condition, the application is satisfactory.

6. <u>Conclusions:</u>

The structures of the DECam Simulator Rotator frames are analyzed and calculated by two approaches:

- Manual mathematically computation method.
- Finite Element Analysis (FEA) method.

The computed working data under different boundary condition listed as following:

<u>Summary of the manual mathematical approach</u> <u>results</u>:

M_{max} = 1,192,289 lbs -in (at the support location) (see page 5)
V_{max} = W/2 =24,000 lbs (see page 5)
T_t = <u>874,837 lbs-in</u> (see page 9)
Θ = 0.0122 radian (see page 9)
$\boldsymbol{\delta}_{max}$ = 0.1962" @ the center between the supports (see page 7)
f_b = <u>10.728 ksi</u> < F_b= 21.60 ksi (see page 7)
f_v = <u>5.608 ksi</u> < F_v= 14.40 ksi (see page 9)

<u>Summary results of FEA model 1</u> (Simulator supports horizontally):

$\boldsymbol{\delta}_{max}$ = 0.1877" (see page 13)

f_b = <u>15.42 ksi</u> < F_b= 21.60 ksi (see page 12)
f_v = <u>7.36 ksi</u> < F_v= 14.40 ksi (see page 12)
$F_{react} = F_{apply} = W = W_{t1}$ = 48,000 lbs (see page 13)

<u>Summary results of FEA model 2</u> (Simulator supports vertically):

$\boldsymbol{\delta}_{max}$ = 0.007395" (see page 17)
f_b = <u>5.751 ksi</u> < F_b= 21.60 ksi (see page 16)
f_v = <u>6.173 ksi</u> < F_v= 14.40 ksi (see page 16)
$F_{react} = F_{apply} = W = W_{t1}$ = 48,000 lbs (see page 17)

The computed working bending stress and shear stress both are much smaller than the allowable bending stress and allowable shear stress respectively under the defined boundary condition.

The computed fastener (bolt) working shear load of the connector is lower than the allowable shear load under the defined boundary condition with consideration of the applying shear force, bending moment and torsional moment (See section 4, page 18 to page 22 for the calculation details).

Section 5.1 is the calculation for the bearing mounting bracket structures, the calculated maximum working shear stress and bending stress versus the allowable stresses can be found from page 24 and briefed as following:

f_b = 1.783 ksi < F_{b1} = 21.6 ksi
f_v = 0.482 ksi < F_{v1} = 14.4 ksi

The calculated working stresses (shear & bending), fastener's computed working loads (tension and shear) are all lower than their respective allowable stresses and loads, the details of the results can be found on page 26 & page 27.

f_b = <u>0.351 ksi</u> < F_b =21.6 ksi
f_v = <u>0.424 ksi</u> < F_v =14.4 ksi
p_t = 7.192 kip < P_t = 24.78 kip
p_v = <u>3.225 kip</u> < P_v = 12.77 kip

Section 5.3 (page 27 to page 37) is the detail analysis and calculations for the flange shaft of the rotator under the defined boundary condition. The analyses are approached by:

- Weld size calculation:

  C = <u>0.407 in</u> < 0.625 in
  (See details on page 30)

- Shaft design:
  f_{b2} = <u>12.394 ksi</u> < F_b = 32.4 ksi
  f_{v2} = <u>2.845 ksi</u> < F_v = 21.6 ksi
  f_{v3} = <u>2.839 ksi</u> < F_v = 21.6 ksi
  d_{i2} = <u>4.2034 in</u> < d_2 = 4.50 in
  d_{i3} = <u>2.4152 in</u> < d_3 = 3.50 in
  (See details from page 30 to page 32)

- Fastener Calculations:

  p_v = <u>2.358 kip</u> < P_v = 11.27 kip (See page 34)
  p_t = <u>4.362 kip</u> < P_t = 21.87 kip (See page 37)

Based on the analyzed and calculated results, it is indicating that the design of the DECam Simulator Rotator race frames is satisfactory per the applicable codes under the defined boundary condition.

7. References:

1. The directory of viewing the pdf format of the DECam Simulator Rotator project drawings which related to the engineering note #246:

   M:\Internet\DWGS\DECAM_436\pdf

2. Some documents from: http://des-docdb.fnal.gov/ relate to the eng. note #246: Doc. #1528, Doc. #3061 and Doc. # 3393

3. "Aluminum Design Manual", 6th edition, by Aluminum Association.

4. "Strength of Materials", 2nd edition, by Timoshenko, 1934

5. "Design of Weldments" by O. Blodgett, 1963

6. "Roark's Formulars for Stress & Strain" 6th edition, by W.C. Young

7. "Machine Design", by A. Hall, A. Holowenko, H. Laughlin, 1961

Contents

Sections	Page
1. Background Brief Introduction	2
2. Design Criteria, Material Properties and the Allowable Stresses	3
3. Define the boundary condition (BC), set up the loading case to simulate the task of the Telescope Simulator Rotator	
3.1, Manual mathematical calculation method	4
3.2, Finite Element Analysis (FEA) method	10
4. The Calculation and discussion of the fastener group of the connector	18
5. Discussions for some critical components	
5.1, Bearing mounting bracket	22
5.2, Inner race joint bracket	24
5.3, The flange shaft	27
5.3.1, Materials of the flange shaft	28
5.3.2, Define the boundary condition	29
5.3.3, Weld calculations	29
5.3.4, Shaft design	30
5.3.5, Fastener design	32
6. Conclusions	37
7. References	40
8. Contents	41