Fermilab

Particle Physics Division
Mechanical Department Engineering Note

Number: MD-ENG-256 Date: 16 JULY 2010

Project Internal Reference:

Project:

Title: 12" CLASS 600 FLANGE LIFTING BRACKET

Author(s): K. BECZKIEWICZ

Reviewer(s): Erik Voirol

Key Words: FLANGE, LIFTING BRACKET

Abstract Summary: This engineering note shows the resultant stresses on a bracket used to lift a 12" Class 600 flange and fixture associated with it.

Applicable Codes: ASME/ANSI B16.5, ASME B30.20

In order to lift a flange and the fixture it is attached to, a bracket is attached to the flange through the use of bolt holes spaced around the flange. The bracket (Fig. 1) is constructed from a 6” long piece of 3 x 3 x ¼” angle of A36 material. Two holes are evenly spaced from the center of the length of the horizontal leg in order to accommodate for the bolts of the flange. A separate hole is centered on the other leg in order for the bracket and flange to be lifted.

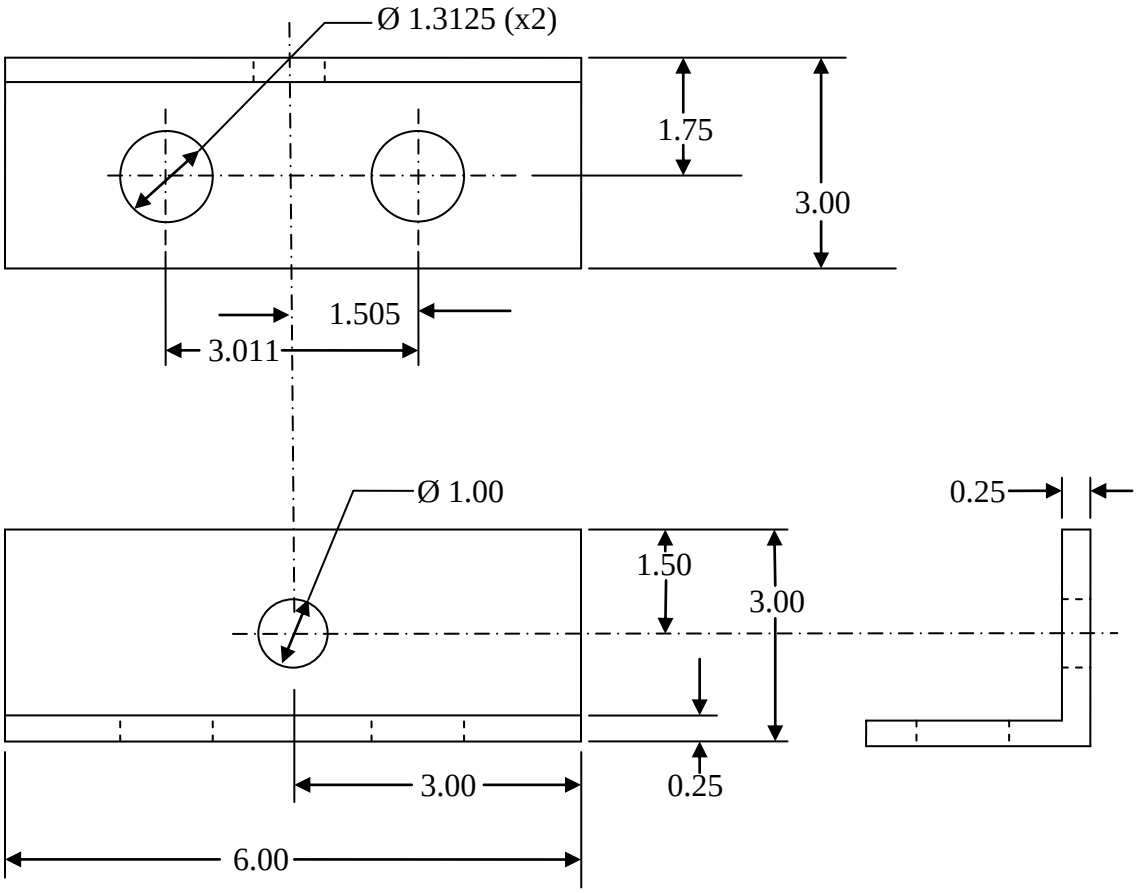

Figure 1: Lifting Bracket

The entire weight of the flange and fixture is 3100 pounds, which is to be lifted through the use of two brackets on opposite sides of the flange. The yield strength of the material is 36 ksi. Although the bracket is not a “below the hook lifting device,” the criteria established in ASME B30.20 will be used as a reference for maximum allowable stresses. Based on these criteria, the allowable stress is less than or equal to one-third of the yield strength of the material, or 12 ksi. Hand calculations of tensile and shear stresses acting on the lifting eye hole are provided in the additional pages at the end of this note.

In order to model the reaction of the bracket and determine the stresses, the I-DEAS modeling and finite element analysis program was used. Once the bracket was modeled, forces and constraints were placed on the bracket (Fig. 2). The total weight of the flange and associated fixture is assumed to be evenly distributed between two

brackets on opposite sides of the flange. The weight of the entire assembly is 3100 lbs., so the total weight to be lifted by one bracket is 1550 pounds. A ¼" annular area was placed around each of the two holes on the horizontal leg in order to simulate the head of the bolt. Boundary constraints were then placed on these annular areas, limiting translation in all three directions and rotation about all three axes.

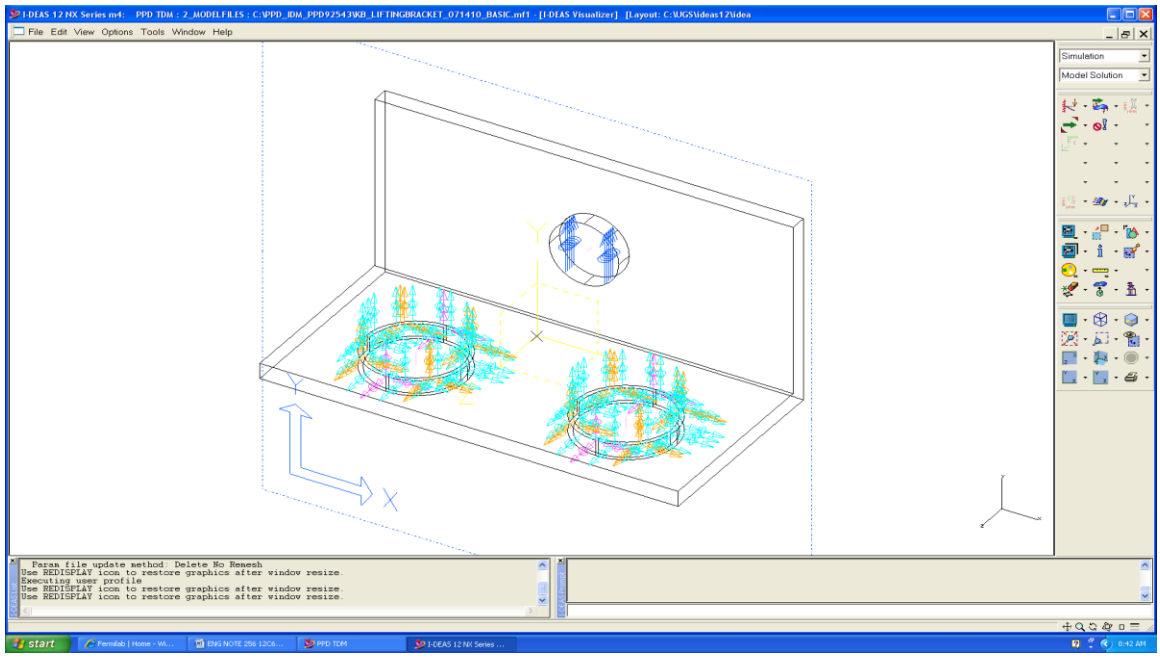

Figure 2: Constraints

A solid mesh was assigned after the forces and constraints were applied to the model. Using several meshes of varying sizes, a trend emerged in the maximum stress values present in the lifting bracket. The maximum stress values were within a range of about 60 to 70 ksi, well above the acceptable maximum of 12 ksi.

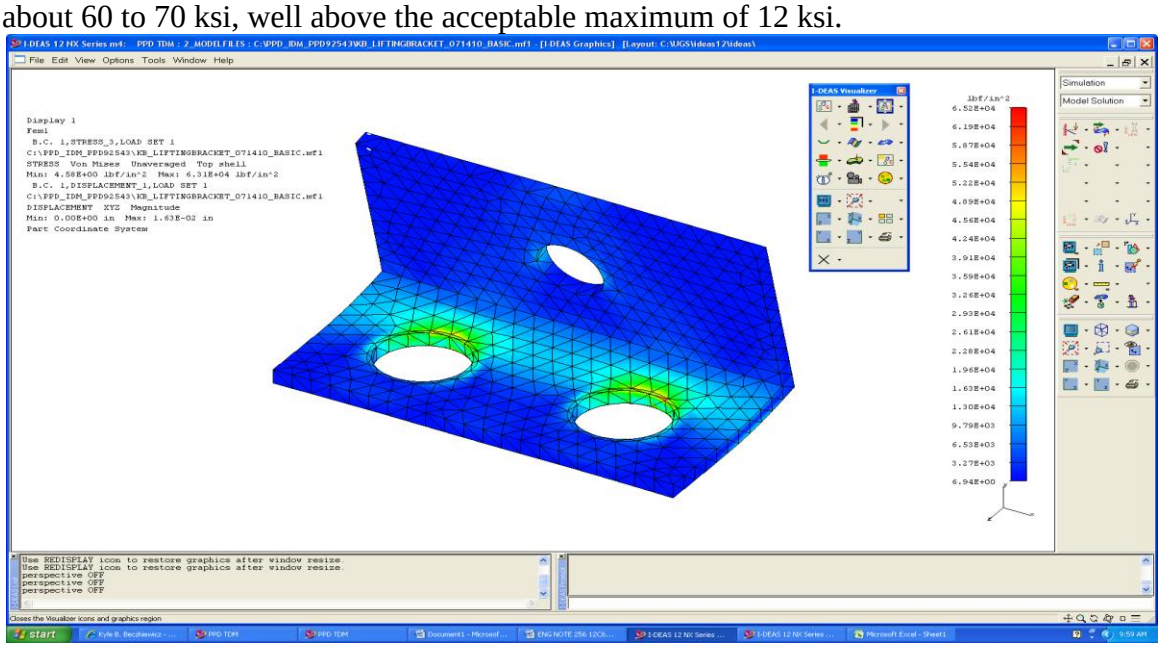

Figure 3: FEA results

The edge of the partition, which represents the area constrained by the bolt head, is where the highest stresses occur. This is due in part to the geometry of the partition as well as the thickness of the angle piece. In order to take into account the localization of these high stresses, a very basic method of stress averaging was utilized. Looking at points approximately 1 and 2 times the thickness of the bracket (1 thickness is about the size of one element on the model); the maximum stresses at those points are estimated. It can be estimated that the maximum stress at a distance of one times the thickness of the bracket is about 20 ksi, which is outside the allowable range. At a value of two times the thickness away from the point of maximum stress, the stresses fall within a range of about 10 to 12 ksi, which is within the bounds of the allowable stress values.

Methods of Stress Reduction

Several methods of stress reduction were investigated. These methods include the addition of webbing at the ends of the bracket, increasing the thickness of the angle piece and increasing the area of the partition, which would simulate the addition of a washer between the bolt and the bracket.

The addition of webbing at the ends of the bracket is a means of increasing the rigidity of the bracket. It provides more support at the ends and would help to prevent some of the bending of the vertical and horizontal legs. In a separate simulation, the addition of webbing with a constant angle thickness of ¼”, the maximum stress was decreased from 63.1 ksi to 45.4 ksi, a difference of about 28%.

Another method of reducing the maximum stress is to increase the thickness of the angle piece. This provides a greater volume for the dissipation of stresses across the bracket. By increasing the thickness from ¼” to 3/8”, the maximum stress in one simulation went from 63.1 ksi to 40.8 ksi, a decrease of the maximum stress value by about 35%.

By combining the two previous methods of webbing addition and an increase of thickness of the angle by 1/8”, the maximum stress was cut from 63.1 ksi down to 29.2 ksi, a decrease of over 50%.

The third method of decreasing the maximum stress in the angle piece is by increasing the size of the partition. Increasing the diameter would have the same effect as adding a washer between the bolt and the bracket. It spreads out the application of the force and also helps to cut down on some of the bending that is allowed by the smaller partition.

By combining an increase in thickness, an increase in partition diameter and adding webbing to the ends of the angle piece, it is possible to cut the maximum stress down to within the acceptable stress range.

TENSILE / SHEAR STRESS CALCULATIONS

$$\sigma = \frac{F}{A}$$

$$\tau = \frac{F}{A}$$

TENSILE STRESS

$$F = \frac{3100 \text{ lbs}}{2} = 1550 \text{ lbs}$$

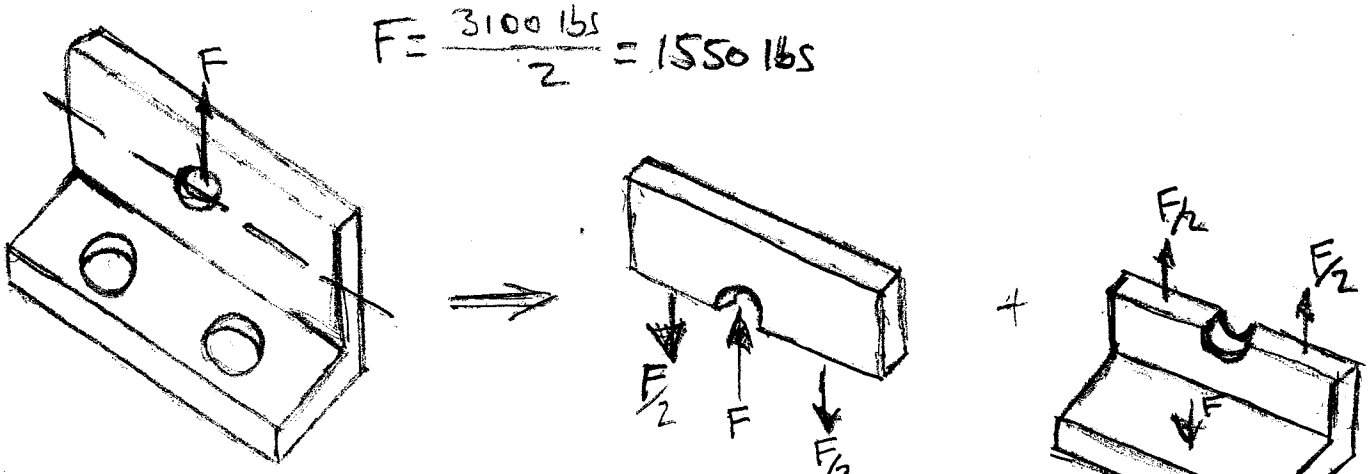

$$\sigma = \frac{F}{A}$$

$$A = 0.25(6-1)$$

$$= 1.25 \text{ in.}^2$$

$$\sigma = \frac{1550 \text{ lbs}}{1.25 \text{ in}^2} = 1{,}240 \text{ psi} = \boxed{1.24 \text{ ksi}}$$

SHEAR STRESS

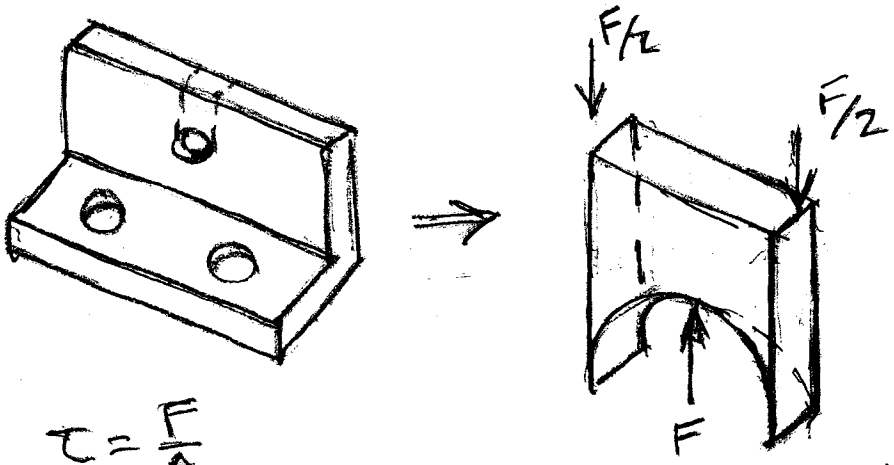

$$\tau = \frac{F}{A}$$

$$F = \frac{3100}{2} = 1550 \text{ lbs}$$

$$A = 2(0.25)(1.5) = 0.75 \text{ in}^2$$

$$\tau = \frac{1550 \text{ lbs}}{0.75 \text{ in}^2}$$

$$\boxed{\tau = 2.067 \text{ ksi}}$$

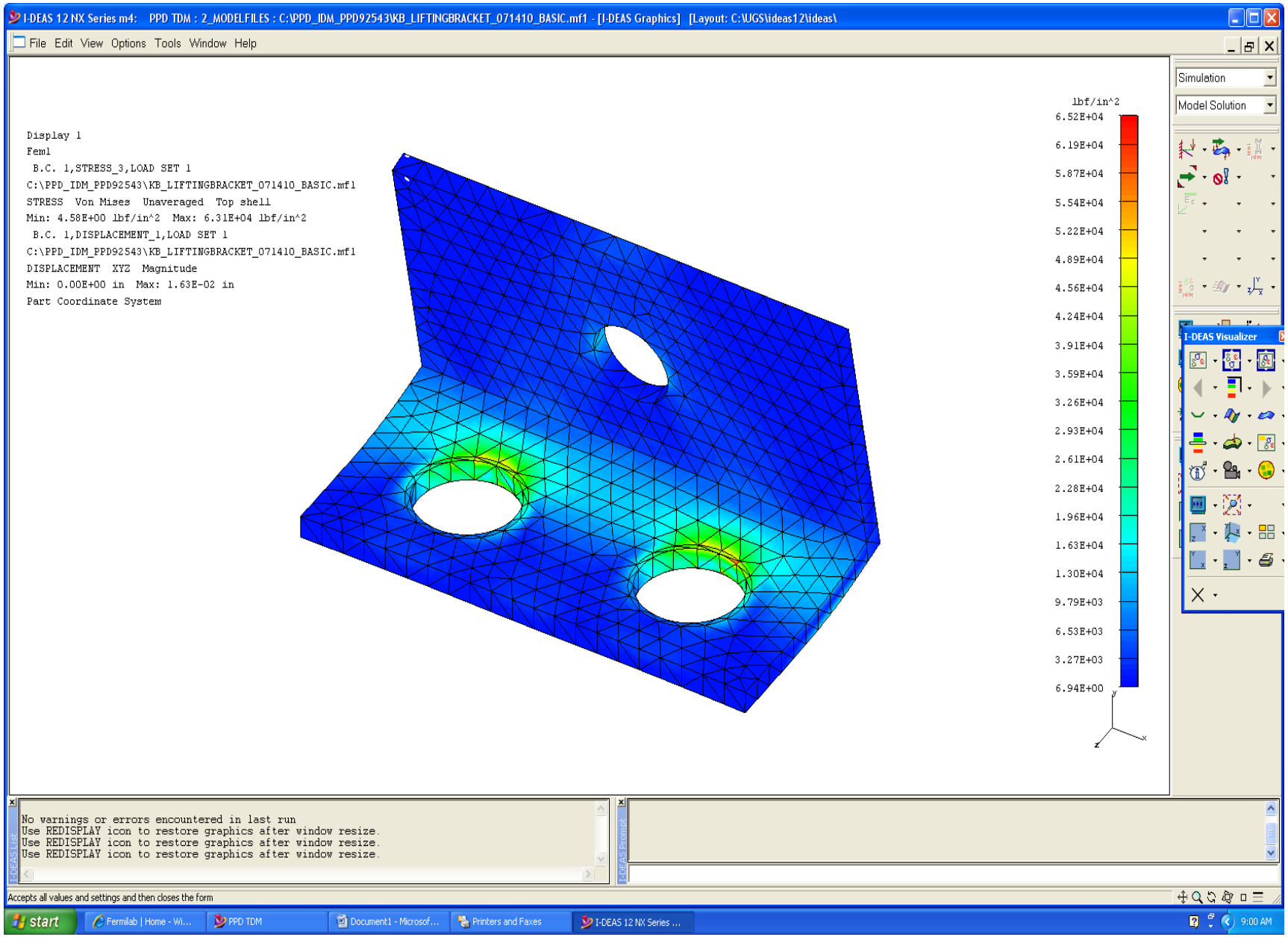
I-DEAS 12 NX Series m4: PPD TDM : 2_MODELFILES : C:\PPD_IDM_PPD92543\KB_LIFTINGBRACKET_071410_BASIC.mf1 - [I-DEAS Graphics] [Layout: C:\UGS\ideas12\ideas\
File Edit View Options Tools Window Help
Display 1
Feml
B.C. 1,STRESS_3,LOAD SET 1
C:\PPD_IDM_PPD92543\KB_LIFTINGBRACKET_071410_BASIC.mf1
STRESS Von Mises Unaveraged Top shell
Min: 4.58E+00 lbf/in^2 Max: 6.31E+04 lbf/in^2
B.C. 1,DISPLACEMENT_1,LOAD SET 1
C:\PPD_IDM_PPD92543\KB_LIFTINGBRACKET_071410_BASIC.mf1
DISPLACEMENT XYZ Magnitude
Min: 0.00E+00 in Max: 1.63E-02 in
Part Coordinate System
lbf/in^2
6.52E+04
6.19E+04
5.87E+04
5.54E+04
5.22E+04
4.89E+04
4.56E+04
4.24E+04
3.91E+04
3.59E+04
3.26E+04
2.93E+04
2.61E+04
2.28E+04
1.96E+04
1.63E+04
1.30E+04
9.79E+03
6.53E+03
3.27E+03
6.94E+00
Simulation
Model Solution
I-DEAS Visualizer
No warnings or errors encountered in last run
Use REDISPLAY icon to restore graphics after window resize.
Use REDISPLAY icon to restore graphics after window resize.
Use REDISPLAY icon to restore graphics after window resize.
Accepts all values and settings and then closes the form
start
Fermilab | Home - Wi...
PPD TDM
Document1 - Microsof...
Printers and Faxes
I-DEAS 12 NX Series ...
9:00 AM