Fermilab

Revision 1.0

1/21/1999

Particle Physics Division

Engineering and Technical Teams

Mechanical Support Engineering Note

Number: MD-ENG-087 Date:July 7, 2005

Project: Minos Project Internal Reference:

Title: Seismic calculation for Minos near detector demonstration model in MSB

Author(s): J. Kilmer

Reviewer(s): D. Pal 7/7/05

Key Words:

Abstract/Summary:
This calculation demonstrates that the support stand does not need braces to withstand local seismic loads.

Applicable Codes:

FERMILAB ENGINEERING NOTE	SECTION	PROJECT	SERIAL-CATEGORY	PAGE
				1

SUBJECT	NAME	
TIPPING FORCE ON NEAR DETECTOR DISPLAY	DATE	REVISION DATE 7/5/05

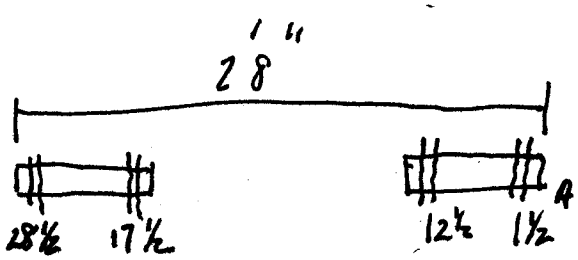

CARBON STEEL 1/2" HDI ANCHORS IN 4000 PSI CONCRETE
⇒ 1690 lb TENSION ALLOWABLE MAXIMUM
(FROM HILTI DESIGN GUIDELINES)

THESE ARE MEASUREMENTS OF THE TWO SIDE COLUMNS ON EACH SIDE.

FOR OVERTURNING RESISTANCE ON EARTHQUAKE LOADING ASSUME THAT THE STRUCTURE TRIES TO ROCK OVER ON CORNER A. THEN RESISTANCE TO OVER TURNING IS PROVIDED BY TENSION IN BOLTS & ANCHORS.

$$\Rightarrow M = 4[1690\,\text{lbs}][1\tfrac{1}{2}'' + 12\tfrac{1}{2}'' + 17\tfrac{1}{2}'' + 28\tfrac{1}{2}'']$$

$$= 405{,}600\ \text{lb-in}$$ MAXIMUM ALLOWED MOMENT.

FOR SEISMIC LOAD ASSUME 6% OF WEIGHT ACTING AT THE CENTER OF MASS OF THE PLANE.

A PLANE WEIGHS 7600 lbs

FRAMING + BOOKENDS ARE MADE OF W8X48 I BEAM.

$$\text{BOOKEND TOTAL HTL} = \frac{2\times(70 + 2\times 36 + 107 + 2\times 34)}{12\ \text{in/ft}} = 52.83\,\text{ft}$$

$$\text{wt} = (52.83\,\text{ft})(48\ \text{lb/ft}) = 2536\ \text{lbs}$$

$$\text{TOTAL wt} = 7600\ \text{lbs} + 2536\ \text{lbs} = 10{,}136\ \text{lbs}$$

TOTAL MOMENT IS THEN $M = F\ell$

$$= (.06)(10{,}136\ \text{lbs})(102\ \text{in})$$

$$= 62{,}032\ \text{lb-in} \ll 405{,}600\ \text{lb-in}$$

∴ THE ANCHORS ARE SUFFICIENT TO KEEP THE FRAME FROM TOPPLING IN A LIKELY EARTHQUAKE.

REV.	DESCRIPTION	DRAWN	DATE
		APPROVED	DATE

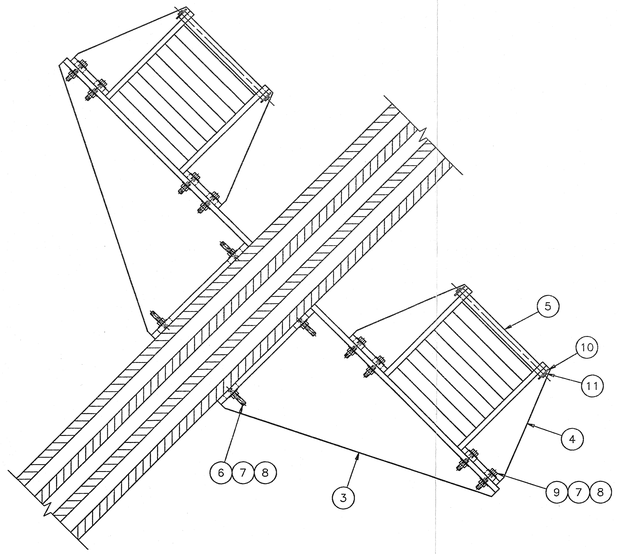

SECTION A-A

SCALE: 3/16

2-PLACES

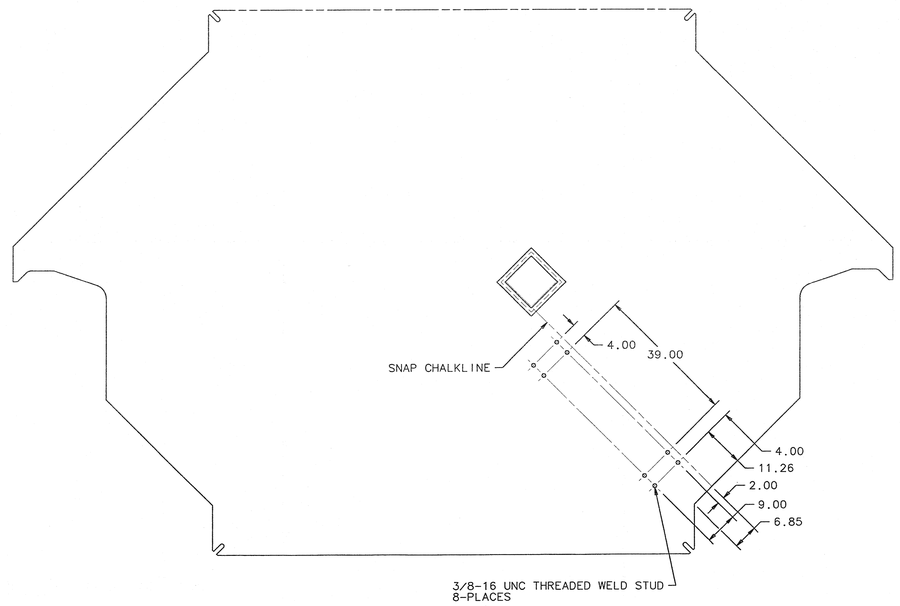

WELD STUD LOCATIONS

TYPICAL FRONT AND BACK PLATES

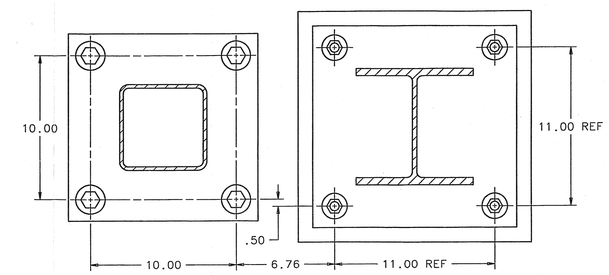

SECTION B-B

SCALE: 1/4

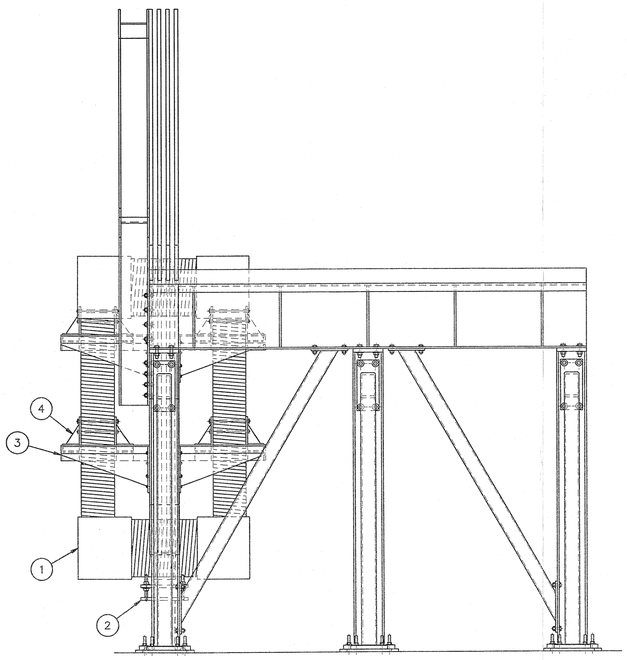

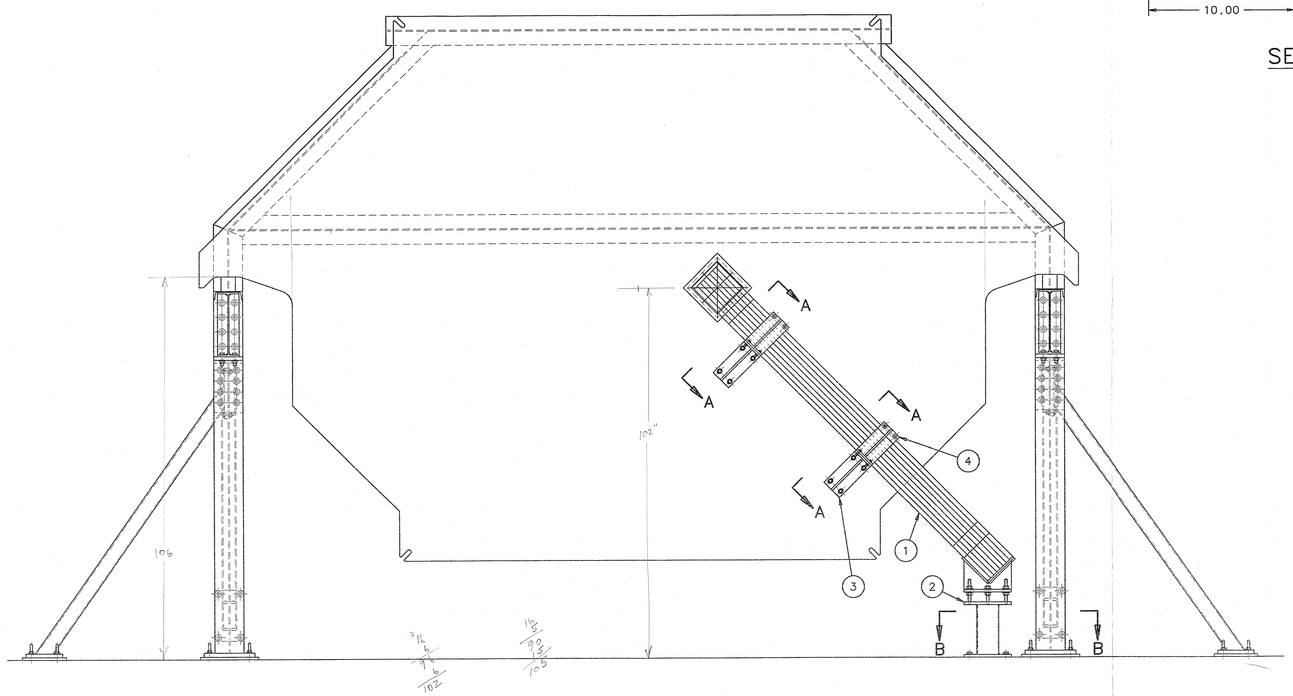

ITEM NO.	PART NO.	DESCRIPTION OR SIZE	QTY. REQ.
11	COML.	HHCS, 1/4-20 x 1/2 LG., S.S. 304	16
10	COML.	FENDER WASHER, 9/32 I.D. x 1 1/4 O.D., S.S. 304	16
9	COML.	HHCS, 3/8-16 x 2 LG., S.S. 304	32
8	COML.	STD. HEX NUT, 3/8-16 UNC, S.S. 304	48
7	COML.	FLAT WASHER, 3/8 NOM., S.S. 304	48
6	COML.	WELD STUD, 3/8-16 UNC x 2 LG., CARBON STEEL	16
5	MB-397223	RESTRAINT BAR	8
4	MC-397180	MAGNET COIL RESTRAINT WELDMENT	8
3	MC-397179	MAGNET COIL SUPPORT WELDMENT	4
2	MC-397175	SUPPORT STAND ASSY.	1
1	MD-384955	TEST MAGNET COIL & INSULATOR ASSY.	1

PARTS LIST

UNLESS OTHERWISE SPECIFIED			ORIGINATOR	J. KILMER	10-05-00
.XX	.XXX	ANGLES	DRAWN	B. CYKO	10-05-00
±.06	± —	± —	CHECKED		10-10-00
			APPROVED		10/10/00
			USED ON		
			MATERIAL	SEE ABOVE PARTS LIST	

1. BREAK ALL SHARP EDGES .015 MAX.
2. DO NOT SCALE DRWG.
3. DIMENSIONING IN ACCORD WITH ANSI Y14.5M-1982 STD.
4. ALL DIMENSIONS ARE IN INCHES.

√ MAX. ALL MACHINED SURFACES

FERMI NATIONAL ACCELERATOR LABORATORY
UNITED STATES DEPARTMENT OF ENERGY

PPD/MECHANICAL SUPPORT
MINOS/NEAR PLANE HANGING SUPPORT
NEAR MAGNET TEST COIL ASSEMBLY

SCALE	DRAWING NUMBER	SHEET NO.	REV.
1/16 & AS NOTED	9213.300-ME-397177	1 OF 1	

NOTES: