Fermilab

Particle Physics Division

Mechanical Department Engineering Note

Number: MD-ENG- 281 Date: October 6, 2010

Project: Quiet Experiment

Project Internal Reference:

Title: Quiet safety documents

Author(s): Hogan Nguyen, Ang Lee

Reviewer(s): James R. Kilmer

Key Words: Quiet

Abstract/Summary:
This document contains the following for the Quiet experiment:
Safety Summary Document
The Structural Analysis for an Aluminum Vacuum window Used in Quiet experiment
Quiet Black Body Cryostat Operating Procedure
Quiet Black Body Vacuum vessel Hazard Analysis

Applicable Codes:

Various FESHM chapters

QUIET Cold Black Body Cryostat

SAFETY SUMMARY DOCUMENT

Hogan Nguyen, PPD, Fermilab
October 4th, 2010

1. Purpose

This is a vacuum vessel containing an epoxy, called Eccosorb CR-112, attached to a cold head of a cryocooler. The Eccosorb is cooled to 20K-40K, and its thermal radiation (mainly microwaves) is used to study microwave detectors used for CMB polarization research.

The device would be operated at the PPD Lab 3 high bay over the next several years (2010-2012).

2. Layout and Summary Table

The layout and flow diagram are shown in figure 1 and 2 respectively.

The vacuum vessel consists of an "Upper Vessel" and a "Lower Vessel" section. These two sections joined together by an O-ring seal, and held together by a clamping system.

The vacuum volume measures approximately 18" diameter and 17" in length. The volume is approximately 2.5 CF. Being less than 35 CF, this excludes the setup from requirements of FESHM 5033.

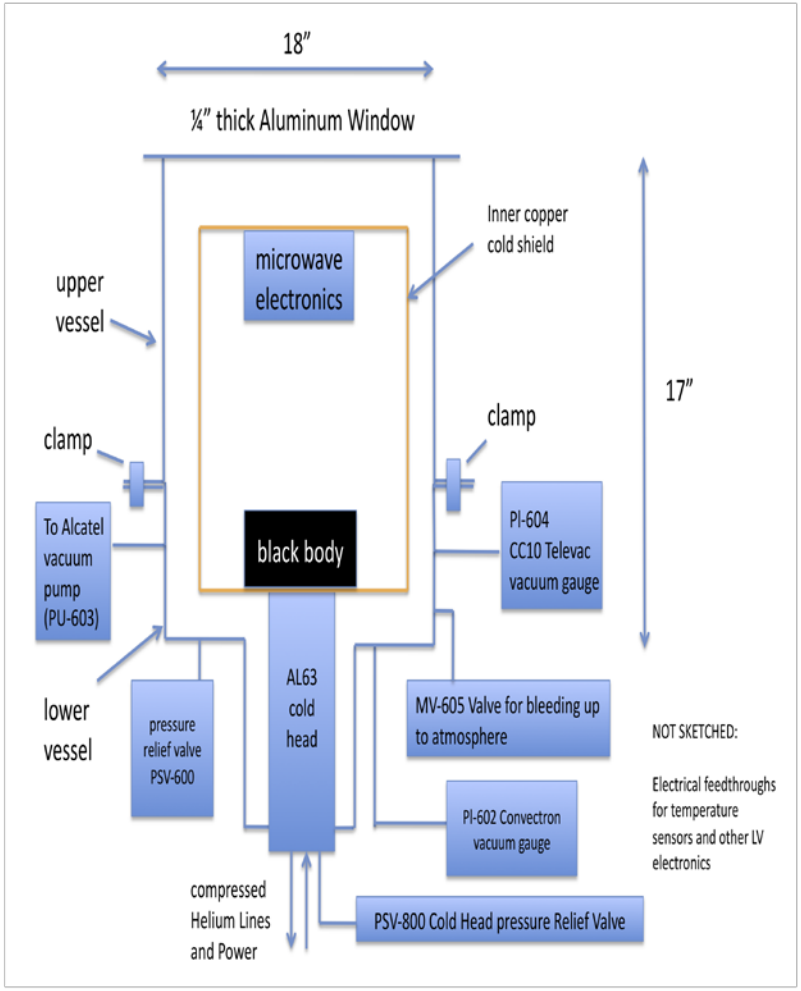

Figure 1

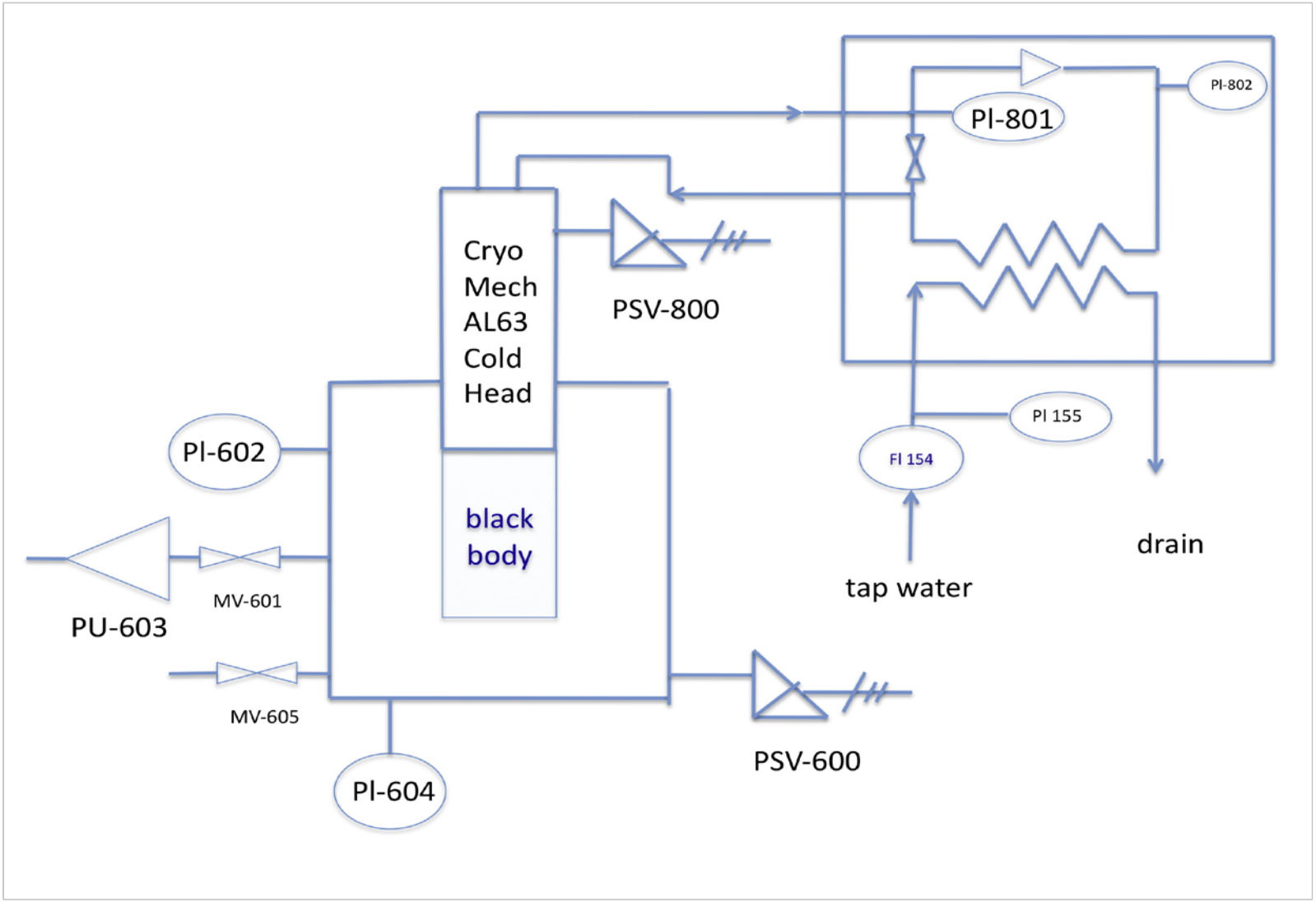

Figure 2: Flow Diagram

Table 1 below summarizes the active components in the system

Black Body Cryostat Component List

Tag Number	Fluid	Description	Manufacturer	Model Number	Rating
Fl-154	Water	Water flow rate to Helium Compressor	Dwyer	RMC	0 to 2.2 gpm
Pl-155	Water	Water supply pressure to helium compressor	none	none	0 to 30 psig
PSV-600	vacuum	Vacuum space relief valve	CVI	V-1044	relieves about 4 psi
MV-601	vacuum	Vacuum pump isolation valve	Leybold Hareaus	288-02-B1	30 psig
Pl-602	vacuum	Vacuum pressure convectron gauge	Granville Phillips	275	1 mTorr- 760 Torr
PU-603	vacuum	Turbomolecular and dry vacuum pump system	Adixen	Drytel 1025, ATH31 & AMD1	10E-8 Torr, 30 l/sec
Pl-604	vacuum	Vacuum gauge	Televac	CC10	10e-9 - 760 Torr
MV-605	vacuum	valve to assist in bringing vessel to atm pressure	Swage-lok	B-4HK2	500 psig
PSV-800	Helium	Cold head pressure relief valve	Generant	VRVH-4SAEB-B-425	425 psig
Pl-801	Helium	Helium compressure suction pressure	Ashcroft	none	0-400 psig
Pl-802	Helium	Helium compressure discharge pressure	Ashcroft	none	0-400 psig
none	Helium	Helium Compressor for cold head	Cryomech	CP830	280 psig
none	Helium	Cryocooler cold head	Cryomech	AL63	17watts @30K

Table 1

3. Vacuum Window

The vacuum window is made from ¼” thick T6061-T6 Aluminum. See accompanying document[1]. The maximum stress present on the window is 11.2 kpsi. The ultimate and yield strength of T6 Aluminum is 42 kpsi and 35 kpsi respectively. Therefore, using 35 kpsi, this is a 3.1x safety margin. Fermilab TM-1380 requires a factor of 2x safety margin.

The calculated deflection is 0.1”. According to TM-1380, this window does NOT qualify as a “thin” window, since its deflection is less than ½ of its thickness.

4. Lifting Fixture

For access to work on the black body, two commercial lifting hooks are used to lift the upper vessel. Each lifting hook is rated at 2500 lbs. The weight of the upper vessel is about 200 lbs.

The slings make a 30 degree angle relative to vertical. The tensile force on the sling is approximately (100 lbs)/sin(60 deg) = 115 lbs. This is significantly less than the 2500 lbs rating of the hook.

[1] **The Structural Analysis for an Aluminum Vacuum Window used in "QUIET" Experiment, Ang Lee, Sept 16th, 2009.**

5. ODH Analysis

The AL63 crycooler does not pose any significant ODH risk. The Cryomech AL63 manual does not list sudden helium loss to be a hazard. The amount of helium contained in the cryocooler is 0.32 CF at atmospheric pressure and temperature

The following is an estimate assuming the loss of 0.32 CF of helium into the highbay of Lab 3. The Lab 3 highbay volume is approximately 70’ long x 40’ wide x 16’ height = 44800 CF. This is about 50% of the total air volume of Lab 3.

The nominal Oxygen concentration is 20.9%. The reduced Oxygen concentration is:

20.9% * (1 – 0.32/44800) = 20.89985%

This exceeds the 19.5% standard for oxygen deficiency, as indicated in FESHM 5064.

6. Cryomech AL63 Cryocooler

Electrical	AC208 Single Phase
Type	Gifford-McMahon
Heat Output	3KW
Maximum Input Water Temperature	28C
Helium Input Pressure	270 Psi
Helium Return Pressure	50 Psi
Temperature of Helium gas in the gas lines outside of cooler head	70F < T < 120F
Cooling Power at 20 Kelvin	5 Watt
Minimum Temperature	16 Kelvin
Helium Volume	0.32 CF at atmospheric pressure and room temperature
High Pressure Helium Lines	The lines are part of the commercial unit sold with the Cryomech AL63. The lines are fabricated by Integra,Inc. using materials made by Penflex. 1” nominal diameter. Single braided 304SS. Burst Load at 1100 PSI. This data was provided by Cryomech

Table 2

7. Failure Mode Effects Analysis

The system does not present any high level of hazards to personnel or equipment in case of failure.

Failure Scenario	Effect
Sudden loss of Helium from the cold-head, released into the vacuum tank	No significant effect is expected. Tank is protected from overpressure by the CVI V-1044 valve. The amount of helium stored is only 0.32 CF at STP. This amount is not enough to even bring the vessel to atmospheric pressure.
Failure of the vacuum window to sustain vacuum.	No significant effect is expected. Condensation could occur on the black body. But this has no effect on its performance. When the cryocooler is turned off, the condensation will vaporize, and the pressure is relieved by the CVI valve.
Loss of Power to the AL63 Cryocooler.	No significant safety effect is expected. The blackbody temperature will rise slowly.
Loss of Power to the Alcatel Drytel vacuum pump, or gate valve is accidentally closed during pump down.	No significant safety effect. The vacuum pressure will be maintained, as the cryocooler will maintain the low pressure due to cryopumping. Condensation will occur on the black body, cold-head, and inner shield. When the cryocooler is turned off, the condensation will vaporize, and the pressure is relieved by the CVI valve.
Water flow to Cryocompressor differs from nominal setting of 0.5 Gal/min	No significant effect. If flow is > 0.5 gal/min, cryocooler works the same as before. If flow < 0.5 gal/min, there is loss of cooling power, but this has no safety concern.

The Structural Analysis for an Aluminum Vacuum Window used in "Quite" Experiment

Ang Lee

Sept 16, 2009

A vacuum window, D=18”, is made of the aluminum T6061-T6 . The thickness of 0.25" is given by H. Nguyen. Based on the “Specifications for Aluminum Structure” by the Aluminum association, the A6061-T6 (the plate) has a ultimate strength (Fu) of 42 ksi and 35 ksi for the yield strength (Fy) respectively. Fermilab TM-1380 requires the working stress should be satisfied the most stringent of the following:

S (working) < S (allowable)=0.5*Fu=21 ksi

Or

S (working) < S (allowable) =0.9 *Fy =31.5 ksi

Therefore, we’ve used the allowable stress=21 ksi here. The calculation indicates that 0.25” thick (aluminum T6061-T6) is sufficient for a given loading.

Table 1 Calculation Result

Aluminum T6061-T6(t=0.25”,D-18”)	Stress at the center	Stress at the edge	Window deflection
Allowable=21 ksi	9.9 ksi	11.2 ksi	0.1”

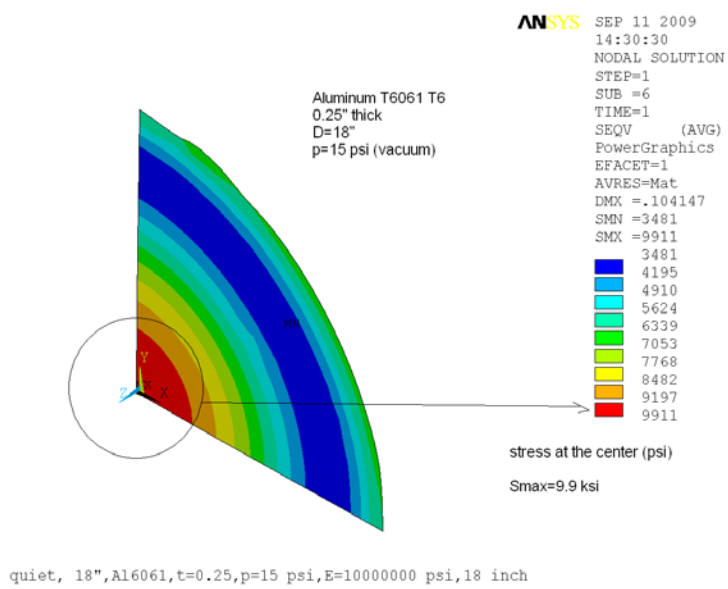

Fig 1 The center stress

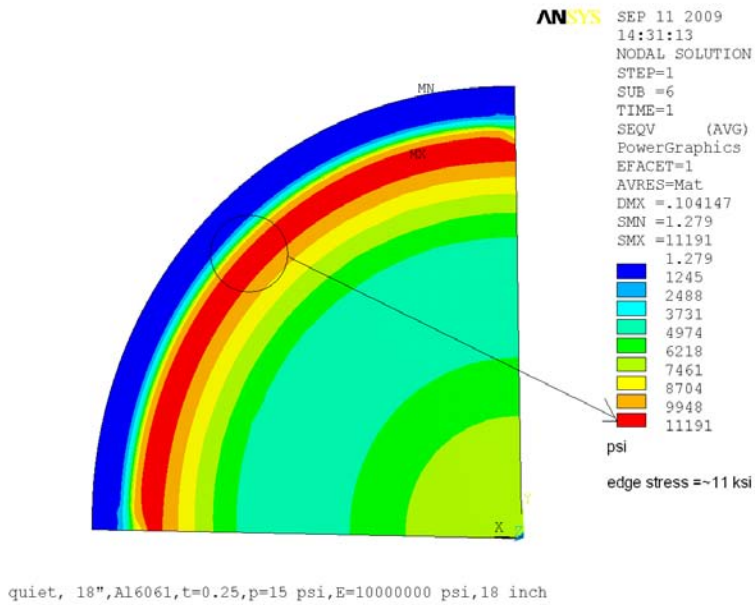

Fig 2 The edge stress

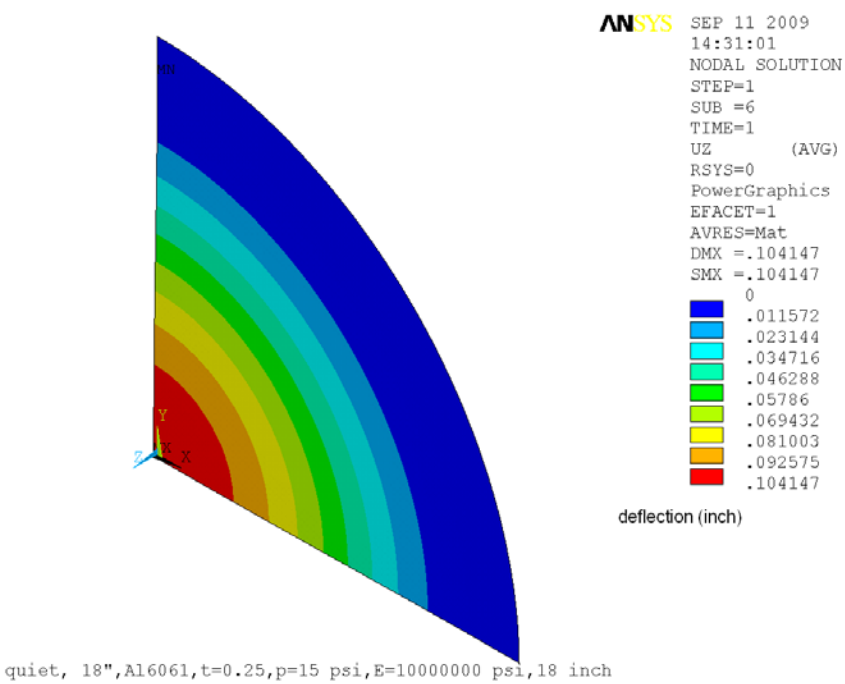

Fig 3 Window deflection

QUIET Black Body Cryostat Operating Procedure

Hogan Nguyen
Fermilab, PPD
October 5th, 2010

1. Personnel should read the QUIET Safety Summary Document and familiarize themselves with the setup.

2. With the vessel fully closed, and the gate valve open, turn on the Alcatel Drytel vacuum pump.

3. Wait until the pressure gauge Pl-604 reads < 20 mTorr. The pump down procedure from atmospheric pressure should take about 3 hours. Otherwise there are leaks. Contact expert from the list below.

4. Make sure that water lines are connected to the AL63 compressor. The input line should be connected to a tap water source. The output line should be connected to drain. Turn on the tap water and make sure the water flow into the AL63 Cryocooler is set to 0.5 gal/min.

5. Turn on the AL63 cryocooler. Make sure that the helium pressure output and return gauges read about 270 psi and 50 psi respectively.

6. The temperature of the black body is displayed on the Lakeshore controller unit.

7. If desired, log on the PPD88108.fnal.gov windows computer and run the Labview temperature logging software. Contact Jorge Montes for details.

8. For any questions, or if the observed machine parameters do not agree with this document, contact the experts below.

Expert List

Dave Butler	1-630-840-3370	dbutler@fnal.gov
Hogan Nguyen	1-630-840-8193	hogann@fnal.gov
Jorge Montes	1-630-840-8630	jorgm@fnal.gov

QUIET BLACK BODY VACUUM VESSEL

HAZARD ANALYSIS

October 5th, 2010

Hogan Nguyen

Description of Work and Hazards

A small test stand is used in Lab 3 to cool a Black Body, made of Eccosorb CR-112 (an epoxy). The test stand is an 18" diameter and 17" long vacuum chamber.

The Black Body is stored inside the vacuum chamber. It is cooled to between 20K-70K using a commercial AL63 Cryomech cryocooler. The Black Body is casted into an array of pyramids, and weighs approximately 25 lbs. See picture below (for simplicity, the inner copper shield surrounding the black body is not shown).

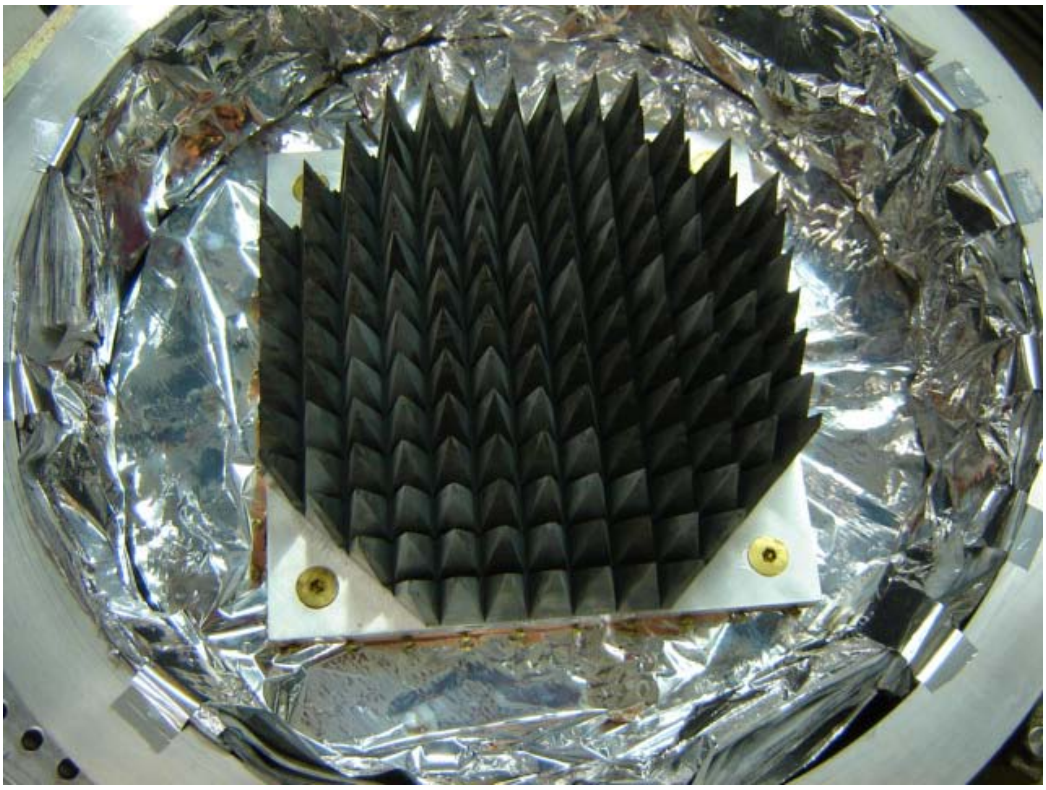

There are additional low voltage and low power electronics (<<1 Watt) to monitor the Black Body temperature, and to study the microwave radiation emanating from the Black Body. Since this is low power and low voltage, there are no significant electronics hazards.

During normal operation, the work involves operating the vacuum pump and the cryocooler. The personnel would be required to operate a data-acquisition system. There are no significant hazards associated during this operation.

During maintenance or upgrade operations, the vessel needs to be opened. There are several minor hazards. The chamber is not to be opened unless the temperature has returned to near room temperature (and the vessel is at atmospheric pressure).

Opening the vessel requires a trained fork truck and crain operator. Slings, wrapped around the tines of the fork truck, are used to lift the vessel. Crane training is required. The person should also check the rigging's rating. A person could suffer an injury by pulling hard on the bolts at the flange. Proper tools for the task and proper body mechanics are required.

There are 4 thermometers to monitor the Black Body temperature. In the event that all the thermometers fail, the personnel could be in contact with a cold object. To prevent this, the personnel should look for signs of frost or condensation on the Black Body or on the inner copper shield, which would indicate a cold temperature.

The pyramids are casted into sharp points at the tip. Therefore, they are a mechanical hazard as they are sharp points. When working with one's hands near the pyramid tips, a light sheet of foam should be used to cover the tips. Tweezers or tongs should be used when reaching for items that have accidentally fallen into the Black Body.

HAZARDS

Step/Phase of Job	Safety Hazard	Precautions/Safety Procedures
1) Potential for working with objects at cold temperatures.	**The vessel is not to be opened until the temperature reaches near room temperature.** **However, in the event of temperature sensor failure, the objects inside the cryostat could be at cold temperatures.** **Persons exposed to cold temperatures may experience frostbite or loss of extremities.**	**Watch for indication of frost or condensation on inner copper vessel or on the Black Body.** **Wear appropriate protective clothing per FESHM/5000/5101**
2) Opening the Vessel	**The spool piece of the vessel is an object weighing approximately 200 lbs. The Eccosorb and other items inside the vessel represent significant investment of time and money.**	**Personnel must be trained to operate a crane and fork truck. The rigging rating is to be checked.** **Proper tools are required to loosen or tighten the flange bolts.** **Proper back-works practice is required, as described in the training** FN000335/CR/01.
3) working near black body	**The tips of the black body are sharp. Working with hands near the sharp tips can cause cuts.**	**When working with hands near the Black Body, put a sheet of foam over the pyramid tips. Alternately, worker can use gloves.** **If items fall into the array of pyramids, tweezers or tongs should be used to retrieve the dropped item.**

Approvals:

PPD ES&H _____

Accepted: _____ **Date:** _____

Supervisor/Task Manager

My supervisor has reviewed this hazard analysis with me and I understand the hazards and required precautionary actions. I will follow the requirements of this hazard analysis or notify my supervisor if I am unable to do so.

Name (please print)	Signature	Date

2060TA-1

Rev. 07/2004