REV	DESCRIPTION	DRAWN	DATE
		APPROVED	DATE

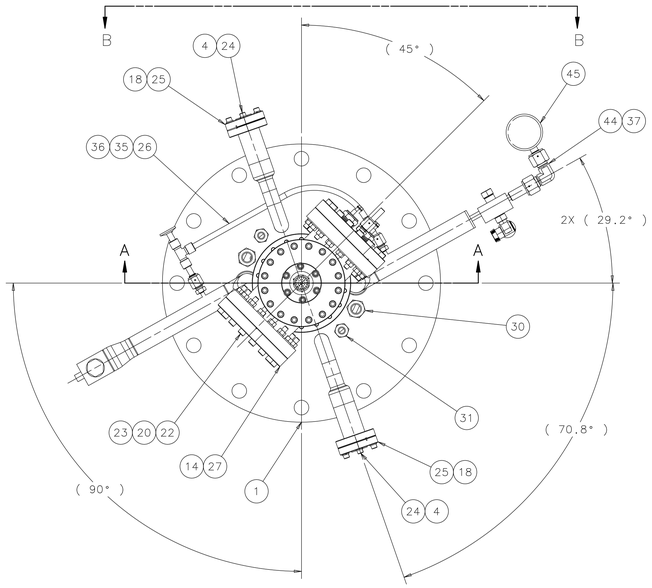

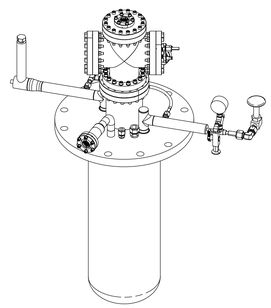

ISOMETRIC VIEW
SCALE= 1:8

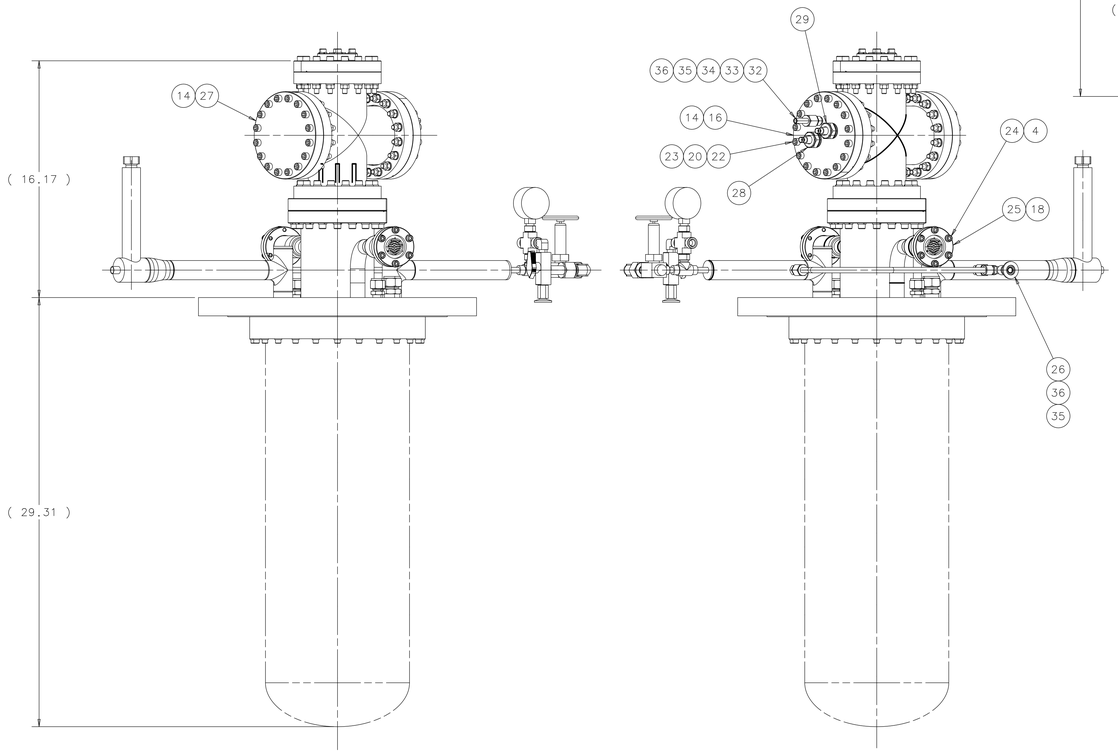

VIEW B-B

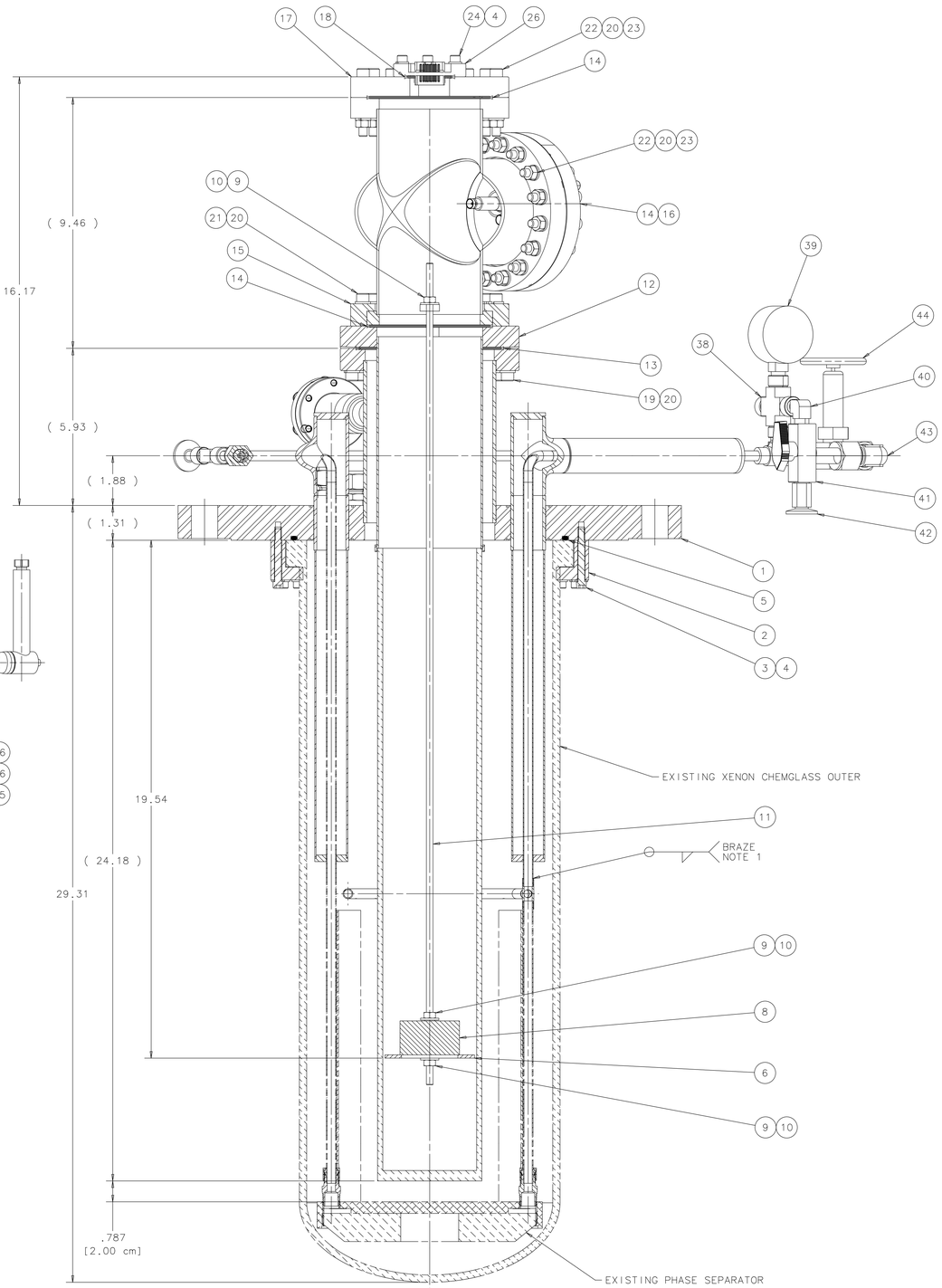

SECTION A-A
SCALE= 1:2

ITEM	PART NO.	DESCRIPTION OR SIZE	QTY.
44	SS-8BG-TW	BELLOWS SEALED VALVE;1/2 TSW X 3/4 TBW; 316 STN. STL.;SWAGELOK CORP.	1
43	SS-8-VCR-9	1/2 VCR UNION ELBOW; 316 STN. STL.;SWAGELOK CORP.	1
42	731021	MW16 FLANGE X 1/4 MNPT; MDC VACUUM PRODUCTS CORP.	1
41	SS-4P4T4	QUARTER-TURN PLUG VALVE;1/4 FNPT; 316 STN. STL.;SWAGELOK CORP.	1
40	935J	90° MALE ELBOW;1/4 MNPT; 316 STN. STL.;CAJON CORP.	1
39	163269	P-500 GAUGE;2-OD DIAL;1/4 MNPT; 0-60 PSI;USG CORP.	1
38	4FX	1/4 FNPT CROSS;BRASS; PARKER-HANNIFAN CORP.	1
37	SS-8-VCR-2-GR	1/2 VCR GASKET ASSEMBLY; SILVER PLATED NICKEL;SWAGELOK CORP.	2
36	SS-4-VCR-2-GR	1/4 VCR RETAINER; SILVER PLATED NICKEL;SWAGELOK CORP.	3
35	SS-4-VCR-2	1/4 VCR GASKET; SILVER PLATED NICKEL;SWAGELOK CORP.	3
34	SS-4-VCR-1	1/4 VCR FEMALE NUT; 316 STN. STL.;SWAGELOK CORP.	1
33	SS-4-VCR-3	1/4 TUBE SOCKET WELD GLAND; 316 STN. STL.;SWAGELOK CORP.	1
32	SS-4-VCR-1-4	1/4 MNPT X 1/4 VCR BODY; 316 STN. STL.;SWAGELOK CORP.	1
31	SS-810-1-6BT	1/2 TUBE X 3/8 MNPT CONNECTOR; 316 STN. STL.;SWAGELOK CORP.	2
30	SS-1210-1-12BT	3/4 TUBE X 3/4 MNPT CONNECTOR; 316 STN.STL.;SWAGELOK CORP.	2
29	IFDMG012035	3/4 MNPT HIGH VOLTAGE DOUBLE-ENDED FEEDTHRU; KURT J. LESKER CORP.	1
28	IFDBG012035	3/4 MNPT DOUBLE-ENDED FEEDTHRU; KURT J. LESKER CORP.	1
27	110026	6-00 BLANK FLANGE; MDC VACUUM PRODUCTS CORP.	1
26	MC-486121	XENON PUMPOUT WELD V2	1
25	18907-01-CF	32 PIN CONFLAT;2-3/4 FLANGE; CERAMASEAL CORP.	3
24	COM'L.	SOCKET HEAD CAP SCREW;1/4-28 UNF X 7/8 LG.; 18-8 STN. STL.	18
23	COM'L.	HEX NUT;5/16-24 UNF; 18-8 STN. STL.	48
22	COM'L.	SOCKET HEAD CAP SCREW;5/16-24 UNF X 2.25 LG.; 18-8 STN. STL.	48
21	COM'L.	SOCKET HEAD CAP SCREW;5/16-24 UNF X 1.25 LG.; 18-8 STN. STL.	16
20	COM'L.	LOCK WASHER; 5/16 SCREW; 18-8 STN. STL.	82
19	COM'L.	SOCKET HEAD CAP SCREW;5/16-24 UNF X 1.50 LG.; 18-8 STN. STL.	18
18	191004	GASKET;OFE COPPER;2-3/4 FLANGE;GK-150; MDC VACUUM PRODUCTS CORP.	3
17	150016	REDUCING FLANGE;6-00 X 2-3/4; MDC VACUUM PRODUCTS CORP.	1
16	MC-486112	5-97 BLNK FLG MDC-110025 MOD	1
15	MC-486120	CROSS WELDMENT	1
14	191013	GASKET;OFE COPPER;6-00 FLANGE;GK-400; MDC VACUUM PRODUCTS CORP.	4
13	191015	GASKET;OFE COPPER;6-3/4 FLANGE;GK-500; MDC VACUUM PRODUCTS CORP.	1
12	MD-486085	XENON GLASS TUBE SUB-ASSY V2	1
11	COM'L.	1/4-20 UNC CONTINUOUS THREADED ROD X 31.00 LG.; G-10;FASTNER COMPONENTS CORP.	3
10	94900A029	HEX NUT;1/4-20 UNC; NYLON 6/6;McMASTER-CARR	9
9	90295A451	WASHER;FLAT;1/4 SCREW; NYLON 6/6;McMASTER-CARR	9
8	R9869	SCINTILLATION LIGHT READOUT; HAMAMATSU CORP.	1
7	COM'L.	SPACER;3/8 O.D. X .26 I.D. X 1.31 LG.; TEFLON	3
6	MB-486116	READOUT POCKET BOTTOM G-10	1
5	9464K641	O-RING;3/16W X 10.00 I.D. X 10-3/8 O.D.; VITON FLUOROELASTOMER;McMASTER-CARR	1
4	COM'L.	LOCK WASHER; 1/4 SCREW; 18-8 STN. STL.	42
3	COM'L.	SOCKET HEAD CAP SCREW;1/4-20 UNC X 2.00 LG.; 18-8 STN. STL.	24
2	MC-486736	FLANGE ADAPTER 12 INCH XENON	1
1	MD-486111	TOP FLANGE WELDMENT V2	1

PARTS LIST

UNLESS OTHERWISE SPECIFIED			ORIGINATOR	H.CEASE	22-JUL-2010
.XX	.XXX	ANGLES	DRAWN	B.ELLISON	22-JUL-2010
± .02	± •••	± •••	CHECKED	H.CEASE	27-JUL-2010
			APPROVED	H.CEASE	27-JUL-2010

1. BREAK ALL SHARP EDGES .015 MAX.
2. DO NOT SCALE DRAWING.
3. DIMENSIONS BASED UPON ASME Y14.5M-1994
4. MAX. ALL MACH. SURFACES 125
5. DRAWING UNITS: U.S. INCH

USED ON: ME-486131

MATERIAL: SEE PARTS LIST ABOVE

NOTES:

1.-"VACUUM TEST...NO LEAK SHALL BE DETECTABLE ON THE MOST SENSITIVE SCALE OF A HELIUM LEAK DETECTOR WITH A MINIMUM SENSITIVITY OF 10^{-9} ATM CC/SEC."
2. STRESS RELIEVE AFTER WELDING.

NOTICE: IMAGE OBTAINED FROM FERMILAB WEB SITE
This information is provided for REFERENCE use only. Not for MANUFACTURE, or DESIGN INFORMATION. All information contained in this document represents work sponsored by an agency of the U.S. Government. Neither the U.S. Government nor any agency thereof, nor Universities Research Association, Inc., nor any of their employees or officers, makes any warranty, express or implied, or assumes any legal liability or responsibility for the accuracy, completeness, or usefulness of any information, apparatus, product or process disclosed, or represents that its use would not infringe privately owned rights.

FERMI NATIONAL ACCELERATOR LABORATORY
UNITED STATES DEPARTMENT OF ENERGY

SOLID XENON VESSEL GAS SYSTEM SOLID XENON TOP FLG ASSY VER2

SCALE	DRAWING NUMBER	SHEET	REV
1:4 & AS NOTED	9214.000-ME-486129	1 OF 1	

CREATED WITH : Ideas12NXSeries GROUP: PPD/MECHANICAL DEPARTMENT