| REV | DESCRIPTION | DRAWN | DATE |
|---|---|---|---|
| | | APPROVED | DATE |

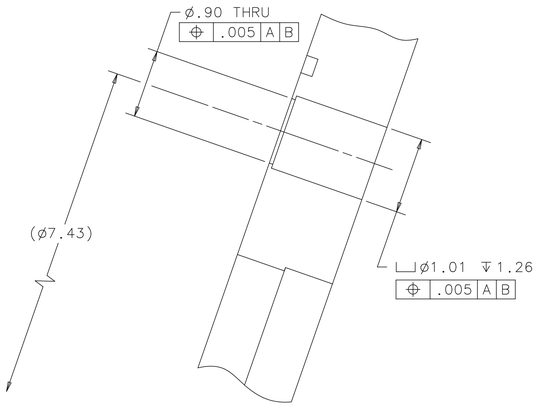


SECTION D–D
2-PLACES
SCALE: 1:1

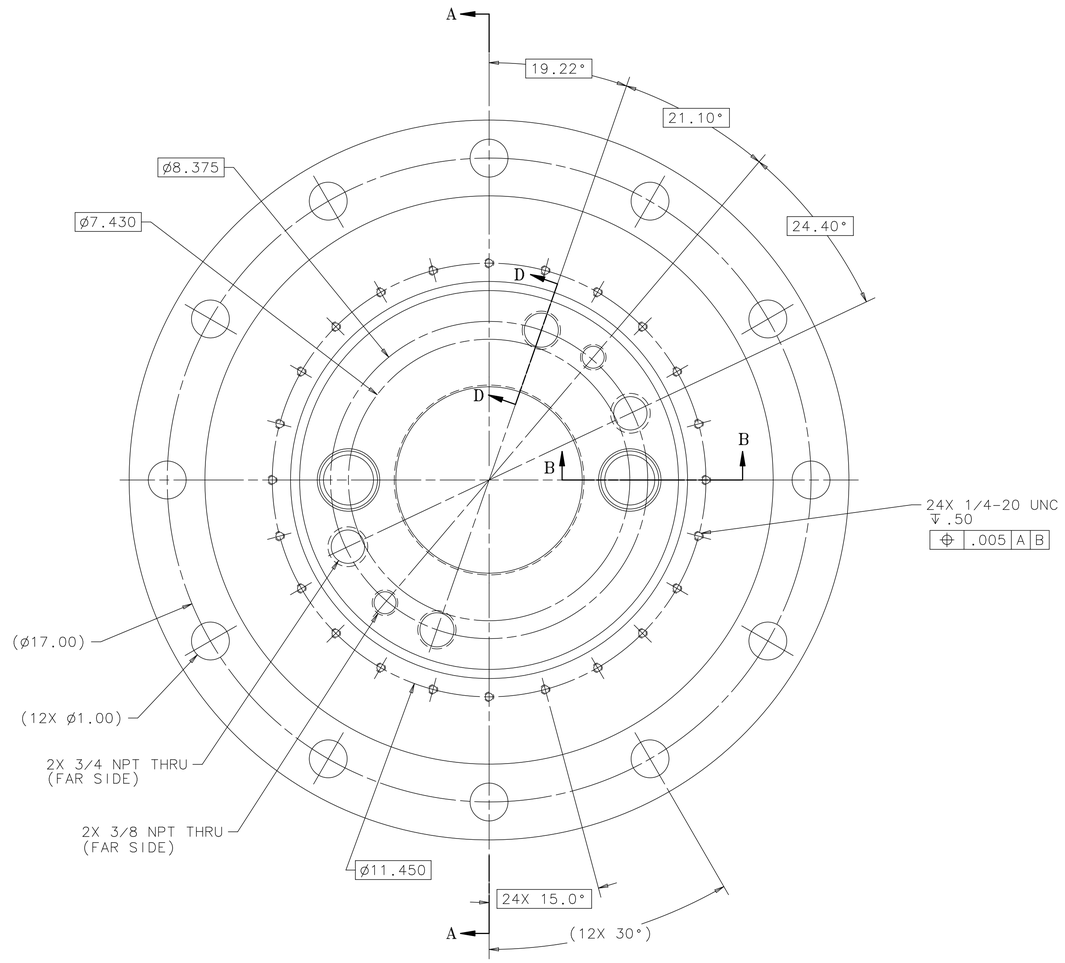


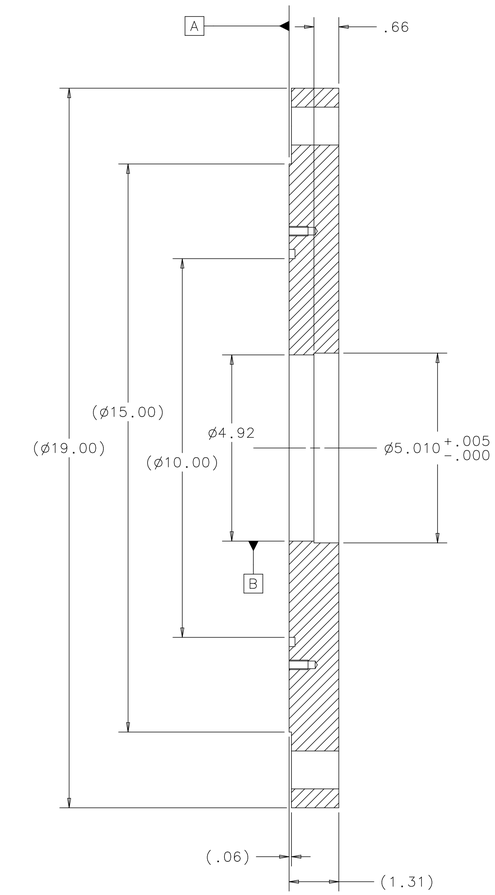


SECTION A–A

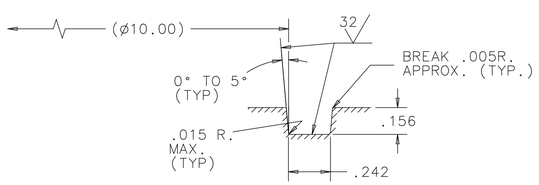


DETAIL C
"O" RING GROOVE
(NOT TO SCALE)

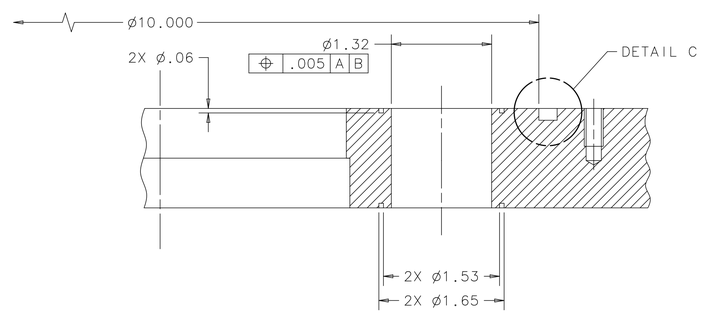


SECTION B–B
2-PLACES
SCALE: 1:1


NOTICE: IMAGE OBTAINED FROM FERMILAB WEB SITE

This information is provided for REFERENCE use only. Not for MANUFACTURE, or DESIGN INFORMATION. All information contained in this document represents work sponsored by an agency of the U.S. Government. Neither the U.S. Government nor any agency thereof, nor Universities Research Association, Inc., nor any of their employees or officers, makes any warranty, express or implied, or assumes any legal liability or responsibility for the accuracy, completeness, or usefulness of any information, apparatus, product or process disclosed, or represents that its use would not infringe privately owned rights.


| UNLESS OTHERWISE SPECIFIED | | | ORIGINATOR | H.CEASE | 20-JUL-2010 |
|---|---|---|---|---|---|
| .XX | .XXX | ANGLES | DRAWN | V.MAJDANSKI | 20-JUL-2010 |
| ± .02 | ± .005 | ± 1° | CHECKED | B.ELLISON | 26-JUL-2010 |
| | | | APPROVED | H.CEASE | 26-JUL-2010 |

1. BREAK ALL SHARP EDGES .015 MAX.
2. DO NOT SCALE DRAWING.
3. DIMENSIONS BASED UPON ASME Y14.5M-1994
4. MAX. ALL MACH. SURFACES 125
5. DRAWING UNITS: US INCHES

USED ON: ME-486111

MATERIAL: 19.00 O.D. 150# BLIND FLANGE 304 STN. STL.

FERMI NATIONAL ACCELERATOR LABORATORY
UNITED STATES DEPARTMENT OF ENERGY

# MECHANICAL/GAS SYSTEMS/GAS SOLID-XENON VESSEL-ASSY VER2 XENON TOP FLANGE V2

| SCALE | DRAWING NUMBER | SHEET | REV |
|---|---|---|---|
| 1:2 & AS NOTED | 9214.000-MD-486123 | 1 OF 1 | |

CREATED WITH : Ideas12NXSeries | GROUP: PPD/MECHANICAL DEPARTMENT