REV	DESCRIPTION	DRAWN	DATE
		APPROVED	DATE

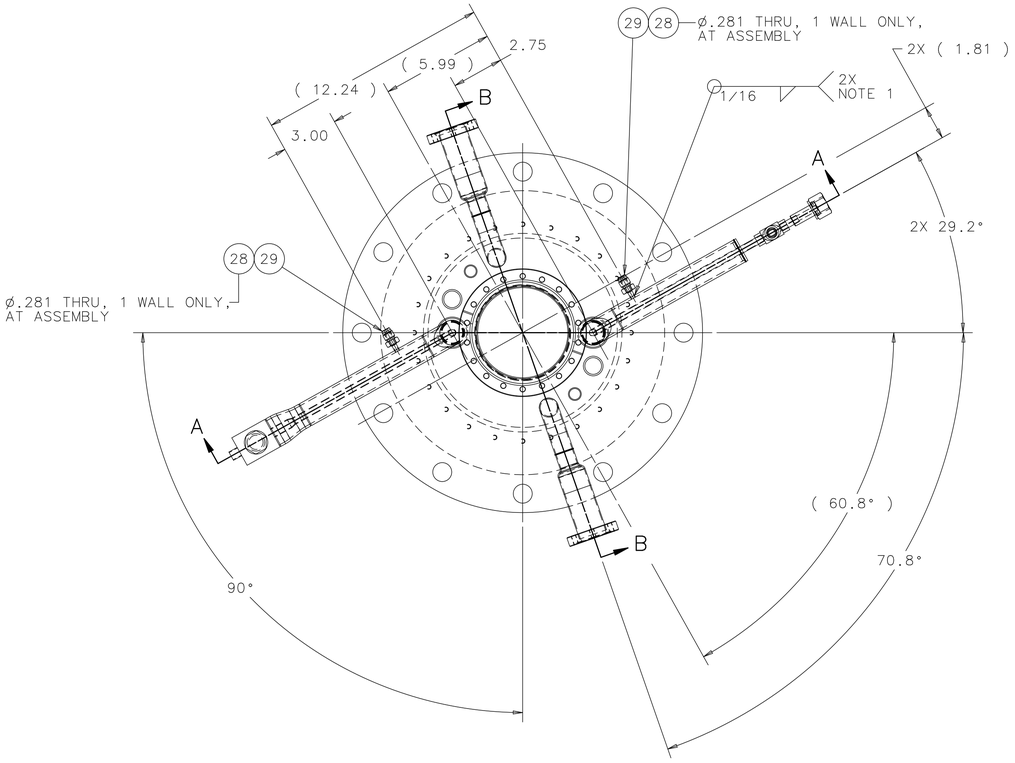

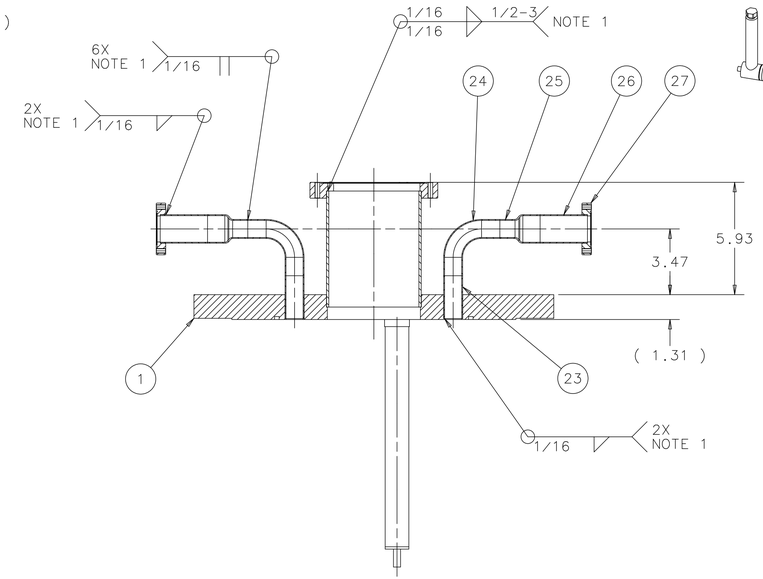

SECTION B-B

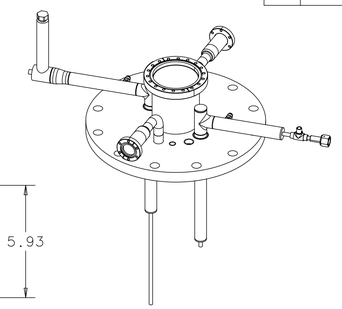

ISOMETRIC VIEW

SCALE= 1:8

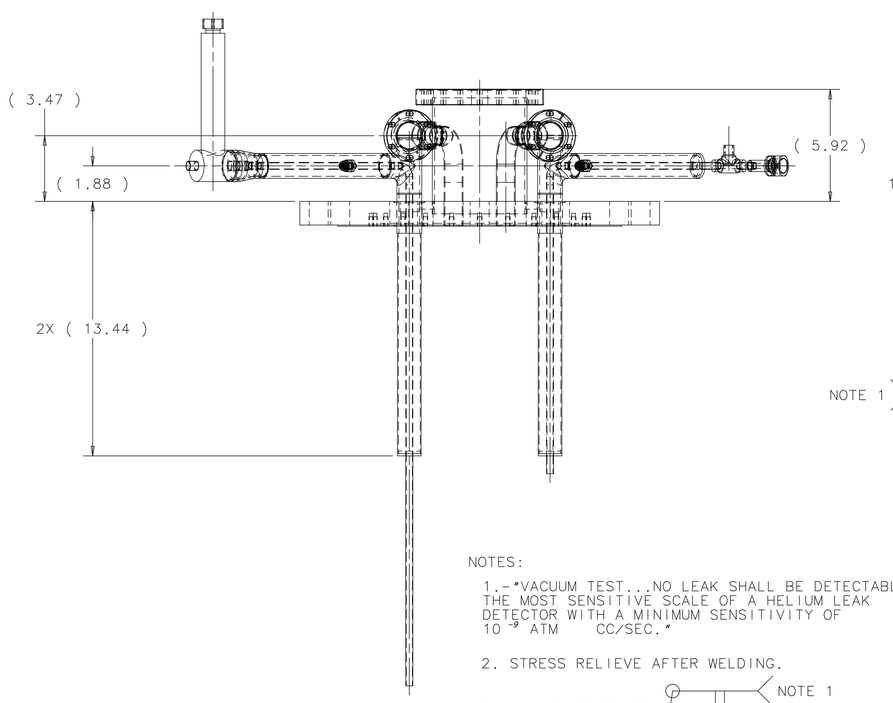

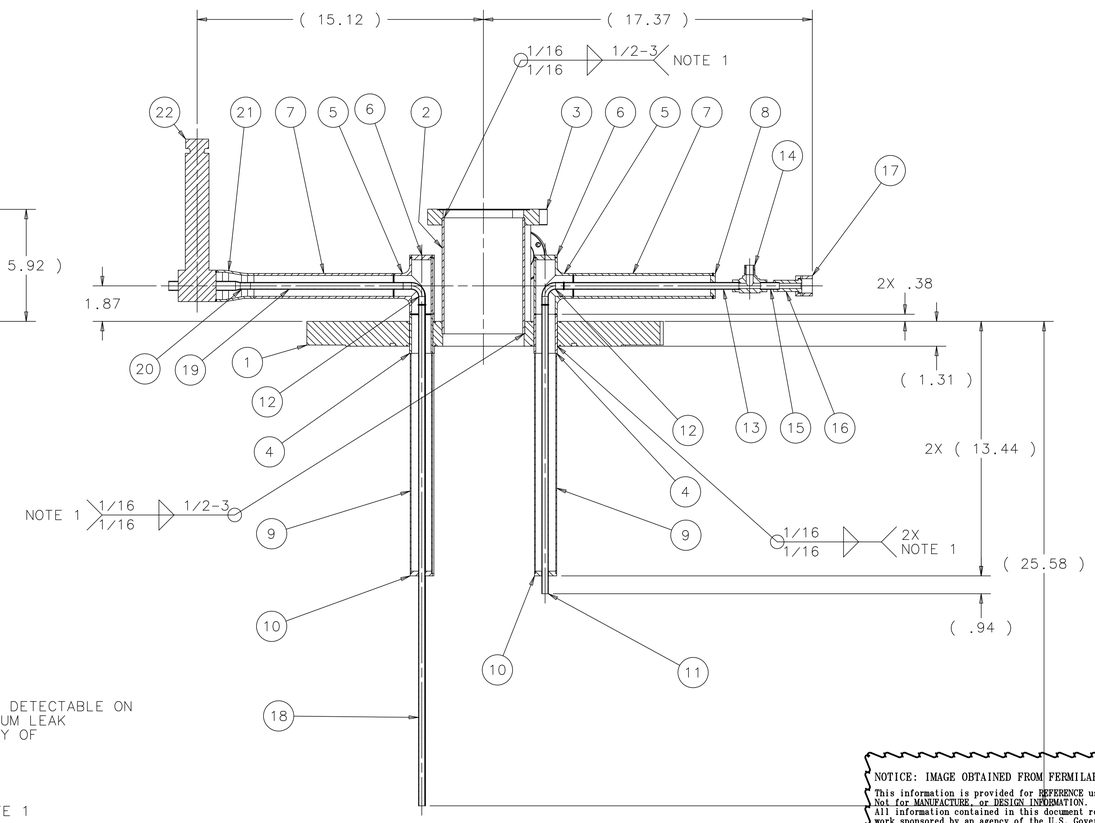

SECTION A-A

NOTES:

1.- "VACUUM TEST...NO LEAK SHALL BE DETECTABLE ON THE MOST SENSITIVE SCALE OF A HELIUM LEAK DETECTOR WITH A MINIMUM SENSITIVITY OF 10^{-9} ATM CC/SEC."

2. STRESS RELIEVE AFTER WELDING.

3. ALL WELDS TO BE NOTE 1 UNLESS SPECIFIED OTHERWISE.

ITEM	PART NO.	DESCRIPTION OR SIZE	QTY.
29	SS-4-VCR-4	MALE NUT;VCR; 304 STN. STL.;SWAGELOK CORP.	2
28	6LV-4-VCR-3-4TB3	GLAND;LONG;VCR; 304 STN. STL.;SWAGELOK CORP.	2
27	130014	FLANGE;2-3/4 DIA. X 1.50 TUBE;NON-ROT.; 304 STN. STL.;MDC HIGH VACUUM COMPONENTS	2
26	COM'L.	TUBE;1-1/2 O.D. X .049 WALL X 2.50 LG.; 304 STN. STL.	2
25	5MM-16-24	TRANSITION;MALE;1-00 X 1-1/2 TUBE; 304 STN. STL.;TRULY TUBULAR CORP.	2
24	90MM-16	90° ELBOW;1.00 TUBE;MALE END; 304 STN. STL.;TRULY TUBULAR CORP.	2
23	COM'L.	TUBE;1-00 O.D. X .049 WALL X 2.26 LG.; 304 STN. STL.	2
22	C5041-M11	1/2 O.D. TUBE CRYOGENIC VALVE; CRYOCOMP CRYOGENIC AND VACUUM COMPONENTS	1
21	COM'L.	1.00 SCH10S X 1-1/4 SCH10S PIPE REDUCER; 304 STN. STL.	1
20	5MM-6-8	TRANSITION;MALE;3/8 X 1/2 TUBE; 304 STN. STL.;TRULY TUBULAR CORP.	1
19	COM'L.	TUBE;3/8 O.D. X .028 WALL X 8.06 LG.; 304 STN. STL.	1
18	COM'L.	TUBE;3/8 O.D. X .028 WALL X 26.45 LG.; 304 STN. STL.	1
17	SS-8-VCR-1	FEMALE NUT;VCR; 304 STN. STL.;SWAGELOK CORP.	1
16	SS-6-VCR-3	3/8 TUBE SOCKET WELD GLAND;VCR; 304 STN. STL.;SWAGELOK CORP.	1
15	COM'L.	TUBE;3/8 O.D. X .028 WALL X 1.00 LG.; 304 STN. STL.	1
14	6SW	MALE BRANCH TEE;3/8 TUBE X 1/4 MNPT;SKT WELD; 304 STN. STL.;PARKER HANNIFAN CORP.	1
13	COM'L.	TUBE;3/8 O.D. X .028 WALL X 9.25 LG.; 304 STN. STL.	1
12	90MM-6	90° ELBOW;3/8 TUBE;MALE ENDS; 304 STN. STL.;TRULY TUBULAR CORP.	2
11	COM'L.	TUBE;3/8 O.D. X .028 WALL X 15.25 LG.; 304 STN. STL.	1
10	MB-486115	BLANK OFF PLATE 1-1/4 TUBE	2
9	COM'L.	TUBE;1-1/4 O.D. X .049 WALL X 11.63 LG.; 304 STN. STL.	2
8	MB-486113	BLANK OFF PLATE 1.00 PIPE	1
7	COM'L.	1.00 SCH10S PIPE X 7.38 LG.; 304 STN. STL.	2
6	MB-486114	BLANK OFF PLATE 1.00 PIPE	2
5	COM'L.	1.00 SCH10S TEE; 304 STN. STL.	2
4	COM'L.	1.00 SCH10S PIPE X 2.06 LG.; 304 STN. STL.	2
3	110029	FLANGE;6-3/4 DIA. X 5.00 TUBE;NON-ROT.; 304 STN. STL.;MDC HIGH VACUUM COMPONENTS	1
2	COM'L.	TUBE;5.00 O.D. X .120 WALL X 6.13 LG.; 304 STN. STL.	1
1	MD-486123	XENON TOP FLANGE V2	1

PARTS LIST

UNLESS OTHERWISE SPECIFIED			ORIGINATOR	H.CEASE	16-JUL-2010
.XX	.XXX	ANGLES	DRAWN	B.ELLISON	16-JUL-2010
± .02	± ***	± 1°	CHECKED	H.CEASE	26-JUL-2010
			APPROVED	H.CEASE	26-JUL-2010

1. BREAK ALL SHARP EDGES .015 MAX.
2. DO NOT SCALE DRAWING.
3. DIMENSIONS BASED UPON ASME Y14.5M-1994
4. MAX. ALL MACH. SURFACES 125
5. DRAWING UNITS:U.S.INCH

USED ON: MD-486129

MATERIAL: SEE PARTS LIST ABOVE

FERMI NATIONAL ACCELERATOR LABORATORY
UNITED STATES DEPARTMENT OF ENERGY

SOLID XENON VESSEL GAS SYSTEM TOP FLANGE WELDMENT V2

SCALE	DRAWING NUMBER	SHEET	REV
1:4 & AS NOTED	9214.000-MD-486111	1 OF 1	

CREATED WITH : Ideas12NXSeries | GROUP: PPD/MECHANICAL DEPARTMENT

NOTICE: IMAGE OBTAINED FROM FERMILAB WEB SITE

This information is provided for REFERENCE use only. Not for MANUFACTURE or DESIGN INFORMATION. All information contained in this document represents work sponsored by an agency of the U.S. Government. Neither the U.S. Government nor any agency thereof, nor Universities Research Association, Inc., nor any of their employees or officers, makes any warranty, express or implied, or assumes any legal liability or responsibility for the accuracy, completeness, or usefulness of any information, apparatus, product or process disclosed, or represents that its use would not infringe privately owned rights.