Fermilab

Particle Physics Division
Mechanical Department Engineering Note

Number: MD-ENG-234 Date: March 15 2010

Project Internal Reference:

Project: E-665

Title: E-665 Target Table Spacer

Author(s): Mike Zuckerbrot

Reviewer(s): James R. Kilmer

Key Words: E-665, Target table

Applicable Codes: ASME below the hook lifting fixtures

Abstract Summary:

Maximum stress and deflections are calculated on the target spacer table by hand calculations and an FEA analysis that correlates with the results.

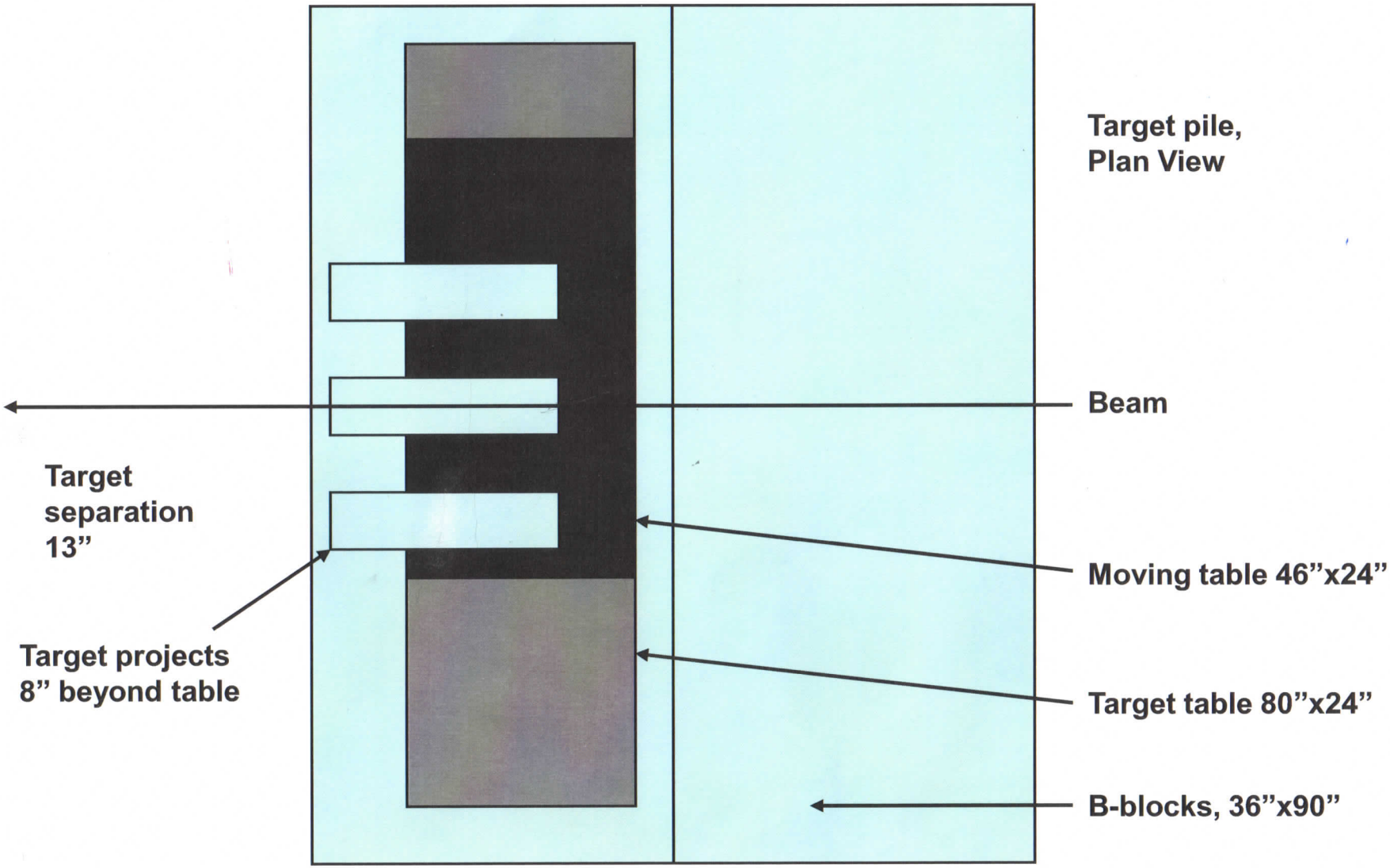
Target pile,
Plan View
Beam
Target
separation
13”
Moving table 46”x24”
Target projects
8” beyond table
Target table 80”x24”
B-blocks, 36”x90”

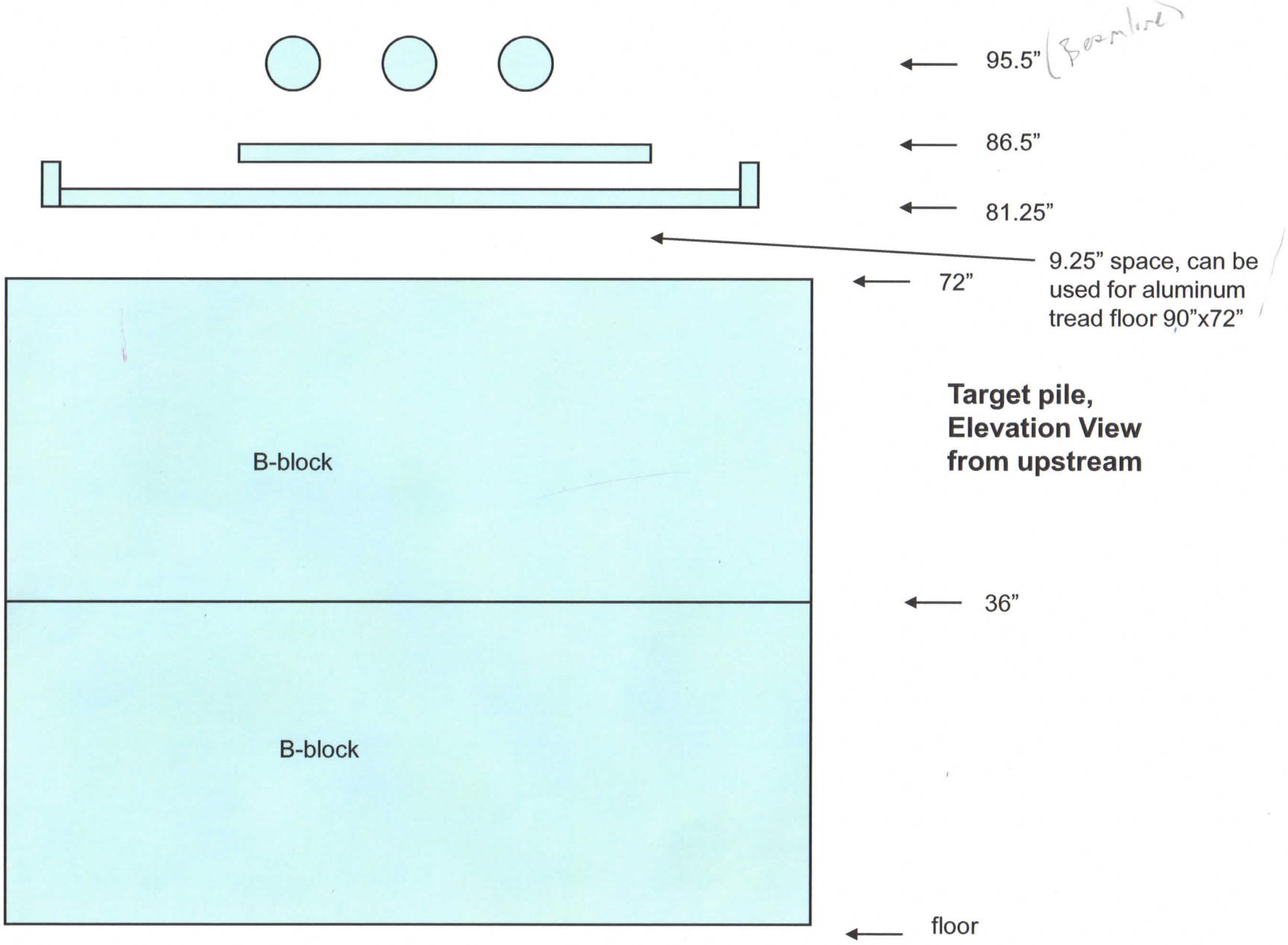

Target pile, Elevation View from upstream

Zuckerbrot 3/10/10

Fermilab
Fermi National Accelerator Laboratory
P.O. Box 500 • Batavia, Illinois • 60510

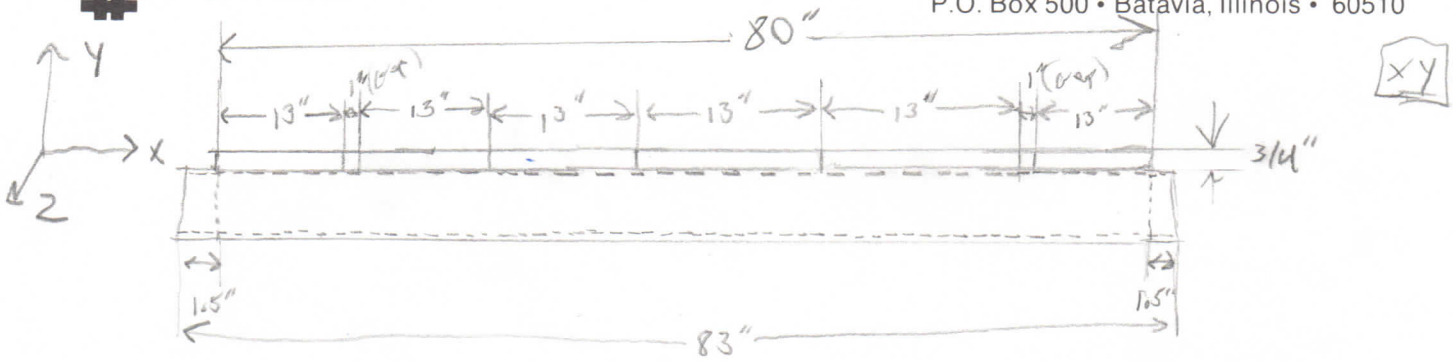

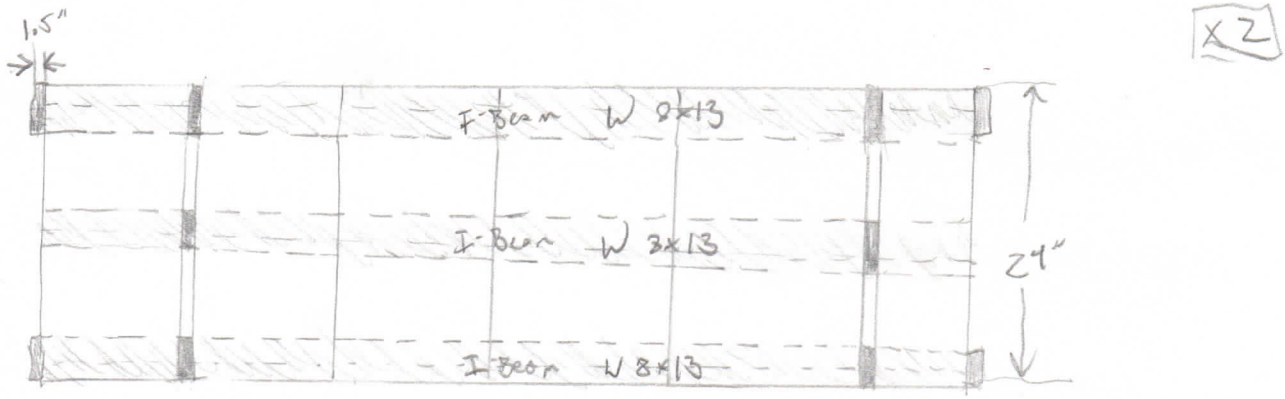

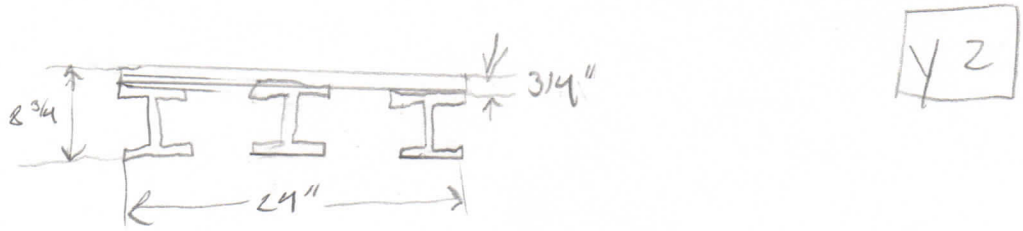

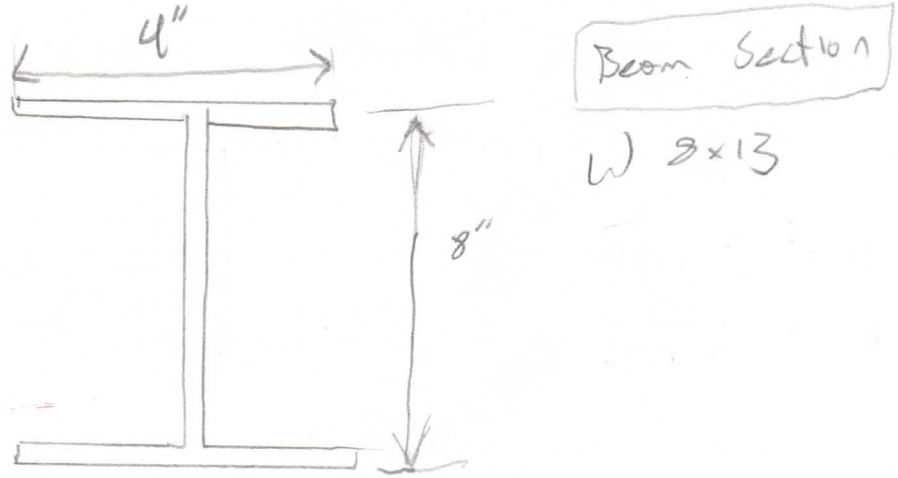

Materials Available

3/4" thick 6061 Aluminum plate: 13" x 205"

8x4" I-beam: ≈ 300"

Fermilab

Fermi National Accelerator Laboratory
P.O. Box 500 • Batavia, Illinois • 60510

Discussion

→ Weight of the moving table and everything above it will be set to P = 1000 #

→ Load will be considered equally distributed over the area being considered, no moment created by targets

→ Tabletop will be welded to the beams in 13" sections with 2, 1" gaps left due to availability of materials

→ Maximum stress and deflection of the tabletop will be calculated with the following methods:

a) flat plate with full load distributed evenly over only 1 plate

b) as a beam with the full load distributed evenly over only 1 plate

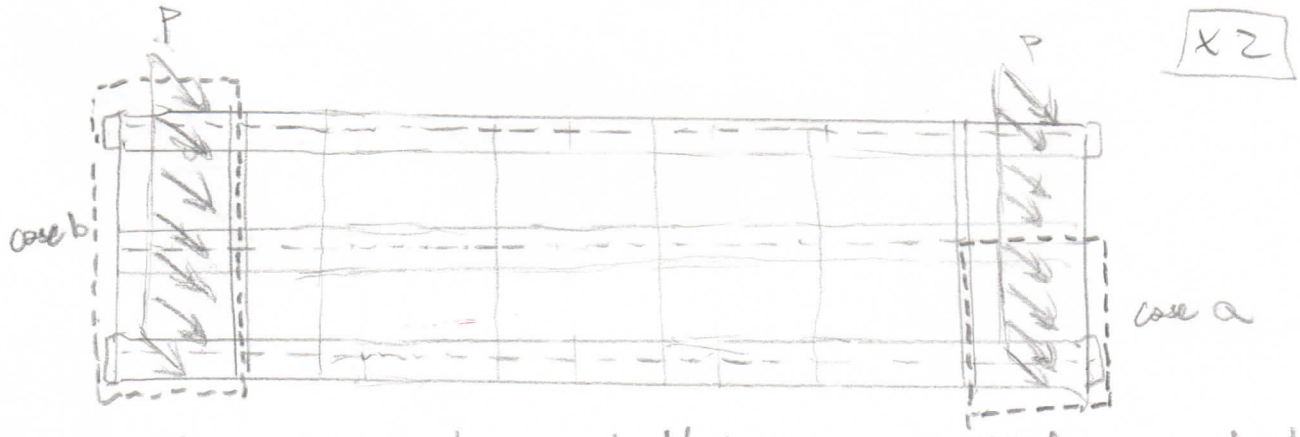

→ End beams overhang tabletop by 1.5" for eyebolts for lifting fixture

→ $\frac{1}{2}$" Gap b/w B-blocks and beams will be left open for shims if the floor is not level

Fermilab

Fermi National Accelerator Laboratory
P.O. Box 500 • Batavia, Illinois • 60510

a) from Roark's Formulas for Stress and Strain, 6th ed.

1/2 P → Table 26, case 5a

$\boxed{\times 2}$

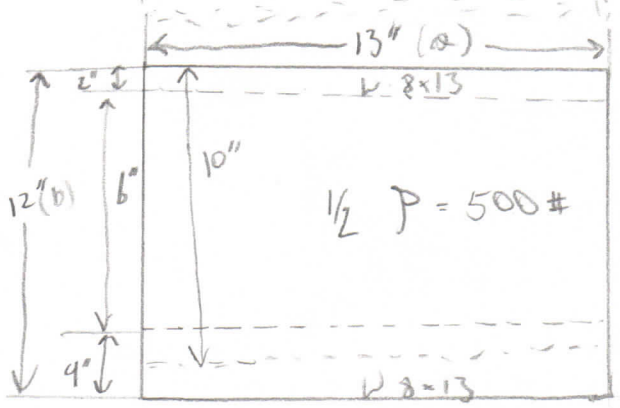

effective plate ⟹

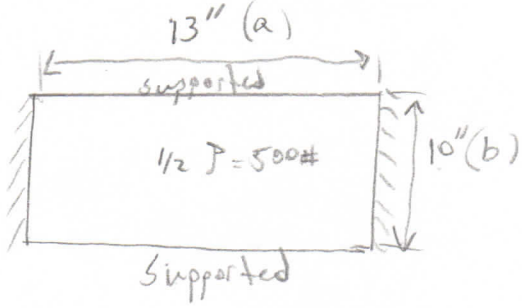

$$\left(\frac{a}{b}\right)_{true} = \frac{13}{10} \rightarrow 1.3$$

@ $\frac{a}{b} = 1.3$: $\beta = .5598$, $\alpha = .04255$

Max σ (at center of 13" edge)

$$\sigma_{max} = \frac{-\beta q b^2}{t^2} \quad ; \quad q = \frac{\frac{1}{2}P}{a \times b} = \frac{500}{(10 \times 13)} = 3.85 \ \#/in^2$$

$$\sigma_{max} = \frac{-(.5598)(3.85)(10)^2}{(3/4)^2} = \boxed{-383.2 \text{ psi}} < 8 \text{ ksi} \quad \underline{ok}$$

Max δ (at center)

$$\delta_{max} = \frac{-\alpha q b^4}{E t^3} = \frac{-(.04255)(3.85)(10)^4}{(10^7)(3/4)^3} = \boxed{.00039''} \quad \underline{ok}$$

Fermilab

Fermi National Accelerator Laboratory
P.O. Box 500 • Batavia, Illinois • 60510

b) from Aluminum beam Formulas

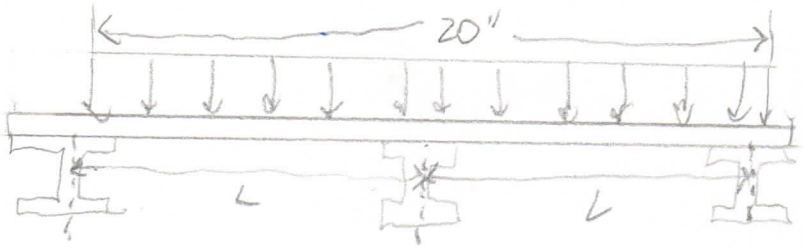

$\boxed{Y^2}$

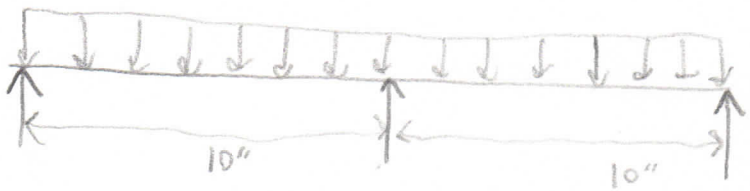

$\boxed{Y2}$

$$M_{max} = \frac{-1}{8} w L^2 \quad ; \qquad w = \frac{P}{2L} = \frac{1000\#}{20''} = 50\ \#/in$$

$$M_{max} = \frac{-1}{8}(50)(10)^2 = 625\ \#\cdot in$$

$$\sigma_{max} = \frac{M_{max} c}{I} = \frac{(625)(\frac{3/4}{2})}{\frac{1}{12}(13)(3/4)^3} = \boxed{512.8\ psi} < 8000\ psi \quad \underline{ok}$$

$$\delta_{max} = .00541 \frac{wL^4}{EI} = .00541 \frac{(50)(10)^4}{(10^7)\frac{1}{12}(13)(3/4)^3} = \boxed{.00059''} \quad \underline{ok}$$

Hand Calculations

	σ_{max} (psi)	δ_{max} (in)
as beam	512.8	0.00059
as flat plate	382.2	0.00039

FEA

	σ_{max} (psi)	δ_{max} (in)
1 Plate, 1000#	321	.000411
Full table 1500/500# (see figure)	342	.00039

→ FEA deflections and stresses agree fairly well

Fermilab

Fermi National Accelerator Laboratory
P.O. Box 500 • Batavia, Illinois • 60510

→ End Beam(s) connections to target table

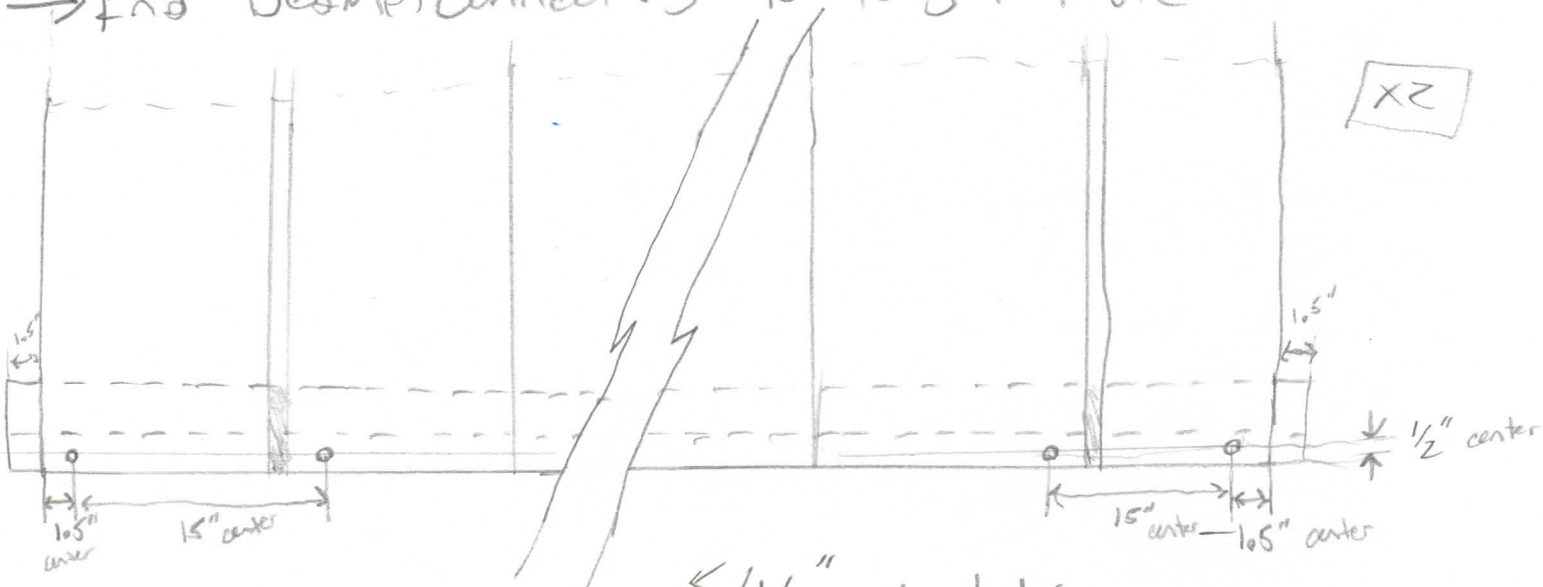

4 - 5/16" o.d. holes on both end beams - through table top and beam top (existing on target table)

→ B-block anchors (end beams only)

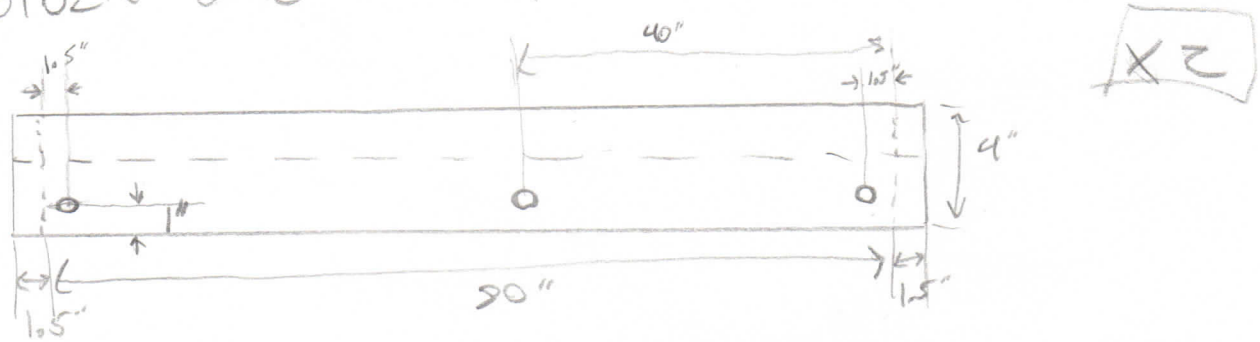

→ Each end beam will have 3 - 1/2" o.d. holes for shim and/or B-block anchors/connections

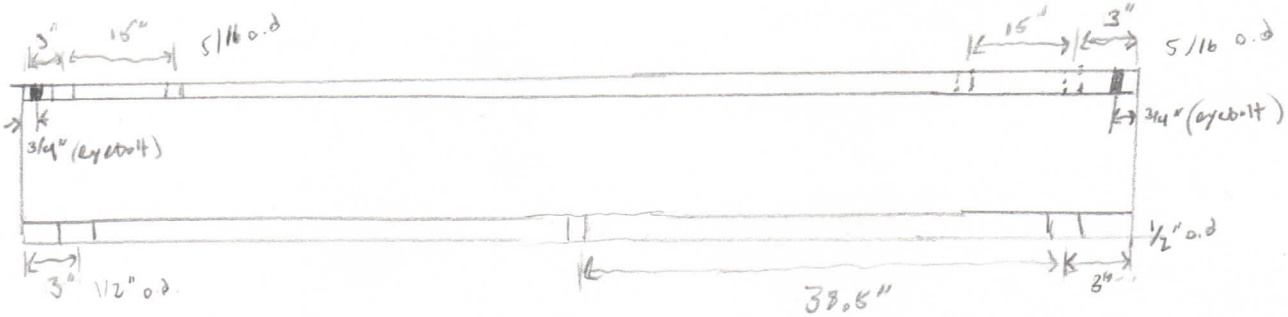

Fermilab
Fermi National Accelerator Laboratory
P.O. Box 500 • Batavia, Illinois • 60510

Eyebolts

→ $F_y = 30$ ksi

→ Assume load is 2000# / 4 eyebolts → 500# per bolt

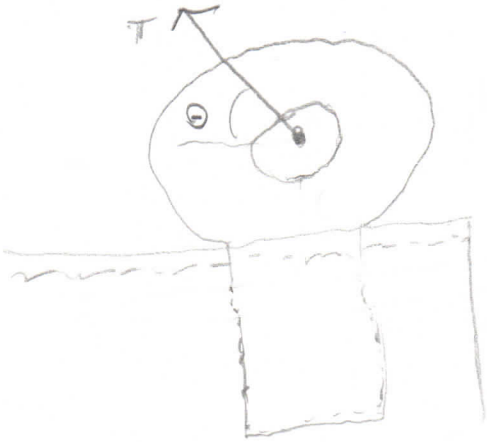

→ Limit θ to > 45° and < 90°

→ Consider Tension

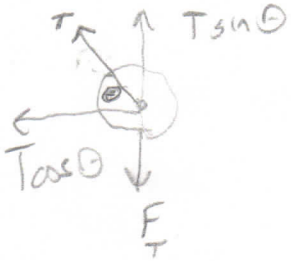

→ Tension ; $F_t = \frac{F_y}{N_s} = \frac{30}{3} = 10$ ksi

$$f_{t_{max}} = \frac{T\sin(90)}{A_c} = \frac{500}{\pi r^2} = 10 \text{ ksi} \rightarrow r_{min,t} = .126''$$

→ Shear ; $F_v = 10$ ksi

$$f_{v_{max}} = \frac{T\cos(45)}{A_c} = \frac{354}{\pi r^2} = 10 \text{ ksi} \rightarrow r_{min,v} = .106''$$

→ Set to M30 x 3.5 x 153 mm eyebolt

shank thickness: 30 / 25.4 = 1.18"

eye thickness: 24 / 25.4 = .94" x 2 sides = 1.89"

→ Check stresses at shank

$$f_t = \frac{500}{\frac{1}{4}\pi(1.18)^2} = 457.2 \text{ psi} < 10 \text{ ksi} \quad \underline{ok}$$

$$f_v = \frac{354}{\frac{1}{4}\pi(1.18)^2} = 323.7 \text{ psi} < 10 \text{ ksi} \quad \underline{ok}$$

→ Normal + shear: $\frac{F_y}{N_s} = 10 \text{ ksi} \leq \left[f_x^2 - f_x f_y + f_y^2 + 3 f_v^2\right]^{\frac{1}{2}} = \left[(324)^2 - (324)(457) + (457)^2 + 3(324)^2\right] = 693^{psi}$ <u>ok</u>

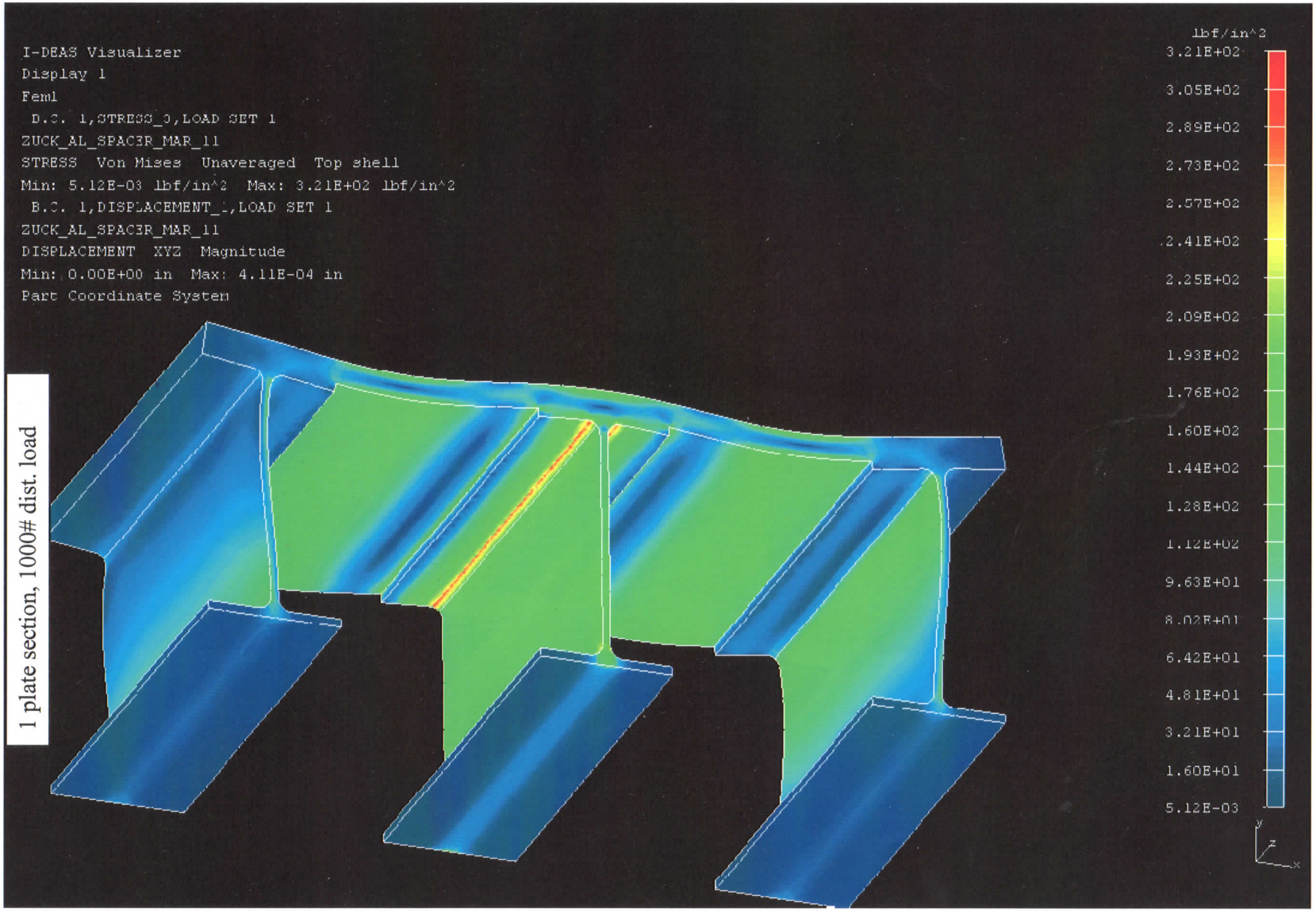

1 plate section, 1000# dist. load

As seen in hand calculations

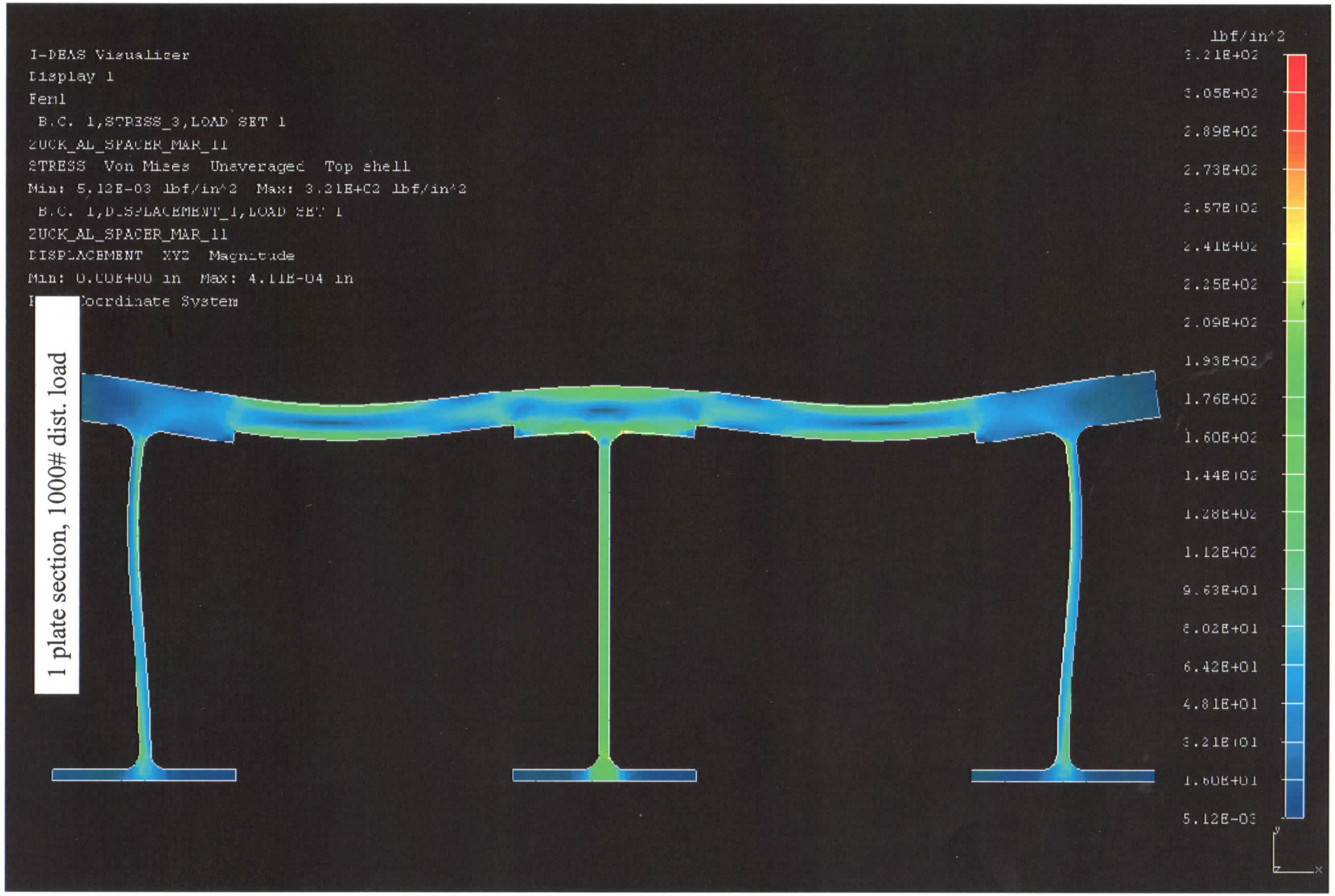

As seen in hand calculations

Full table, 1500# dist. Load on 3 plates,
500# dist. Load on other 3 plates

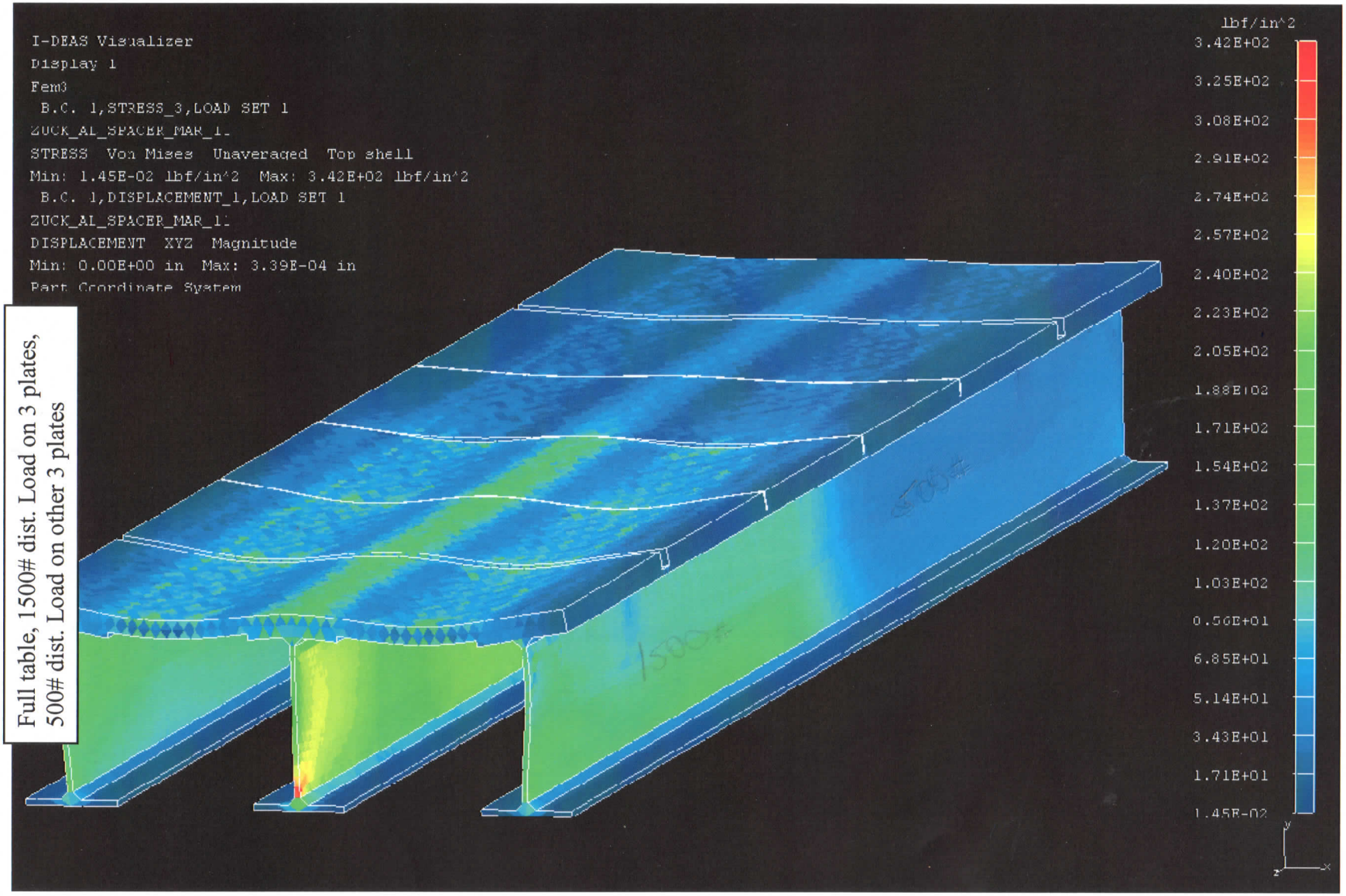

Full table / Full Load