Fermilab

ENGINEERING NOTE

NUMBER: MD-ENG.075 DATE: FEB. 2. 05

SYSTEM: UNIVERSITY OF CHICAGO - 1 LITER BUBBLE CHAMBER

TITLE: 1 LITER BUBBLE CHAMBER INSTALLATION IN THE "MINOS" DETECTOR HALL

AUTHOR(S): ANDREW SZYMULANSKI

REVIEWER:

ABSTRACT/SUMMARY:
THE 1 LITER BUBBLE CHAMBER APPARATUS, (1 LITER BUBBLE CHAMBER - OUTER VESSEL - PRESSURE VESSEL ENGINEERING NOTE: . . . . .) WILL BE INSTALLED IN THE MINOS TUNNEL, AND THIS DOCUMENTATION COMPRISES ESSENTIAL INSTALLATION INFORMATION.

KEY WORDS:
ESSENTIALS FOR TRANSPORTING, INSTALLING, AND HAZARD ANALYSIS ARE COVERED IN THIS DOCUMENTATION.

CONTENTS

1. DESCRIPTION

2. LIST OF DRAWINGS AND SKETCHES

3. COMPUTATIONS
3.0 LOAD SCHEMATIC FIG. 1
3.1 DETERMINE THE LEVEL OF GOVERNING STRESSES IN LIFTING EARS

3.2 —

3.3 IMPACT LOAD CASE

3.4 HAZARD ANALYSIS – CASE WITH INADEQUATE TORQUING OF UPPER (2), 3/4" BOLTS – FIG. 1

4. TRANSPORTATION ASPECTS / HANDLING SKETCHES

4.1 LIFTING ARRANGEMENT – ALTERNATIVE METHOD

4.2 BELOW THE HOOK LIFTING DEVICE – DIV. SPECIFIC NO. 155

5. WORK PLAN / HAZARD ANALYSIS

5.1 WORK DESCRIPTION – 1 LITER BUBBLE CHAMBER ASS'Y.

5.2 CONTROL LINES (ROPES)

5.3 SAFE GUARDING

5.3.1 COMMAND DIAGRAM

5.3.2 POTENTIAL ENERGY ISSUE

5.3.2.1 "H" VALUE FOR POTENTIAL ENERGY EQUATION

5.4 WORK DESCRIPTION – 1 TON CAPACITY GANTRY

5.5 SIGNATURE LIST OF WORKERS INVOLVED IN THE TASK OF HANDLING / TRANSPORTATION OF THE 1 LITER BUBBLE CHAMBER ASSEMBLY AND RELATED EQUIPMENT NEEDED FOR THIS.

6. REFERENCES

1. DESCRIPTION

THE INSTALLATION IS HOUSED IN "MINOS" TUNNEL, AND COMPRISES THE FOLLOWING EQUIPMENT:

a) 1 LITER BUBBLE CHAMBER APPARATUS/ASSEMBLY (VESSEL NO: 2595 [N.B. NO]) —
SEE: PRESSURE VESSEL ENGINEERING NOTE FOR: 1 LITER BUBBLE CHAMBER

- - - - - -

b) 1 LITER BUBBLE CHAMBER SHIELDING —
SKETCH: asz 11.19.04

c) 1 LITER BUBBLE CHAMBER SHIELDING/RESTRAIN

d) 1 TON CAPACITY GANTRY —
NL 1037 CRANE BLDG. NMS
SKETCH: asz 11.16.04

THE EQUIPMENT ARRANGEMENT IS SHOWN ON NuMI OUTFITTING, DRAWING NO: 6-7-6, A6 WITH MARKED UNITS.
THIS BACKGROUND LAYOUT AND ARRANGED EQUIPMENT IS CALLED:
SKETCH: asz 12.15.04
THE MINOS SERVICE BUILDING (MSB) LOCATION IS SHOWN ON DWG. NO: 6-7-5 (REV. 11)

2. LIST OF DRAWINGS AND SKETCHES

2.1 NuMI SERVICE BUILDINGS
DWG. NO 6-7-5 G1

2.2 NuMI OUTFITTING.
MINOS ACCESS SHAFT - SECTIONS
DWG. NO 6-7-6 A-24/
SKETCH: aSZ 12.16.04

2.3 NuMI OUTFITTING —
ABSORBERS AND MINOS ACCESS TUNNELS
DWG. 6-7-6 A6/ SKETCH aSZ 12.15.04

2.4 1 LITER BUBBLE CHAMBER / SHIELDING
SKETCH: aSZ 11.19.04

2.5 1 LITER BUBBLE CHAMBER - SHIELDING/ RESTRAIN COMPONENTS
SKETCH: aSZ 12.03.04

2.6 1 TON CAPACITY GANTRY - NL 1037 CRANE BLDG. NMS
SKETCH: aSZ 11.16.04

2.7 PHOTOGRAPH: 1Lbublechgantry1.jpg
[szymulanski@FNAL.GOV (computer file) DESKTOP]

2.8 PHOTOGRAPH: 1literbublechgantry2.jpg
[szymulanski@FNAL.GOV (computerfile) DESKTOP]

2.9 LIFTING EARS
SKETCH: aSZ 12.17.04

2.10 LIFTING EAR
SKETCH 4 OSZ 12.21.04

2.11 EXISTING LIFTING FIXTURE
NuMI 7.5 TON
ENG. SPEC. NO ES 294 414
SKETCH: OSZ 12.28.04

LIFTER WEIGHT 125 lbs
LOCATION: MI 8

2.1

NuMI SERVICE BUILDINGS | PAGE 6

PROJECT 6-7-5

DWG. NO 6-7-5 REV. 11 G1

NuMI SE
BUILDI
PROJECT

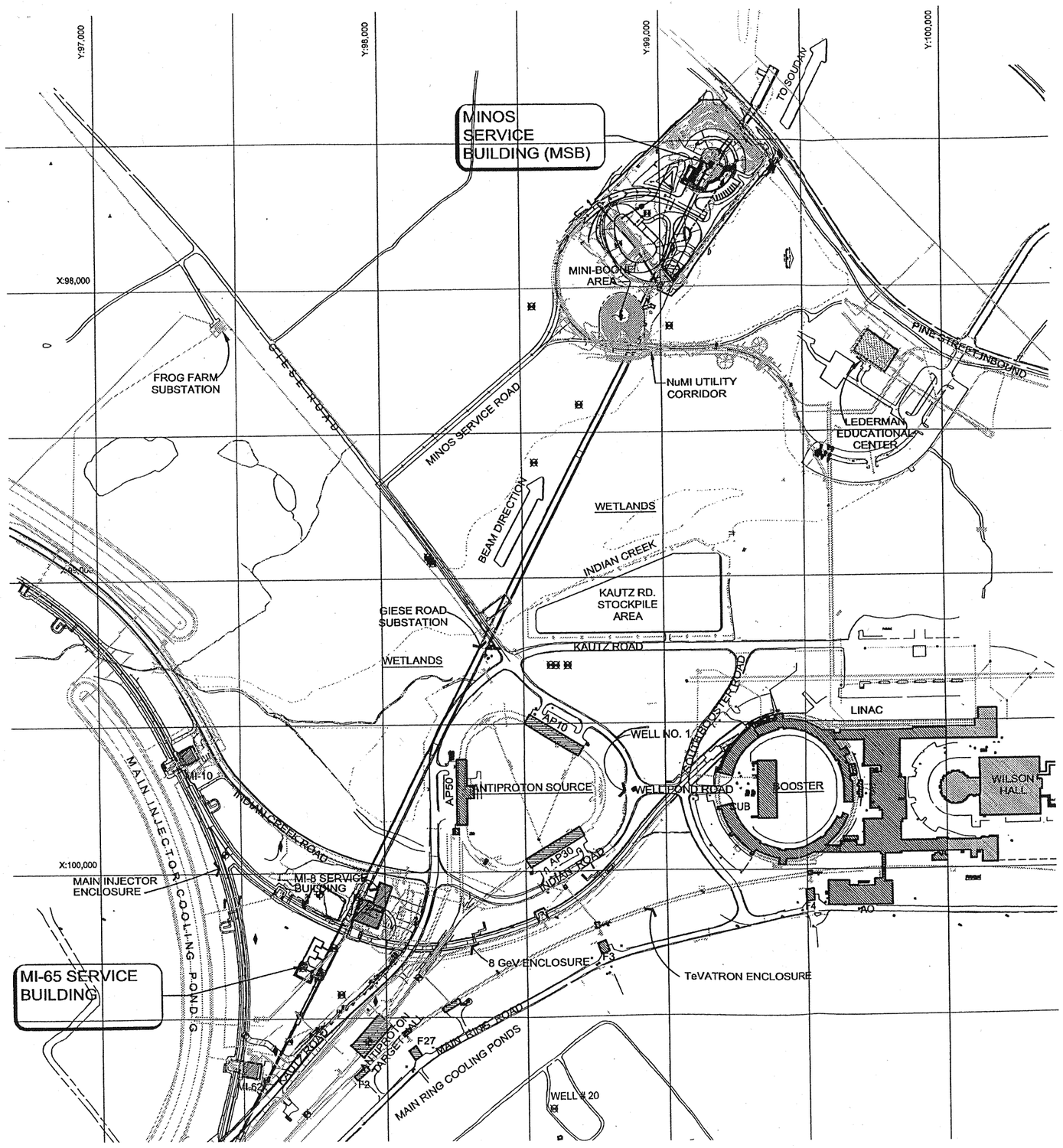

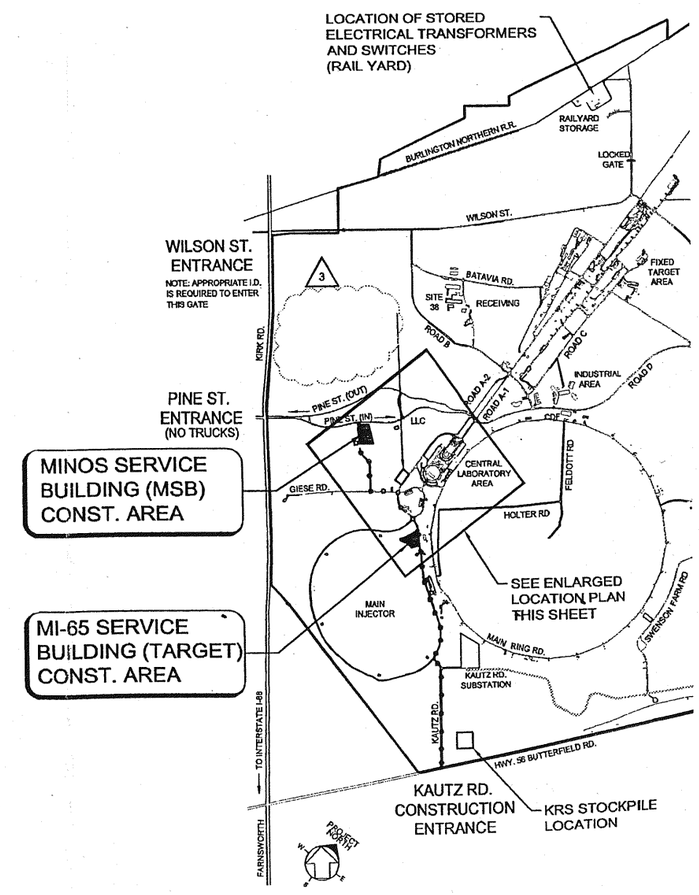

2.2

PAGE 7

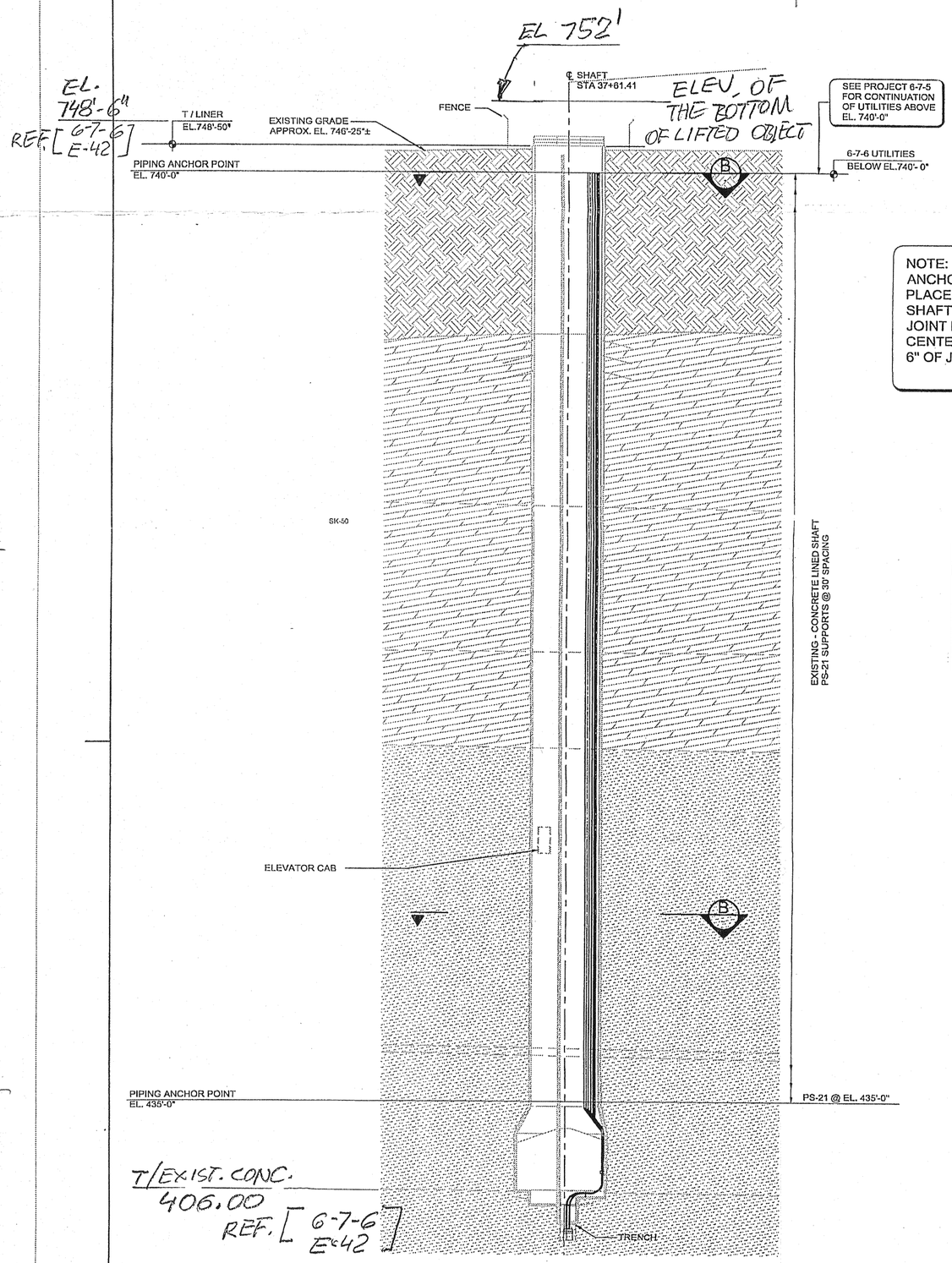

NOTE:
ANCHORS SHALL ONLY BE PLACED BETWEEN MINOS SHAFT LINING CONSTRUCTION JOINT LOCATIONS. NO ANCHOR CENTERLINE SHALL BE WITHIN 6" OF JOINT EDGE.

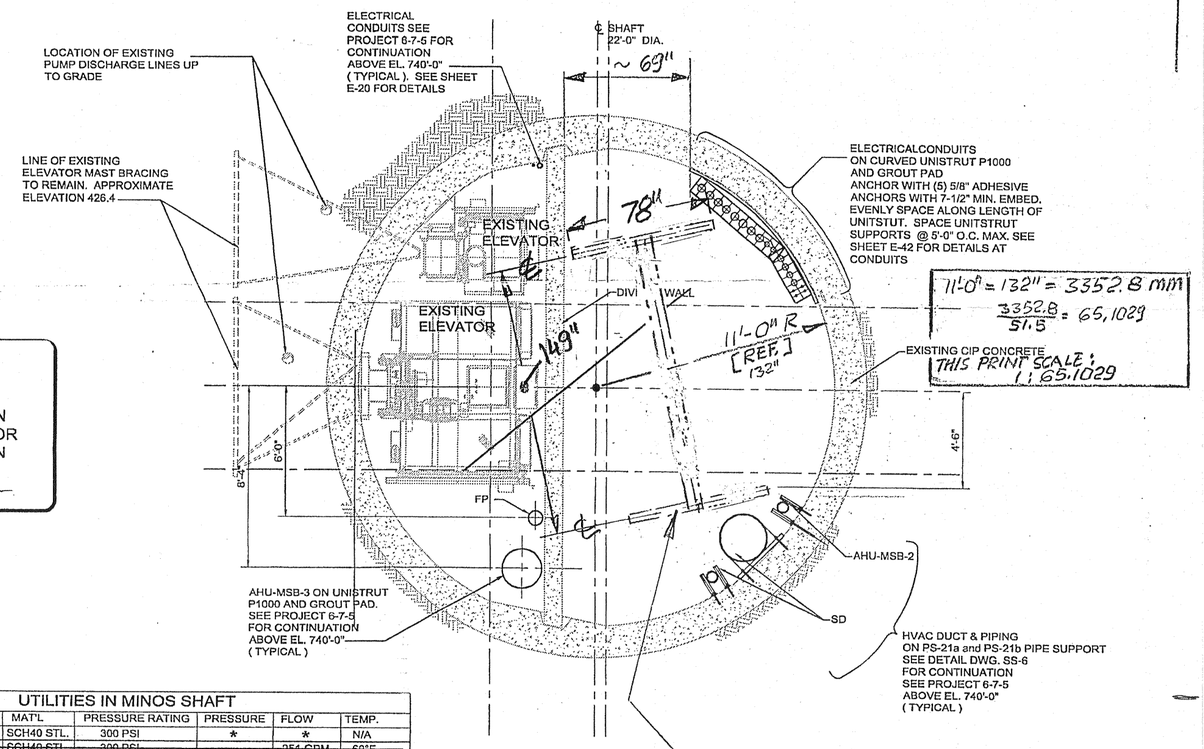

SECTION (B)
SCALE 3/8"=1'-0

UTILITIES IN MINOS SHAFT

SYSTEM	DIA.	INS.	MAT'L	PRESSURE RATING	PRESSURE	FLOW	TEMP.
FP	*	NO	SCH40 STL.	300 PSI	*	*	N/A
~~CHWR~~	~~4"~~	~~1 1/2"~~	~~SCH40 STL.~~	~~300 PSI~~	> ΔP=50 PSI	~~254 GPM~~	~~60°F~~
~~CHWS~~	~~4"~~	~~1 1/2"~~	~~SCH40 STL.~~	~~300 PSI~~		~~254 GPM~~	~~60°F~~
SD	6"	NO	SCH80 STL.	300 PSI	N/A	450 GPM	N/A
~~CCPWR~~	~~3"~~	~~NO~~	~~SCH40 STL.~~	~~300 PSI~~	~~NOT REQ'D~~	~~450 GPM~~	~~107°F~~
~~CCPWS~~	~~3"~~	~~NO~~	~~SCH40 STL.~~	~~300 PSI~~	~~NOT REQ'D~~	~~84 GPM~~	~~99°F~~
AHU-MSB-2	26"	NO	GALV. STL.	+2" WC	1.3" WC	5500 CFM	60°F MIN.
AHU-MSB-3	24"	NO	GALV. STL.	+2" WC	1.0" WC	3500 CFM	60°F MIN.

* TO BE DETERMINED BY FP SUB-CONTRACTOR

TRANSPORTED EQUIPMENT:

A. 1 TON CAPACITY GANTRY – NL 1037 CRANE BLDG. NMS (SKETCH: ASZ 11.16.04)

B. 1 LITER BUBBLE CHAMBER-ASSEMBLY

SECTION (A) (A-6)
SCALE 1/16"=1'-0

E-19, E-20, E-33, FPE-7, M-10, FP-3

REV.	DATE	DESCRIPTIONS
3	1/31/03	REVISION 6
2	10/30/02	REVISION 3
	8/15/02	CONFORMED SET

REVISIONS

FLUOR DANIEL CHICAGO ILLINOIS

A/E CONSULTANT		DATE	FERMILAB		DATE
DESIGNED	Z. SILJKOVIC	7/24/00	FINAL REVIEW	J. SIMS	01/16/02
DRAWN	Z. SILJKOVIC	7/24/00	ENG. ACCEPTED	E. CRUMPLEY	01/16/02
CHECKED	R. BRUNTON	7/24/00	FESS ACCEPTED	D. NEVIN	01/16/02
APPROVED	–		SUBMITTED	R. PLUNKETT/D. BOGERT	01/16/02

PROJECT NORTH

SCALE:
1/16"=1'-0" SCALE FEET
3/8"=1'-0" SCALE FEET

SK-50B, SK-50G

PART OF PROJECT 6-7-9

FERMI NATIONAL ACCELERATOR LABORA
UNITED STATES DEPARTMENT OF ENERGY

NuMI OUTFITTING
MINOS ACCESS SHAFT - SECTIO

DRAWING NO. 6-7-6 A-24

SKETCH: ASZ 12.16.04

SKETCH: asz 11.16.04

PAGE 8

GANTRY

SKETCH: asz 11.19.04

SKETCH: asz 12.03.04

SCALE 1: 129.9195

2260.6 / 17.4 = 129.9195

89" = 2260.6 mm (17.4 mm)

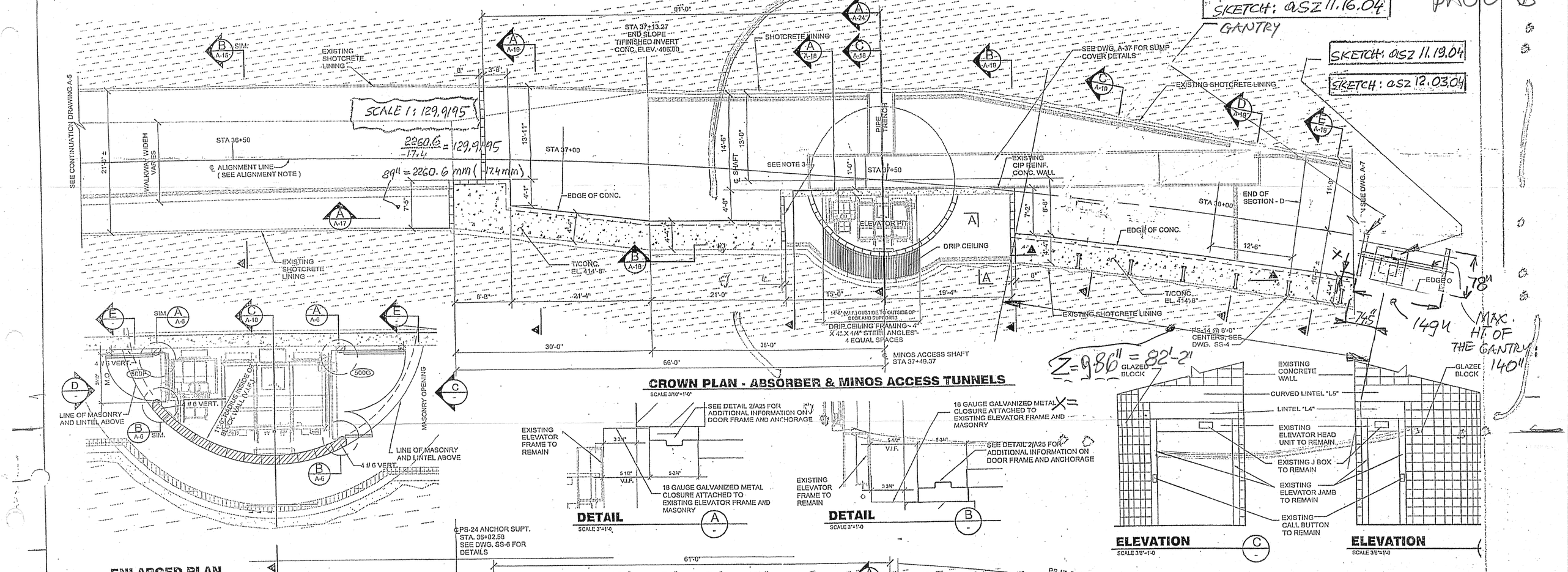

CROWN PLAN - ABSORBER & MINOS ACCESS TUNNELS
SCALE 3/16"=1'-0"

DETAIL A
SCALE 3"=1'-0

DETAIL B
SCALE 3"=1'-0

ELEVATION C
SCALE 3/8"=1'-0

ELEVATION
SCALE 3/8"=1'-0

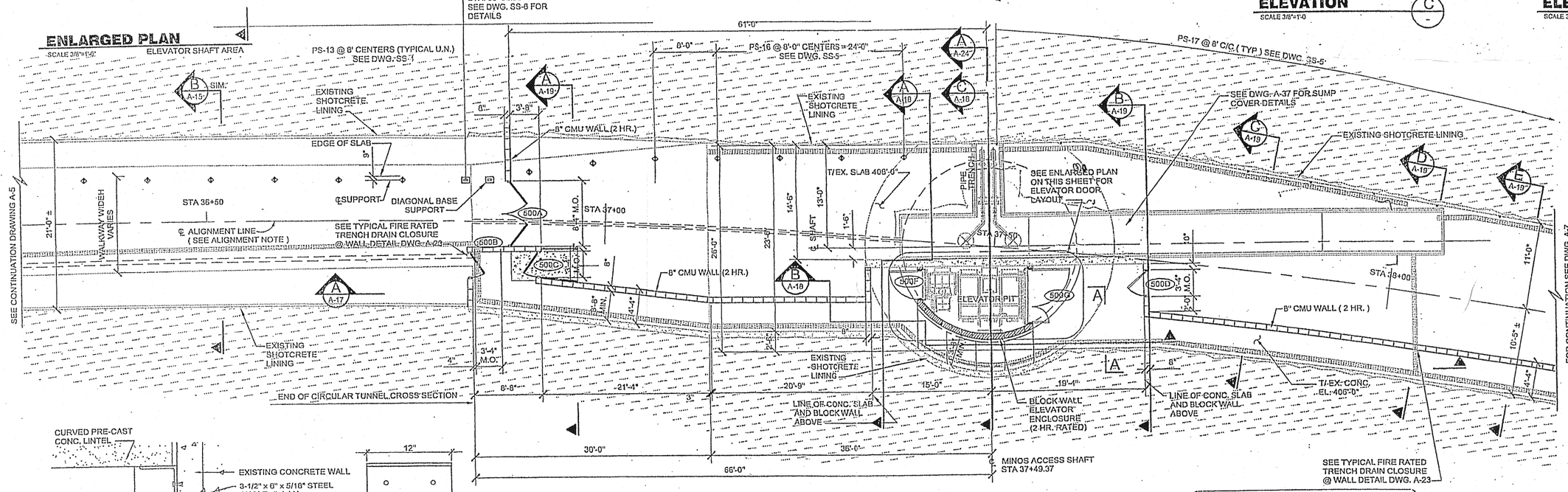

ENLARGED PLAN
SCALE 3/8"=1'-0"

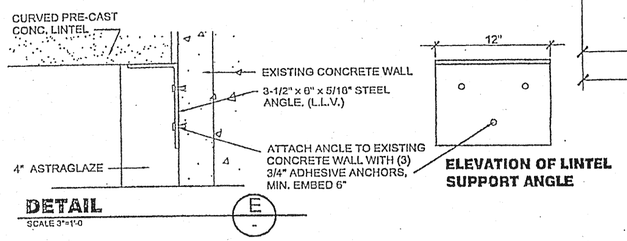

DETAIL E
SCALE 3"=1'-0

ELEVATION OF LINTEL SUPPORT ANGLE

INVERT PLAN - ABSORBER & MINOS ACCESS TUNNELS
SCALE 3/16"=1'-0"

ALIGNMENT NOTE:
THE ALIGNMENT LINE REFERS TO THAT LINE DESCRIBED BY THE DRAWING AND RELATED ALIGNMENT DATA SHOWN ON SHEET C-4. THIS LINE FORMS THE REFERENCE LINE BY WHICH WALL AND OTHER CONSTRUCTION SHOWN ON THIS DRAWING WILL BE ACCURATELY LOCATED.

NOTES:

1. SEE DWG. A-25 FOR DOOR AND LINTEL SCHEDULE.
2. SEE DWG. A-23 FOR CMU AND HANDRAIL DETAILS AND M
3. COORDINATE PENETRATION WITH FP SUBCONTRACTOR

PART OF PROJECT 6-7-9

REV.	DATE	DESCRIPTIONS
1	2/10/03	REVISION 8
	8/15/02	CONFORMED SET

REVISIONS

FLUOR DANIEL
CHICAGO ILLINOIS

A/E CONSULTANT		DATE	FERMILAB		DATE
DESIGNED	R. JEDZINIAK	7/24/00	FINAL REVIEW	J. SIMS	01/16/02
DRAWN	R. JEDZINIAK	7/24/00	ENG. ACCEPTED	E. CRUMPLEY	01/16/02
CHECKED	R. BRUNTON	7/24/00	FESO ACCEPTED	D. NEVIN	01/16/02
APPROVED			SUBMITTED	R. PLUNKETT/D. BOGERT	01/16/02

PROJECT NORTH

SCALE: 3/16"=1'-0" (2 0 2 4 6 8 10 12 14 SCALE FEET)

SK-30A, SK-30B, SK-43A, SK-43B

FERMI NATIONAL ACCELERATOR LABORA
UNITED STATES DEPARTMENT OF ENERGY

NuMI OUTFITTING
ABSORBER & MINOS ACCESS TU

DRAWING NO. 6-7-6 A-6

SKETCH: asz 12.15.04

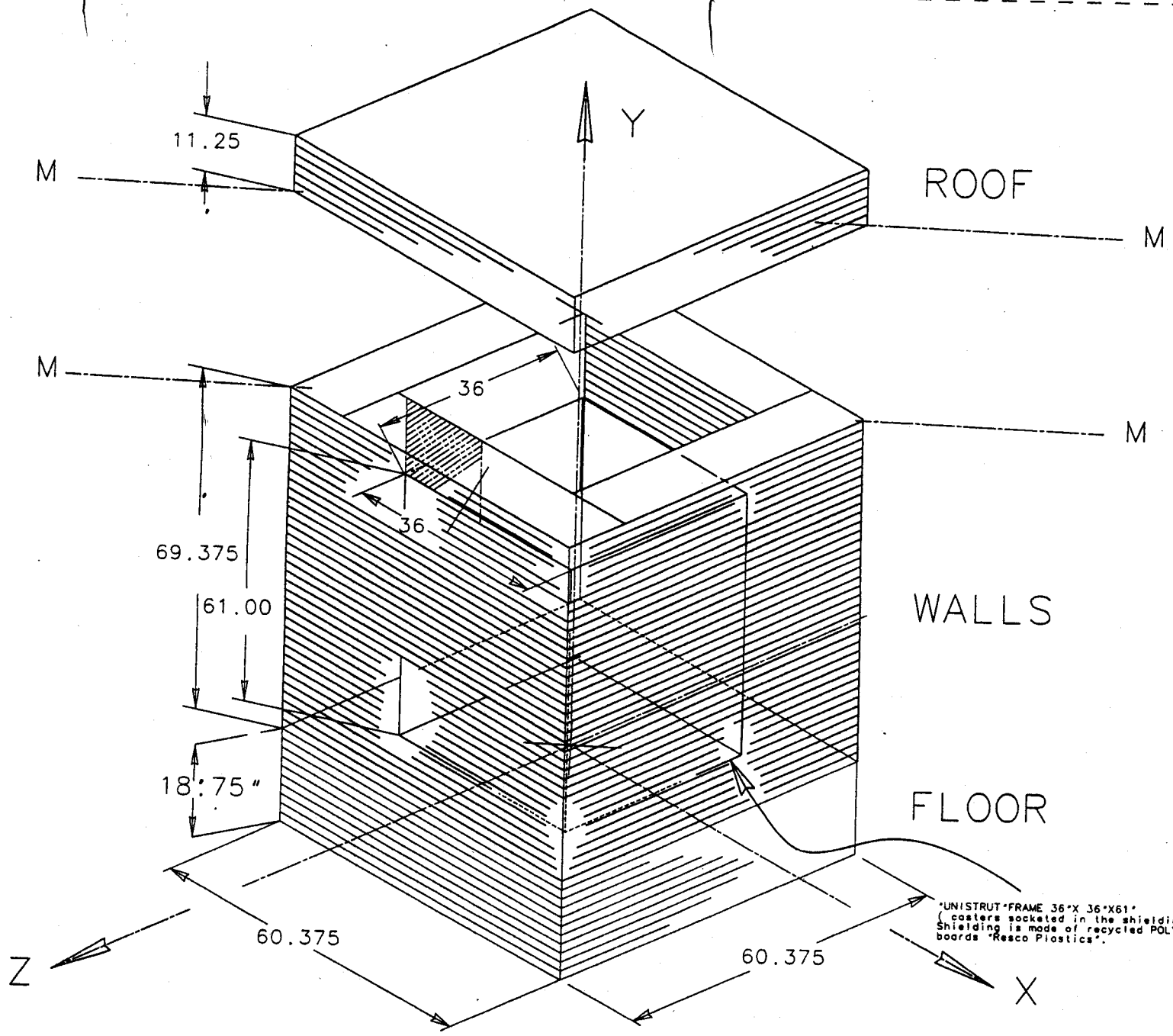

"UNISTRUT"FRAME 36"X 36"X61"
(casters socketed in the shielding).
Shielding is made of recycled POLYETHYLENE
boards "Resco Plastics".

NOV. 19, 2004

FERMI NATIONAL ACCELERATOR LABORATORY
UNITED STATES DEPARTMENT OF ENERGY

UNIVERSITY OF CHICAGO
1 LITER BUBBLE CHAMBER
SHIELDING

SKETCH 11.19.04

Plotted by szymalon on 19-Nov-04 , File: 1Lbubblechshielding.dwg

PAGE 9

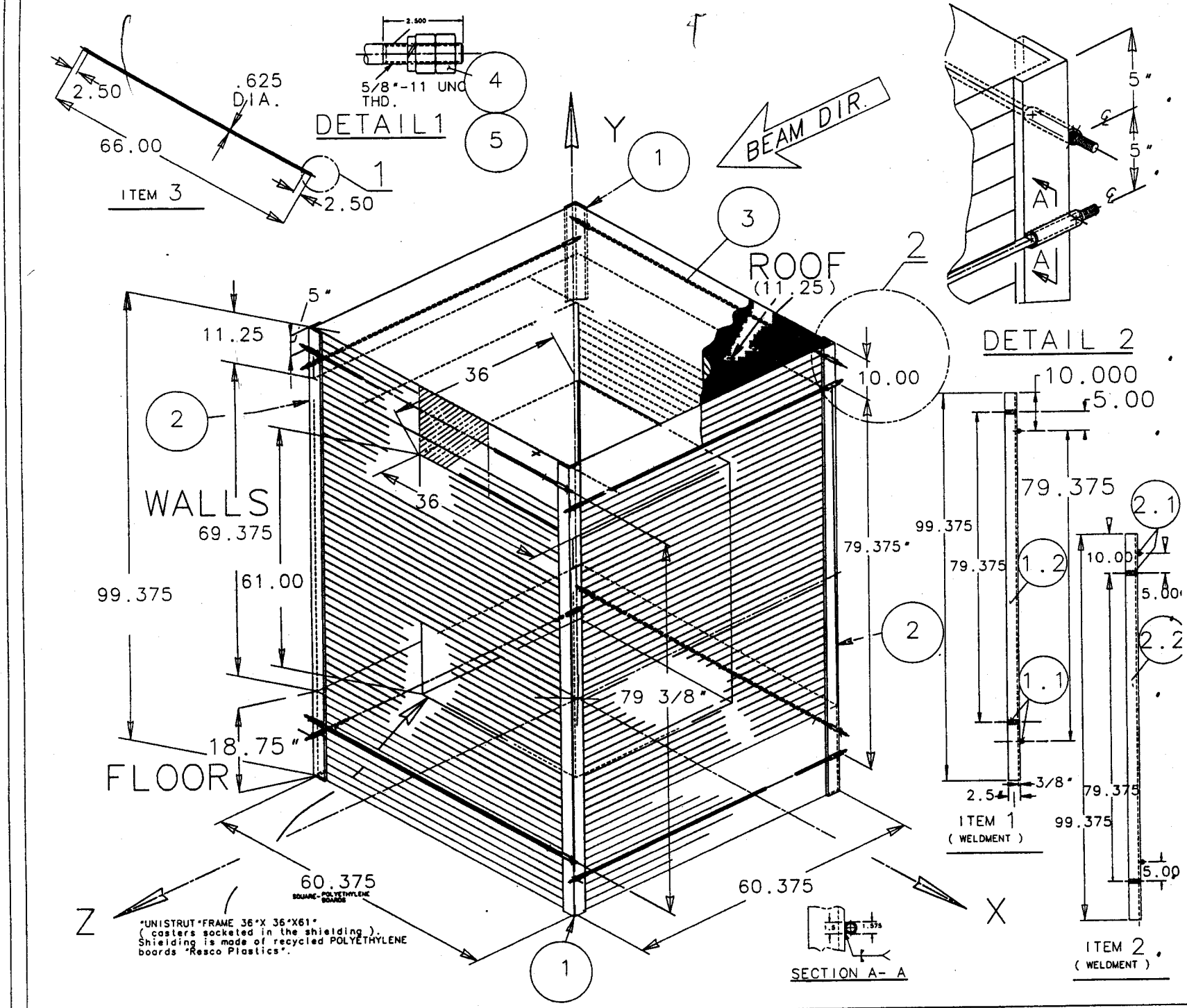

NOTES:
1. ITEM 4 McMASTER CARR CAT. PART NO : 91694A320
2. ITEM 5 McMASTER CARR CAT. PART NO : 90073A240

ITEM	MATERIAL	DESCRIPTION	Q'TY
5		5/8" SPRING LOCK WASHER 0.24 " THICK	16
4	ASTM A563 GRADE DH	5/8" -11 UNC HEX NUT	32
3		STEEL ROD 5/8" DIA X 66" LG.	8
2.2	ASTM-A36	ANGLE 2 1/2" X 2 1/2" X 3/8"wall X 99.375 "LG.	2
2.1	ASTM-A53	PIPE 1.050" O.D. X 0.154"WALL X 2.625" LG.	8
2		WELDMENT	2
1.2	ASTM-A36	ANGLE 2 1/2" X 2 1/2" X 3/8"wall X 99.375 "LG.	2
1.1	ASTM-A53	PIPE 1.050" O.D. X 0.154"WALL X 2.625" LG.	8
1		WELDMENT	2

ORIGINATOR	A.SZ.		
DRAWN	A.SZ.	DEC.03.04	
CHECKED			
APPROVED			
USED ON			
MATERIAL			

FERMI NATIONAL ACCELERATOR LABORATORY
UNITED STATES DEPARTMENT OF ENERGY

UNIVERSITY OF CHICAGO
1 LITER BUBBLE CHAMBER
SHIELDING /RESTRAIN COMP.

SCALE | DRAWING NUMBER SKETCH:psz12.03.04 | SHEET 1 OF 1 | REV

CREATED WITH : | GROUP:

Plotted by szymulan on 08-Dec-04 , File: 1LBBLCHCOMPONENTS.pff

2.5 PAGE 10

REF. DOCUMENT: "1 LITER BUBBLE CHAMBER INSTALLATION IN THE MINOS DETECTOR HALL" - ENGINEERING NOTE

SKETCH: aSZ 11.16.04

SKETCH: aSZ 11.19.04

SKETCH: aSZ 12.03.04

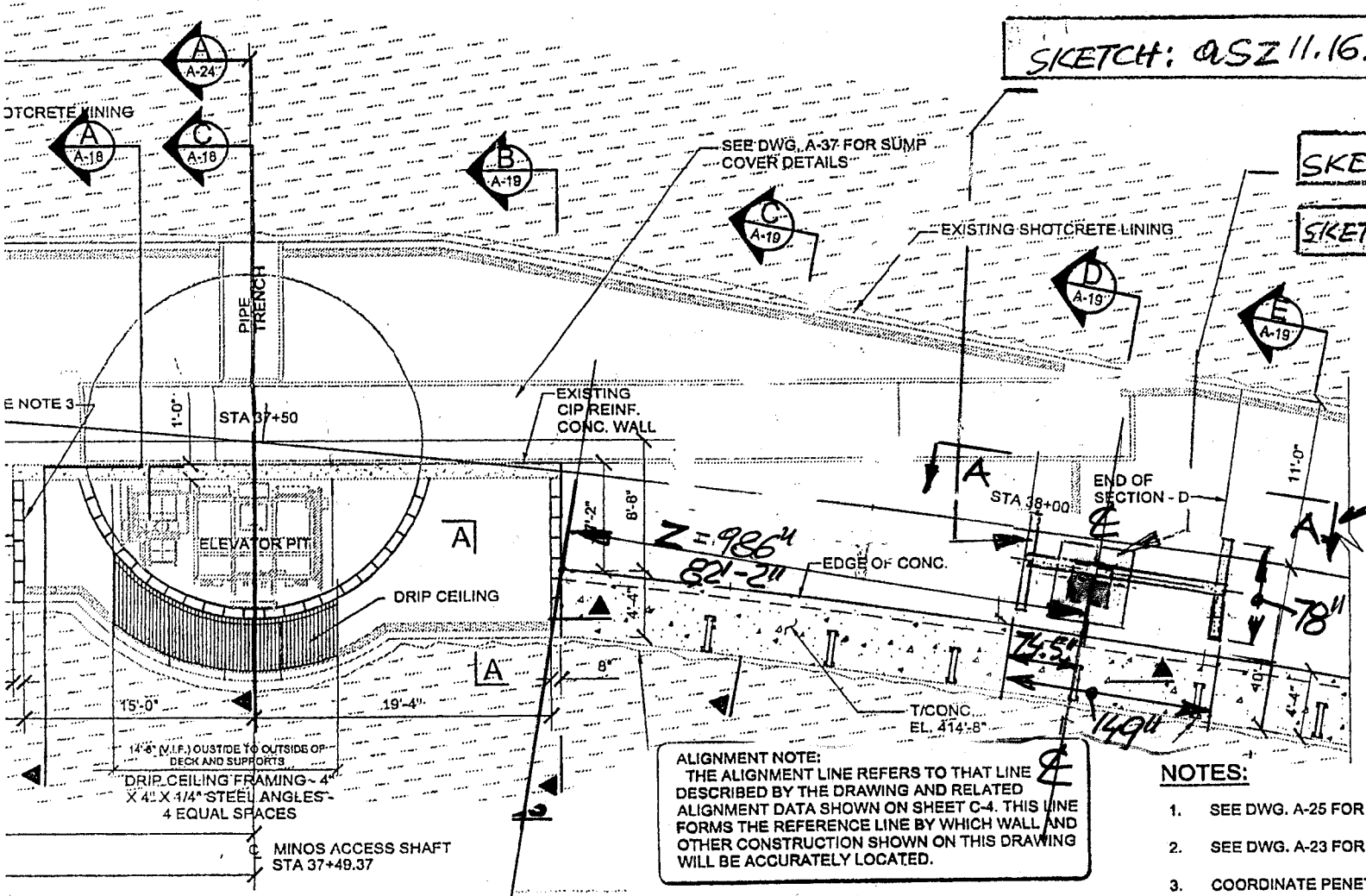

FOR SECTION SEE SKETCH aSZ 13.01.05

ALIGNMENT NOTE:
THE ALIGNMENT LINE REFERS TO THAT LINE DESCRIBED BY THE DRAWING AND RELATED ALIGNMENT DATA SHOWN ON SHEET C-4. THIS LINE FORMS THE REFERENCE LINE BY WHICH WALL AND OTHER CONSTRUCTION SHOWN ON THIS DRAWING WILL BE ACCURATELY LOCATED.

NOTES:

1. SEE DWG. A-25 FOR DOOR AND LINTEL SCHEDULE.
2. SEE DWG. A-23 FOR CMU AND HANDRAIL DETAILS AND N
3. COORDINATE PENETRATION WITH FP SUBCONTRACTOF

ORBER & MINOS ACCESS TUNNEL

PART OF PROJECT 6-7-9

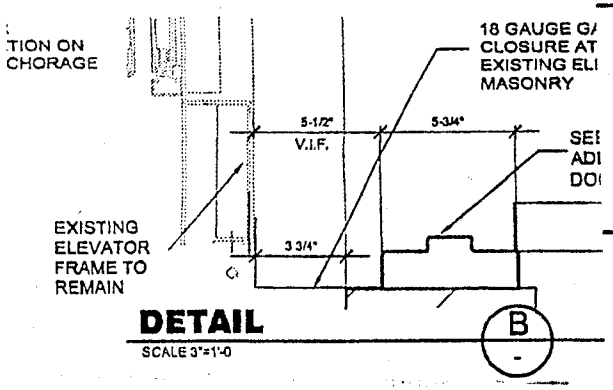

DETAIL B

SCALE 3"=1'-0

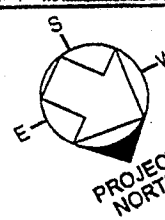

SCALE:

3/16"=1'-0" 2 0 2 4 6 8 10 12 14 SCALE FEET

SK-30A, SK-30B, SK-43A, SK-43B

FERMI NATIONAL ACCELERATOR LABORA

UNITED STATES DEPARTMENT OF ENERGY

NuMI OUTFITTING

ABSORBER & MINOS ACCESS TU

DRAWING NO. **6-7-6** **A-6**

SKETCH: aSZ 12.15.04

2

A.S.
NOV. 16, 20

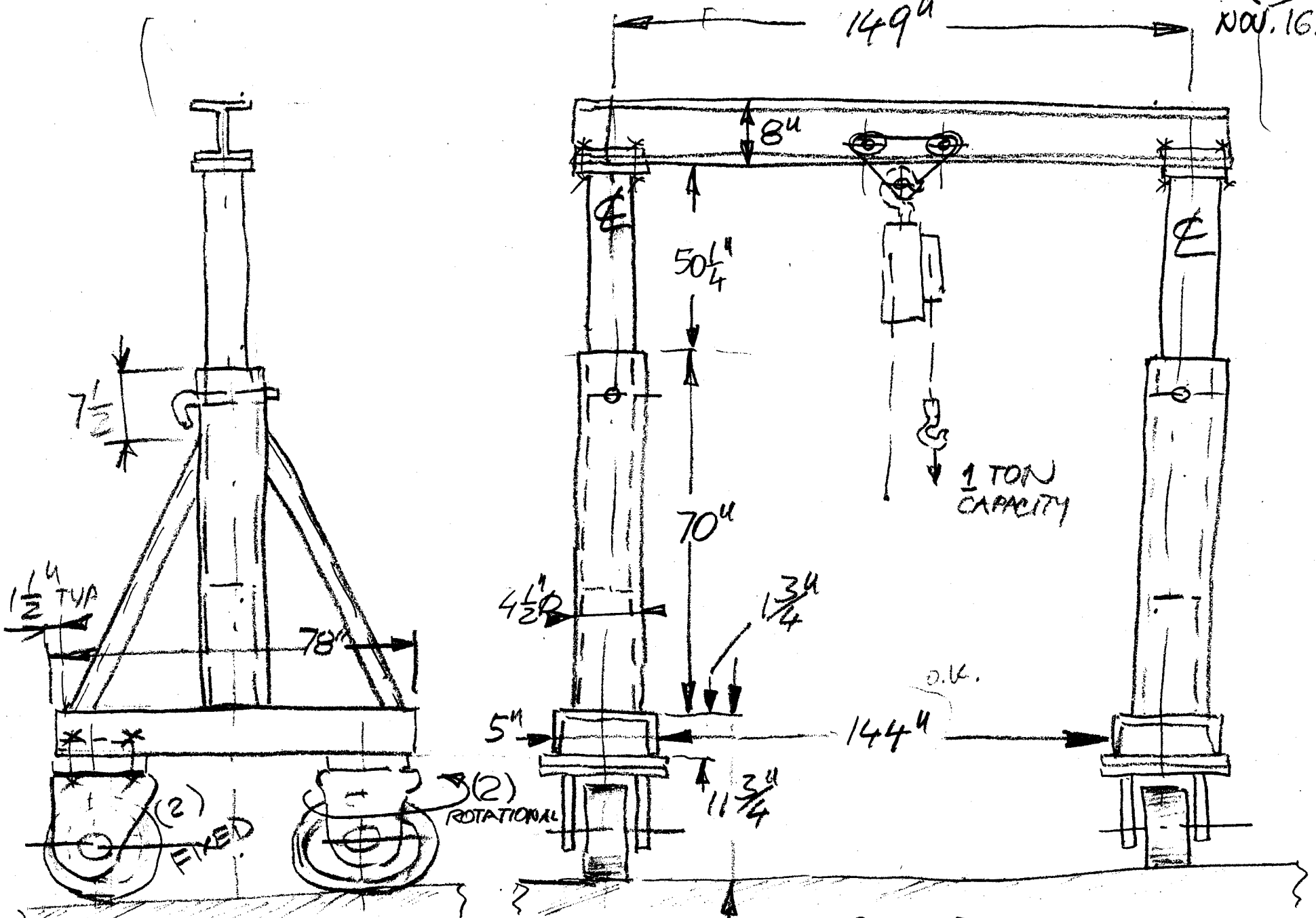

SKETCH: ASZ 11.16.04

MC-8 LOCATION

1 TON CAPACITY GANTRY — NL 1037 CRANE BLDG. NMS

1lbubblechgantry1.jpg

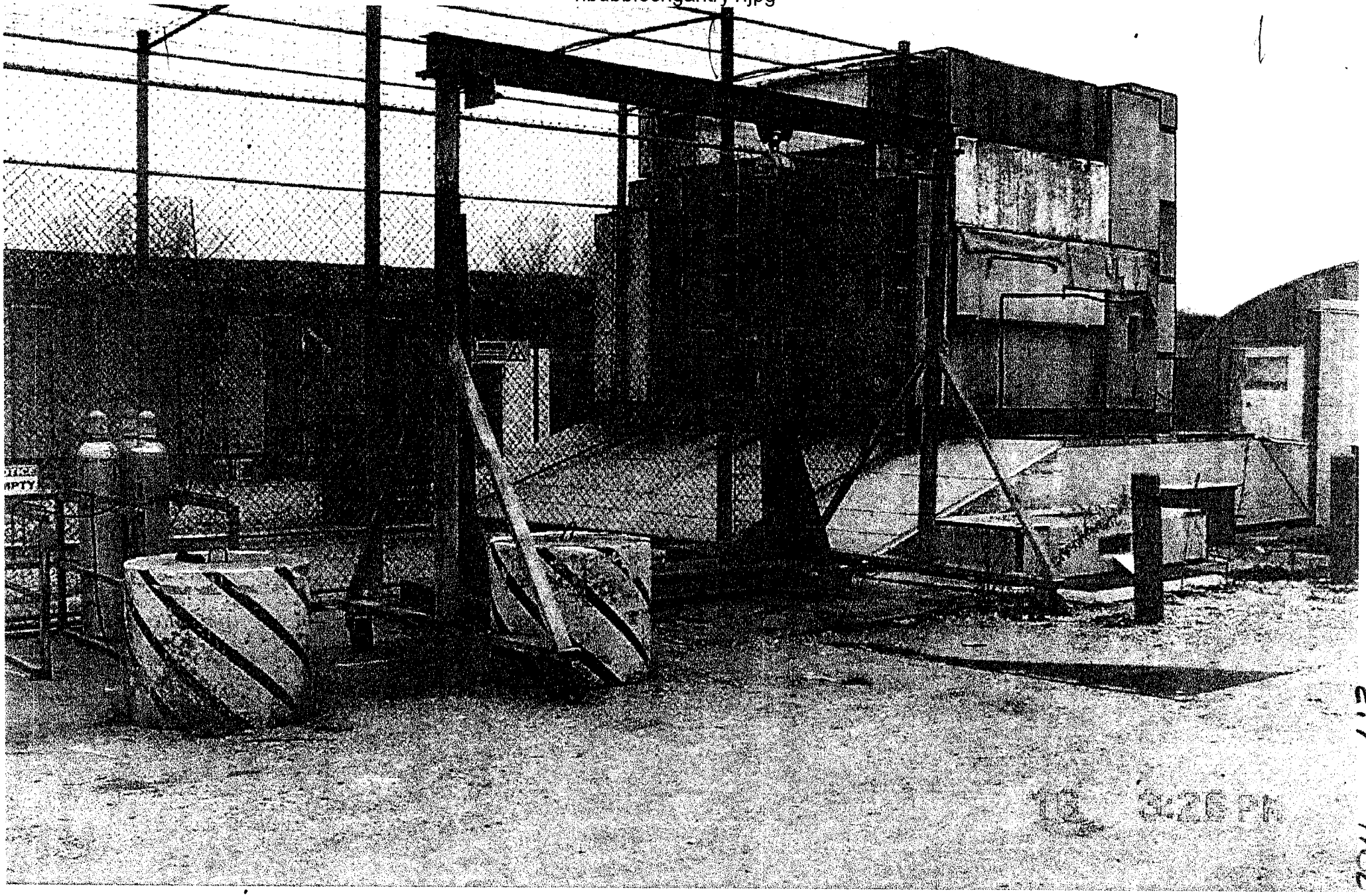

2.7 PAGE 12

1literbubblec. _ ntry2.jpg

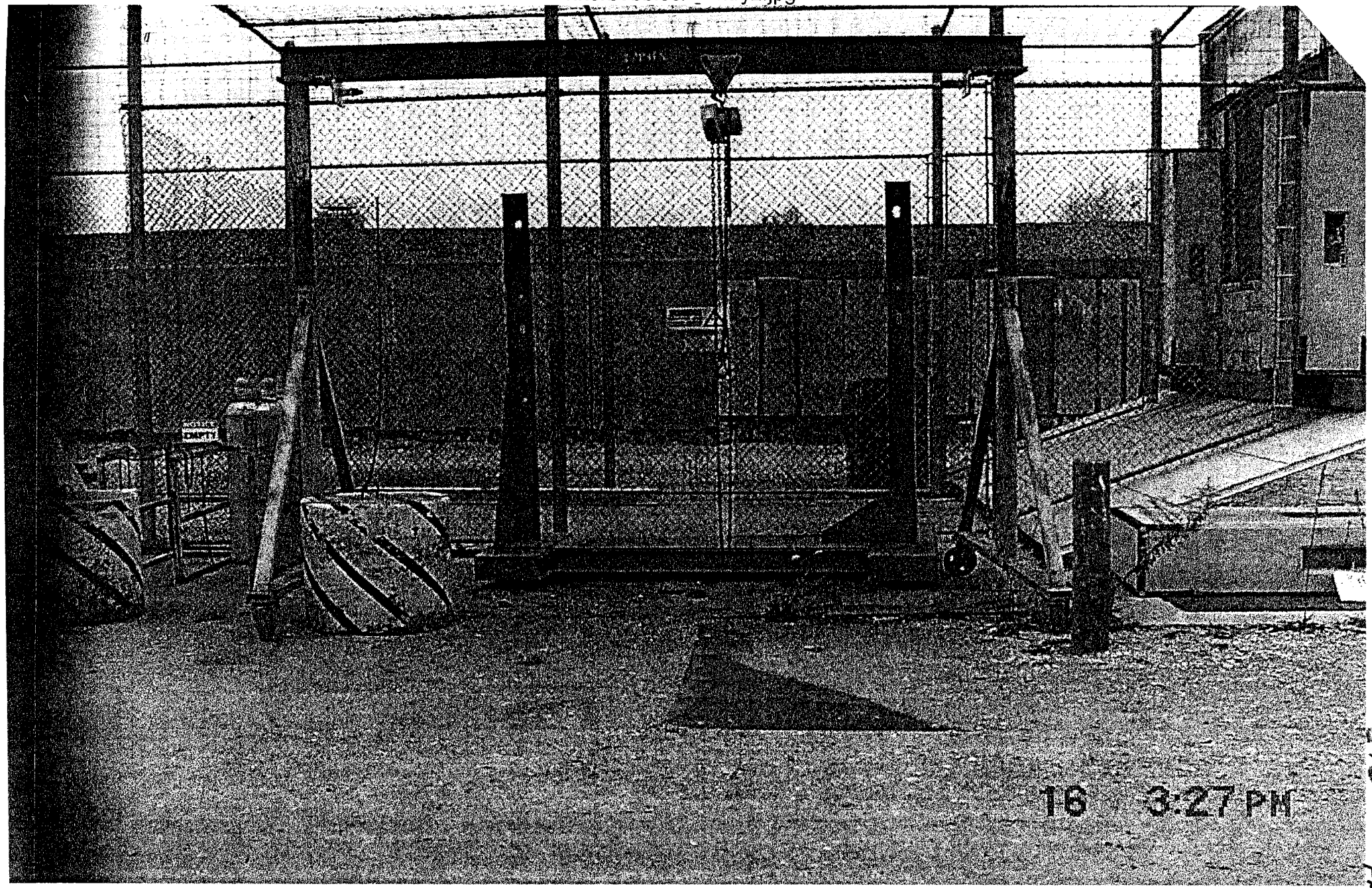

FIG 13 PAGE 13

C:\Documents and Settings\szymulanski\Desktop\

ITEM	QTY	DESCRIPTION	MAT'L
1	1	12" SCH 40S PIPE (.375 WALL) x 24" LG	SA-312 TP304
2	1	12" CL300 RAISED FACE SLIP ON FLANGE	SA-182 F304
3	4	6" CL300 RFSO FLANGES- HUBS REMOVED	SA-182 F304
4	1	3" CL300 RFSO FLANGE- HUB REMOVED	SA-182 F304
5	4	6" SCH 40 PIPE (.280" WALL) X 3 1/2"LG	SA-312 TP304
6	1	3" SCH 40 PIPE (.216" WALL) X 2 5/8" LG	SA-312 TP304
7	2	1/2"OD TUBE x .083" WALL x 4" LG	SA-213 TP304
8	4	1/2" TUBE SOCKET WELD UNION- SWAGELOK SS-810-6-8W	316 SS
9	4	1/2" NUT/FERRULE SETS- SWAGELOK SS-810-NFSET	316 SS
10	4	2" x 2" x 1/4" ANGLE x 13.75"LG	304 SS
11	4	1/2" PLATE x 4" x 4"	SA-240 TP304

NOTES:

1. REMOVE HUBS FROM BACK OF 5 FLANGES BEFORE WELDING AS SHOWN.
2. ALL WELDING TO BE PERFORMED BY CODE-QUALIFIED WELDERS USING WPS GTAW-SS FOR ROOT PASSES AND WHERE APPLICABLE, WPS GMAW-SS FOR COVER PASSES.
3. PASSIVATE AFTER WELDING.

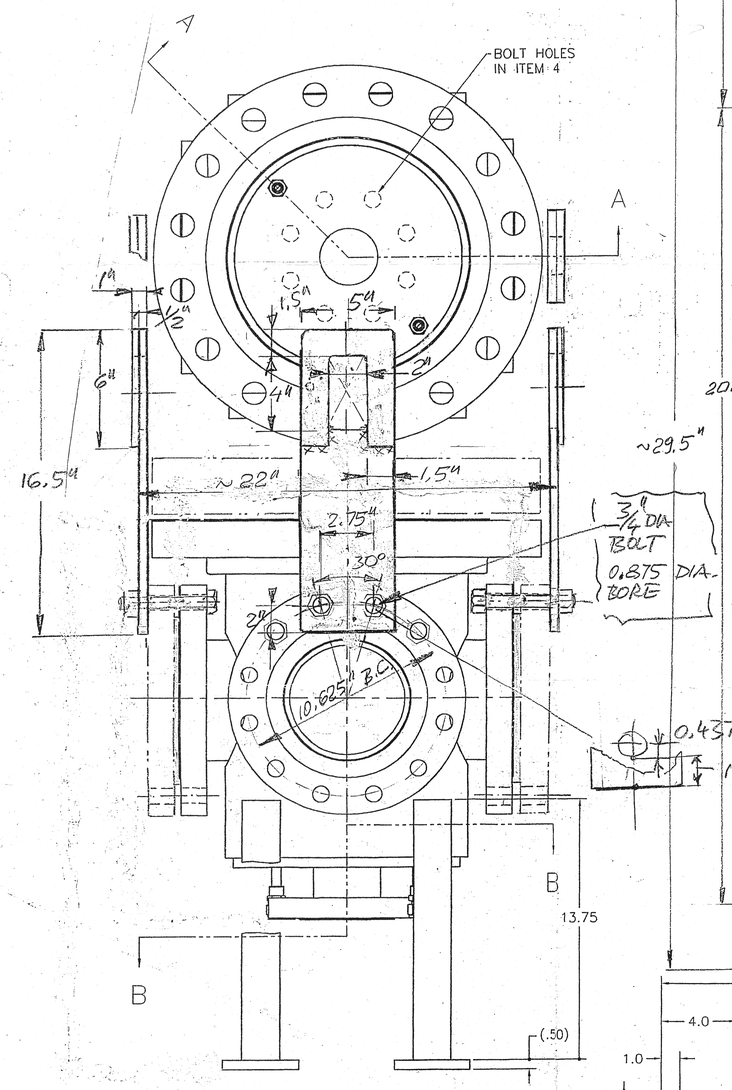

ASSEMBLY A

1 RQD

LIFTING EARS

DETAIL DWG.: SKETCH asz 12.21.04

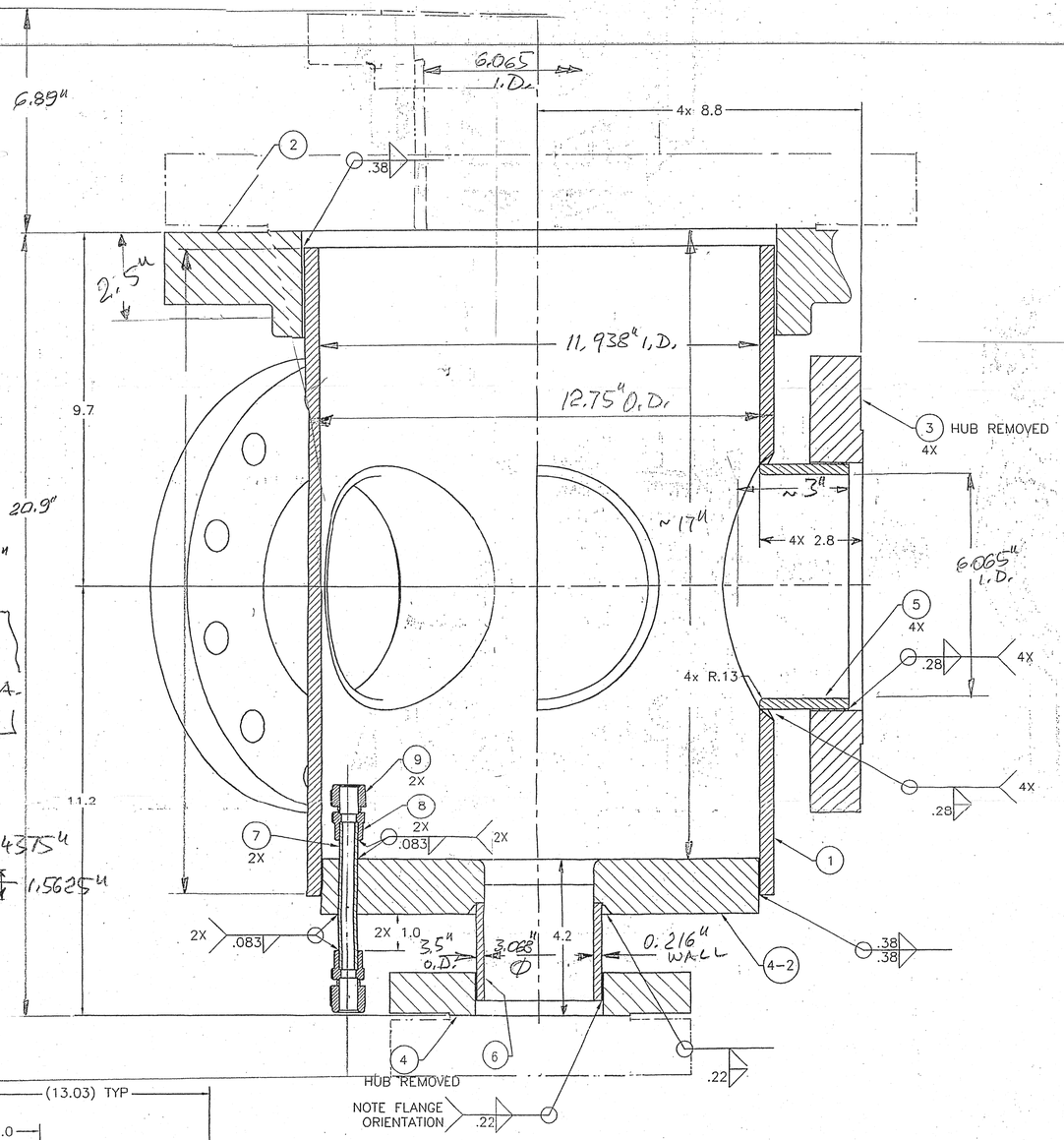

SECTION A-A

HALF-SCALE

LEGS NOT SHOWN

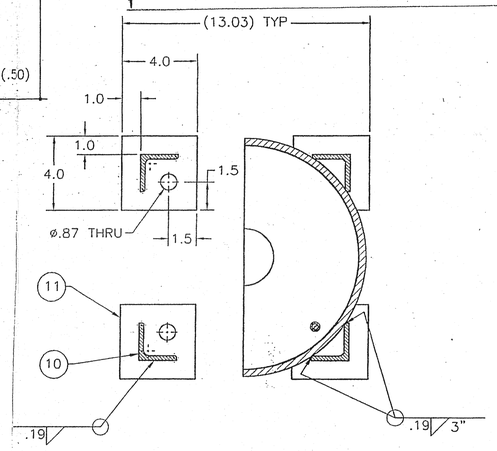

SECTION B-B

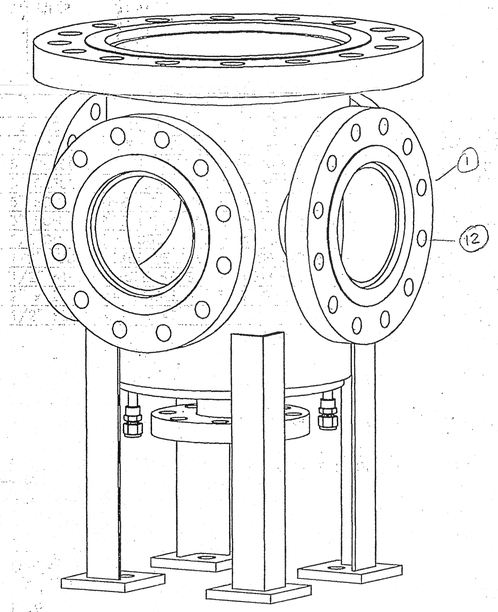

REV.	DESCRIPTION	BY	CHK'D

UNLESS NOTED OTHERWISE DIMENSIONS IN INCHES

TOLERANCES

FRACT. ± 1/16
.X± .03
.XX± .01
.XXX± .005
ANGLES± 1Deg

MTM
Meyer Tool & Mfg., Inc.

BY: CME 1/9/04 | CHK'D: RDE 1/12/04

600 PSI BUBBLE CHAMBER OUTER VESSEL
VESSEL WELDMENT

THIS DRAWING AND DESIGN IS THE PROPERTY OF MEYER TOOL AND MFG. CO. UNAUTHORIZED USE OR REPRODUCTION IS STRICTLY PROHIBITED.

SCALE	CUSTOMER	JOB NO.	DWG.	SIZE: D
1:4	U OF CHICAGO	01013	02	REV. 0

1:2

SKETCH: asz 12.17.04

300 lb. FLANGES

STANDARD ANSI B16.5

1. All dimensions are in inches.
2. Material most commonly used, forged steel SA 181. Available also in stainless steel, alloy steel and non-ferrous metal.
3. The 1/16 in. raised face is included in dimensions C, D and J.
4. The lengths of stud bolts do not include the height of crown.
5. Bolt holes are 1/8 in. larger than bolt diameters.
6. Flanges bored to dimensions shown unless otherwise specified.
7. Flanges for pipe sizes 22, 26, 28 and 30 are not covered by ANSI B16.5.

SEE FACING PAGE FOR DIMENSION K AND DATA ON BOLTING.

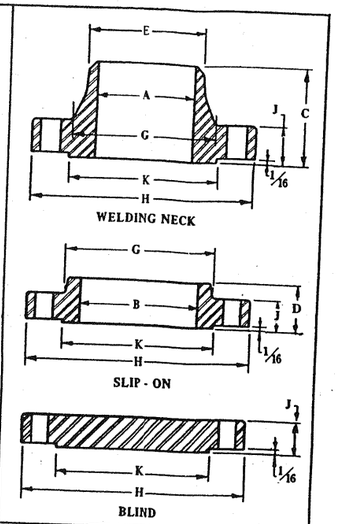

Nominal Pipe Size	Diameter of Bore		Length Through Hub		Diameter of Hub at Point of Welding	Diameter of Hub at Base	Outside Diameter of Flange	Thickness of Flange
	A	B	C	D	E	G	H	J
½	.62	.88	2 1/16	⅞	.84	1½	3¾	9/16
¾	.82	1.09	2¼	1	1.05	1⅞	4⅝	⅝
1	1.05	1.36	2 7/16	1 1/16	1.32	2⅛	4⅞	11/16
1¼	1.38	1.70	2 9/16	1 1/16	1.66	2½	5¼	¾
1½	1.61	1.95	2 11/16	1 3/16	1.90	2¾	6⅛	13/16
2	2.07	2.44	2¾	1 5/16	2.38	3 5/16	6½	⅞
2½	2.47	2.94	3	1½	2.88	3 15/16	7½	1
3	3.07	3.57	3⅛	1 11/16	3.50	4⅝	8¼	1⅛
3½	3.55	4.07	3 3/16	1¾	4.00	5¼	9	1 3/16
4	4.03	4.57	3⅜	1⅞	4.50	5¾	10	1¼
5	5.05	5.66	3⅞	2	5.56	7	11	1⅜
6	6.07	6.72	3⅞	2 1/16	6.63	8⅛	12½	1 7/16
8	7.98	8.72	4⅜	2 7/16	8.63	10¼	15	1⅝
10	10.02	10.88	4⅝	2⅝	10.75	12⅝	17½	1⅞
12	12.00	12.88	5⅛	2⅞	12.75	14¾	20½	2
14	13.25	14.14	5⅝	3	14.00	16¾	23	2⅛
16	15.25	16.16	5¾	3¼	16.00	19	25½	2¼
18	17.25	18.18	6¼	3½	18.00	21	28	2⅜
20	19.25	20.20	6⅜	3¾	20.00	23⅛	30½	2½
22	21.25	22.22	6½	4	22.00	25¼	33	2⅝
24	23.25	24.25	6⅝	4 3/16	24.00	27⅝	36	2¾
26	To be specified	26.25	7¼	7¼	26¼	28⅜	38¼	3⅛
28		28.25	7¾	7¾	28¼	30½	40¾	3⅜
30		30.25	8¼	8¼	30¼	32 9/16	43	3⅝

1.4375

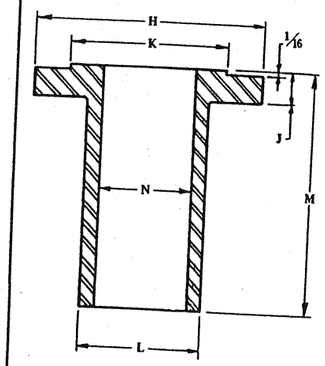

300 lb. LONG WELDING NECK

1. All dimensions are in inches.
2. Material most commonly used, forged steel SA 181. Available also in stainless steel, alloy steel and non-ferrous metal.
3. The 1/16 in. raised face is included in dimensions J and M.
4. The length of bolts do not include the height of crown.
5. Bolt holes are 1/8 in. larger than bolt diameters.
6. Dimensions, M (length of welding necks) are based on data of major manufacturers. Long welding necks with necks longer than listed are available on special order.

SEE FACING PAGE FOR DIMENSION J.

Outside Diameter of Raised Face	No. of Holes	Diam. of Bolts	Bolt Circle	Length of Bolts		Outside Diameter	Length	Diameter of Bore	Nominal Pipe Size
				1/16 Raised Face	Ring Joint				
K						L	M	N	
1⅜	4	½	2⅝	2¾	3				½
1 11/16	4	⅝	3¼	3	3½				¾
2	4	⅝	3½	3¼	3¾	2⅛			1
2½	4	⅝	3⅞	3¼	3¾	2½			1¼
2⅞	4	¾	4½	3¾	4¼	2¾			1½
3⅝	8	⅝	5	3½	4¼	3 5/16	9		2
4⅛	8	¾	5⅞	4	4¾	3 15/16			2½
5	8	¾	6⅝	4¼	5	4⅝			3
5½	8	¾	7¼	4½	5¼	5¼			3½
6 3/16	8	¾	7⅞	4½	5¼				4
7 5/16	8	¾	9¼	4¾	5½	5¾			5
8½	12	¾	10⅝	5	5¾	7			6
10⅝	12	⅞	13	5½	6¼	8⅛	12	Same as nominal pipe size	8
12¾	16	1	15¼	6¼	7	10¼			10
15	16	1⅛	17¾	6¾	7½	12⅝			12
16¼	20	1⅛	20¼	7	7¾	14¾			14
18½	20	1¼	22½	7½	8¼	16¾			16
21	24	1¼	24¾	7¾	8½	19			18
23	24	1¼	27	8¼	9	21			20
25¼	24	1½	29¼	8¾	9¾	23⅛			22
27¼	24	1½	32	9¼	10¼	27⅝	10-14		24
29½	28	1⅝	34½	10	11	29½			26
31½	28	1⅝	37	10½	11½	31½			28
33¾	28	1¾	39¼	11¼	12¼	33¾			30

ITEM 3. ON SKETCH: ASZ 12.17.04

3. COMPUTATIONS

3.0 LOAD SCHEMATIC FIG. 1

3.1 DETERMINE THE LEVEL OF GOVERNING STRESSES IN LIFTING EARS

GIVEN DATA:

WEIGHT OF THE INSTALLATION ASSEMBLY: 1499 [lbs] *

* PRESSURE VESSEL ENGINEERIN NOTE PER CHAPTER 5031

FOR: 1 LITER BUBBLE CHAMBER — OUTER VESSEL

3.2 —

3.3 IMPACT LOAD CASE

3.4 HAZARD ANALYSIS - CASE WITH INADEQUATE TORQUING OF UPPER (2) 3/4" BOLTS - FIG. 1

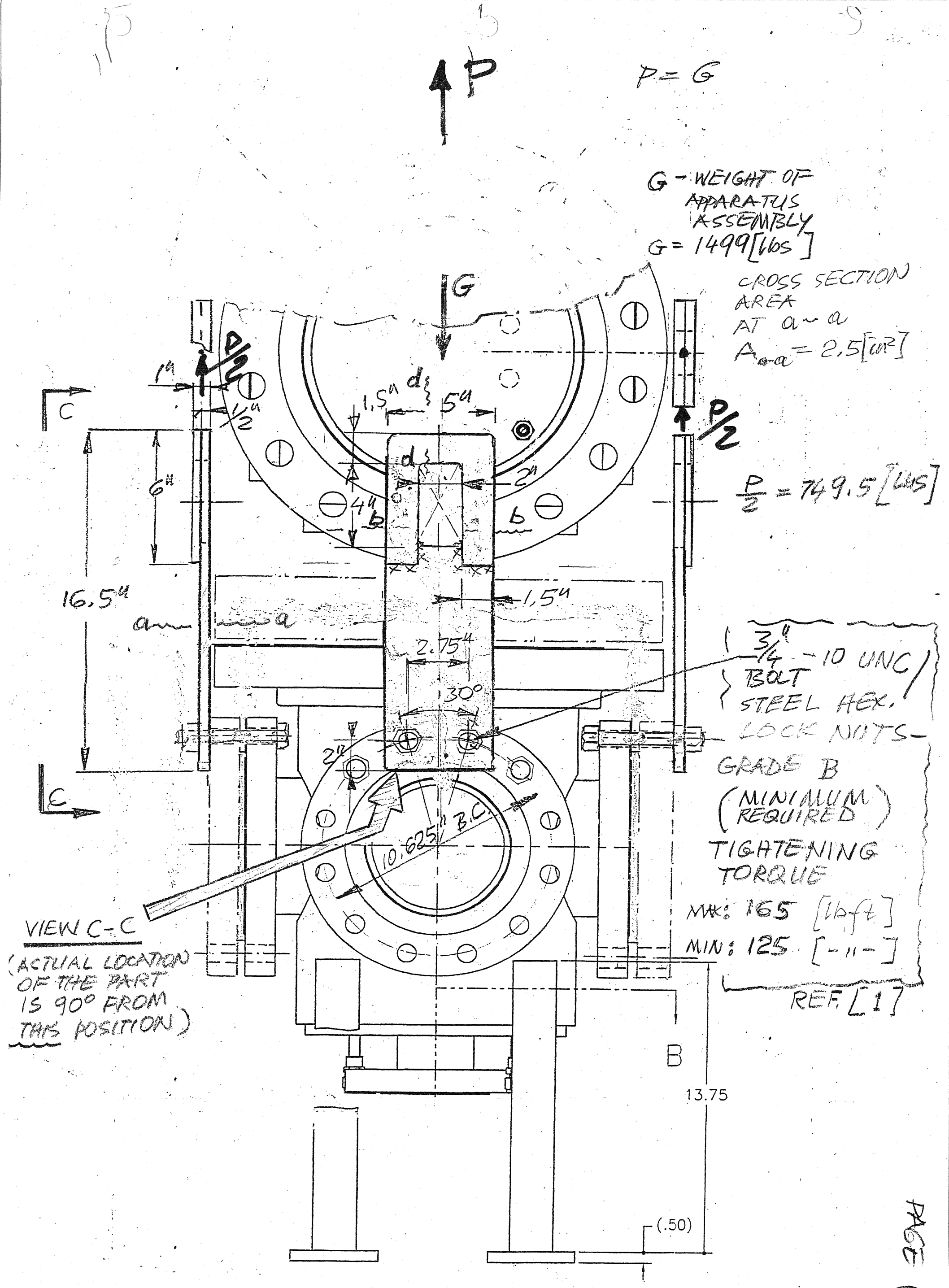

FIG 1

3.0 LOAD SCHEMATIC

PART OF A SKETCH: ASZ 12.17.04

REF. [1]

PAGE 18

TABLE 1-3 Suggested Tightening-Torque Values for Nonferrous Threaded Fasteners

This table is offered as the suggested maximum torquing values for threaded products and is only a guide. Actual tests were conducted on dry, or near-dry, products. Mating parts were wiped clean of chips and foreign matter. A lubricated bolt requires less torque to attain the same clamping force as a nonlubricated bolt.

All values shown on chart except for nylon represent a safe working torque; in the case of nylon only, the figures represent breaking torque.

Bolt size	18–8 stainless steel	Brass	Silicon bronze	Aluminum 2024-T4	316 stainless steel	Monel	Nylon
	VALUES IN POUND-INCHES						
2-56	2.5	2.0	2.3	1.4	2.6	2.5	0.44
2-64	3.0	2.5	2.8	1.7	3.2	3.1	
3-48	3.9	3.2	3.6	2.1	4.0	4.0	
3-56	4.4	3.6	4.1	2.4	4.6	4.5	
4-40	5.2	4.3	4.8	2.9	5.5	5.3	1.19
4-48	6.6	5.4	6.1	3.6	6.9	6.7	
5-40	7.7	6.3	7.1	4.2	8.1	7.8	
5-44	9.4	7.7	8.7	5.1	9.8	9.6	
6-32	9.6	7.9	8.9	5.3	10.1	9.8	2.14
6-40	12.1	9.9	11.2	6.6	12.7	12.3	
8-32	19.8	16.2	18.4	10.8	20.7	20.2	4.3
8-36	22.0	18.0	20.4	12.0	23.0	22.4	
10-24	22.8	18.6	21.2	13.8	23.8	25.9	6.61
10-32	31.7	25.9	29.3	19.2	33.1	34.9	8.2
1/4"-20	75.2	61.5	68.8	45.6	78.8	85.3	16.0
1/4"-28	94.0	77.0	87.0	57.0	99.0	106.0	20.8
5/16"-18	132	107	123	80	138	149	34.9
5/16"-24	142	116	131	86	147	160	
3/8"-16	236	192	219	143	247	266	
3/8"-24	259	212	240	157	271	294	
7/16"-14	376	317	349	228	393	427	
7/16"-20	400	327	371	242	418	451	
1/2"-13	517	422	480	313	542	584	
1/2"-20	541	443	502	328	565	613	
9/16"-12	682	558	632	413	713	774	
9/16"-18	752	615	697	456	787	855	
5/8"-11	1110	907	1030	715	1160	1330	
5/8"-18	1244	1016	1154	798	1301	1482	
3/4"-10	1530	1249	1416	980	1582	1832	
3/4"-16	1490	1220	1382	958	1558	1790	
7/8"-9	2328	1905	2140	1495	2430	2775	
7/8"-14	2318	1895	2130	1490	2420	2755	
1"-8	3440	2815	3185	2205	3595	4130	
1"-14	3110	2545	2885	1995	3250	3730	
	VALUES IN POUND-FEET						
1 1/8"-7	413	337	383	265	432	499	
1 1/8"-12	390	318	361	251	408	470	
1 1/4"-7	523	428	485	336	546	627	
1 1/4"-12	480	394	447	308	504	575	
1 1/2"-6	888	727	822	570	930	1064	
1 1/2"-12	703	575	651	450	732	840	

Reprinted by permission of ITT Harper

TABLE 1-4 Suggested Locknut Tightening-Torque Values for Use with Standard Series Bolts

Locknut size and threads per inch	Steel hex locknuts: Grade B locknuts: Clamp load, lb*	Locknut tightening torque‡ Max	Locknut tightening torque‡ Min	Grade C locknuts: Clamp load, lb†	Locknut tightening torque‡ Max	Locknut tightening torque‡ Min	Steel hex flange locknuts: Grade F locknuts: Clamp load, lb*	Locknut tightening torque‡ Max	Locknut tightening torque‡ Min	Grade G locknuts: Clamp load, lb†	Locknut tightening torque‡ Max	Locknut tightening torque‡ Min
	COARSE-THREAD SERIES											
1/4-20	2,000	85	60	2,850	125	85	2,000	95	65	2,850	150	100
5/16-18	3,350	150	110	4,700	190	130	3,350	180	120	4,700	240	155
3/8-16	4,950	20	14.5	6,950	28	20	4,950	26	16	6,950	32	21
7/16-14	6,800	32	23	9,600	43	31	6,800	42	28	9,600	51	34
1/2-13	9,050	50	37	12,800	62.5	45	9,050	57	38	12,800	85	55
9/16-12	11,600	70	50	16,400	95	70	11,600	85	55	16,400	120	80
5/8-11	14,500	95	70	20,300	122.5	90	14,500	112	75	20,300	143	95
3/4-10	21,300	165	125	30,100	210	155	21,300	152	102	30,100	240	160
7/8-9	29,500	250	185	41,600	312.5	225						
1-8	38,700	375	275	54,600	462.5	350						
	FINE-THREAD SERIES											
1/4-28	2,300	90	65	3,250	125	85	2,300	115	75	3,250	160	105
5/16-24	3,700	160	120	5,200	200	140	3,700	200	130	5,200	230	155
3/8-24	5,600	22	16	7,900	29	21	5,600	25	17	7,900	33	22
7/16-20	7,550	34	24	10,700	43	31	7,550	45	30	10,700	60	40
1/2-20	10,200	52.5	37.5	14,400	70	50	10,200	66	44	14,400	89	59
9/16-18	13,000	77.5	57.5	18,300	95	70	13,000	94	62	18,300	132	88
5/8-18	16,300	97.5	72.5	23,000	125	90	16,300	120	80	23,000	175	115
3/4-16	23,800	165	120	33,600	210	155	23,800	192	128	33,600	270	170
7/8-14	32,400	270	200	45,800	312.5	225						
1-14	43,300	400	300	61,100	500	362.5						

* Clamp loads for Grade B and Grade F locknuts equal 75% of the proof loads specified for SAE J429 Grade 5 and ASTM A449 bolts.

† Clamp loads for Grade C and Grade G locknuts equal 75% of the proof loads specified for SAE J429 Grade 8 and ASTM A354 Grade BD bolts.

‡ Torque values for 1/4- and 5/16-in. sizes are in lb-in. All other torque values are in lb-ft.

SOURCE: The Industrial Fasteners Institute.

ening torque requirements can be noted based on K factors of .20 and .15. The torque coefficient of .20 is an estimate for unlubricated and dry fasteners, while the coefficient of .15 approximates a plated finish. The use of additional lubricants such as oil, MIL-T-5544 graphite grease, waxes, etc., can vary the K factor from 0.07 to .30. For specific design applications with exacting preload control requirements, it may be necessary to test and evaluate the specific bolts and nuts intended for the design application to define necessary installation-torque values.

Suggested tightening-torque values for nonferrous threaded fasteners are noted in Table 1-3. Suggested locknut tightening-torque values for use with standard series bolts are noted in Table 1-4. As with all previous discussion concerning torque-tension properties, these values are intended as guidelines. It is recommended that they be substantiated for particular design joints.

1-19 Turn-of-the-Nut Method Under field service conditions, when torque wrenches are not available, an alternate technique has been employed for tightening to develop preload. This system requires the nut to be seated to a finger-tight condition. From this position, the nut is subjected to an additional turn to induce preload. The amount of the turn required will vary with bolt diameter, thread series, bolt length, etc., and will usually be specified for the fastener system. The technique should be considered as a less exact substitute for calibrated equipment. The system requires sensitive determination of the snug-tight position of the nut. It is not considered applicable where self-locking nuts are used since the finger-tight condition is difficult to determine.

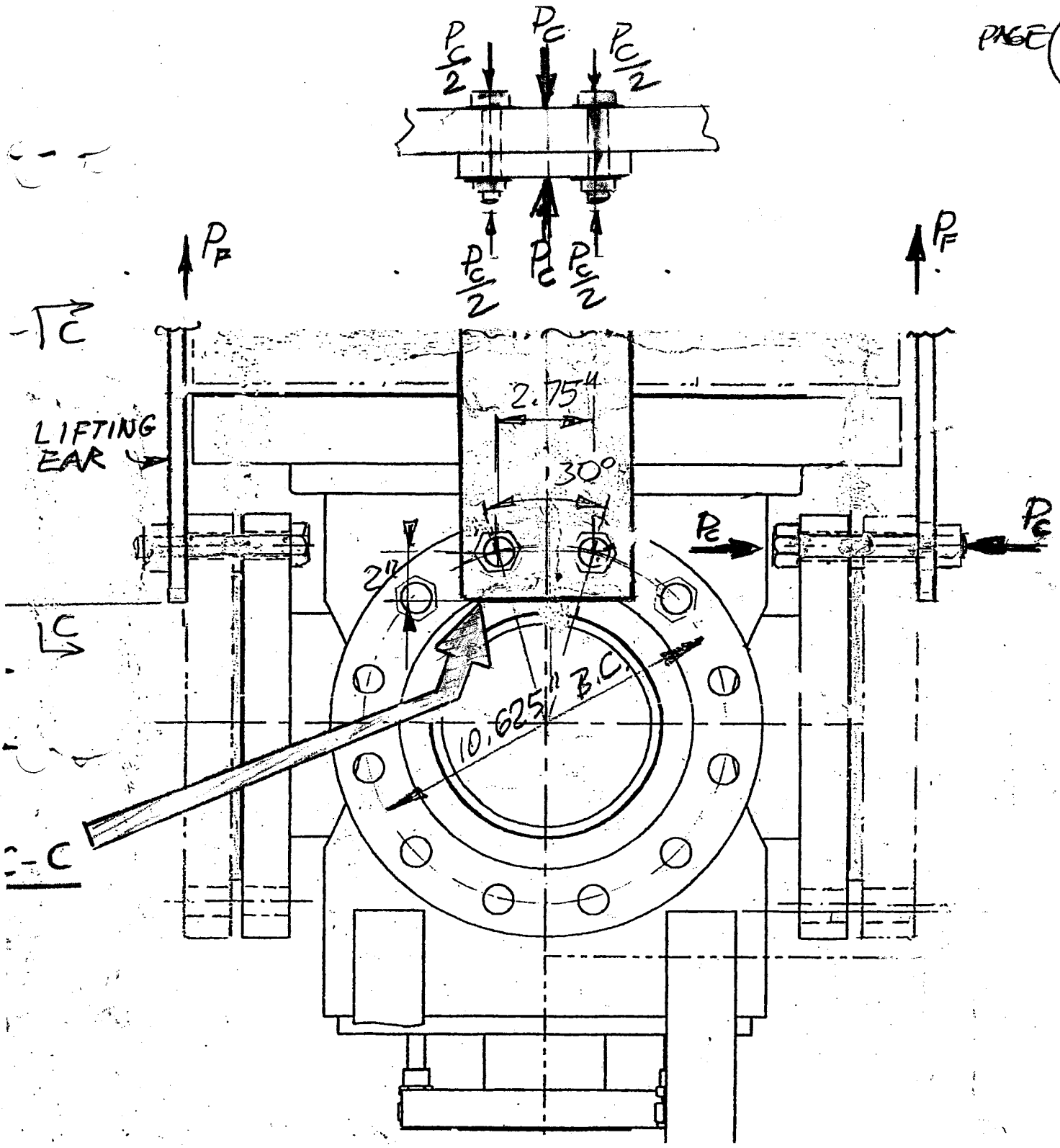

P_C CLAMP LOAD

$\frac{P_C}{2} = 21{,}300$ [lbs] (FOR GRADE B LOCKNUTS)

$P_C = \underline{42{,}600}$ [lbs]

P_F – RESULTANT FRICTION FORCE BETWEEN LIFTING EAR SURFACE AND THE SURFACE OF A FLANGE

$P_F = \mu (P_F)$

μ = COEFFICIENT OF STATIC FRICTION: STEEL/STEEL – DRY

$\mu = 0.15$ REF. [2] PAGE 102

$P_F = 0.15 (42,600)$

$P_F = 6390$ [lbs]

$P_F > \frac{P}{2}$

O.K.

3.1.1 DETERMINE THE STRESS LEVEL IN SECTION $\alpha - a$ [FIG. 1]

$\sigma_\alpha = \frac{P/2}{A_a}$

$P/2 = 749.5$ [lbs]

A_a – CROSS SECTION AREA OF THE LIFTING EAR

$A_a = 5 \times 0.5 = 2.5$

$\sigma_a = \frac{749.5}{2.5}$

$\sigma_a = 299.8$ [psi]

O.K.

3.1.2 DETERMINE THE STRESS LEVEL IN SECTION b-b, FIG [1]

$$\sigma_b = \frac{P/2}{A_b}$$

A_b - CROSS SECTION AREA AT PLANE b-b.

$$A_b = (1.5 \times 0.5) \times 2$$

$$A_b = 1.5 \ [in^2]$$

$$\sigma_b = \frac{749.5}{1.5}$$

$$\sigma_b = 499.6 \ [psi]$$

O.K.

3.1.3 DETERMINE THE SHEAR STRESS IN PLANE d-d, FIG. [1]

$$\sigma_d = \frac{P/2}{A_d}$$

$$A_d = 1.5(0.5)$$

$$A_d = 0.75 [in^2]$$

$$\sigma_d = \frac{749.5}{0.75} =$$

$$\sigma_d = 999.3 \ [psi]$$

O.K.

FERMILAB
ENGINEERING NOTE

SECTION	PROJECT	SERIAL-CATEGORY	PAGE
			22

SUBJECT: 1 LITER BUBBLE CHAMBER INSTALLATION IN THE "MINOS" DETECTOR HALL

NAME: A. SZYMULANSKI x4870

DATE:

REVISION DATE:

LIFTING EAR

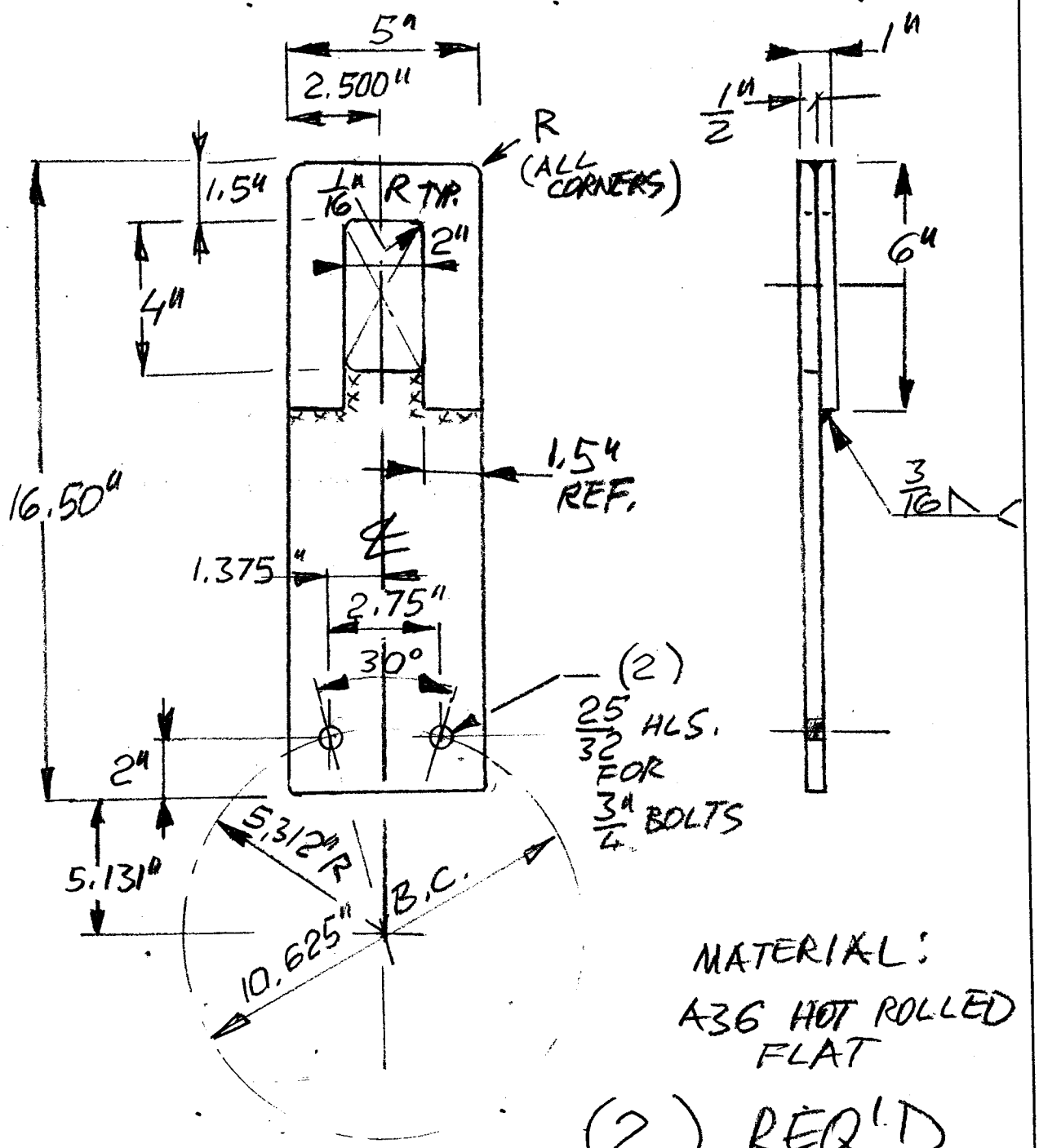

MATERIAL:
A36 HOT ROLLED FLAT

(2) REQ'D

CAPACITY
1.5 TON

SKETCH ASZ 12.21.04

3.3 IMPACT LOAD CASE

IT IS ASSUMED THAT THE STRESS INCREASE MAY REACHED TWICE, THE LEVEL OF A STATIC MAXIMUM.

IN THIS CASE;

$$\sigma = 999.3 \times 2$$

$$\sigma = 1998.6 \text{ [psi]}$$

THE BASE FOR THIS ASSUMPTION IS DERIVING FROM: REF [3] *

REF. [3]
R.J. ROARK, W.C. YOUNG.
SEVENTH EDITION

original dimensions, becomes equal to the ultimate tensile strength of the material as determined by a conventional test. On the other hand, some materials fail at values of σ_a as low as 61.5% of the ultimate strength, and the lowest values have been observed in tests of solid disks. The ratio of σ_a at failure to the ultimate strength does not appear to be related in any consistent way to the ductility of the material; it seems probable that it depends on the form of the stress-strain diagram. In none of the tests reported did the weakening effect of a central hole prove to be nearly as great as the formulas for elastic stress would seem to indicate.

15.3 Impact and Sudden Loading

When a force is suddenly applied to an elastic body (as by a blow), a wave of stress is propagated, which travels through the body with a velocity

$$V = \sqrt{\frac{gE}{\delta}} \tag{16}$$

where E is the modulus of elasticity of the material and δ is the weight of the material per unit volume.

Bar with free ends. When one end of an unsupported uniform elastic bar is subjected to longitudinal impact from a rigid body moving with velocity v, a wave of compressive stress of intensity

$$\sigma = \frac{v}{V}E = v\sqrt{\frac{\delta E}{g}} \tag{17}$$

is propagated. The intensity of stress is seen to be independent of the mass of the moving body, but the length of the stressed zone, or volume of material simultaneously subjected to this stress, does depend on the mass of the moving body. If this mass is infinite (or very large compared with that of the bar), the wave of compression is reflected back from the free end of the bar as a wave of tension and returns to the struck end after a period $t_1 = 2L/V$ s, where L is the length of the bar and the period t_1 is the duration of contact between bar and body.

If the impinging body is very large compared with the bar (so that its mass may be considered infinite), the bar, after breaking contact, moves with a velocity $2v$ in the direction of the impact and is free of stress. If the mass of the impinging body is μ times the mass of the bar, the average velocity of the bar after contact is broken is

$$\mu v(1 - e^{-2/\mu})$$

and it is left vibrating with a stress of intensity

$$\sigma = \frac{v}{V}E\,e^{-\beta t_1}$$

where $\beta = A\sqrt{\delta E g}/W$, A being the section area of the bar and W the weight of the moving body.

Bar with one end fixed. If one end of a bar is fixed, the wave of compressive stress resulting from impact on the free end is reflected back unchanged from the fixed end and combines with advancing waves to produce a maximum stress very nearly equal to

$$\text{Max}\ \sigma = \frac{v}{V}E\left(1 + \sqrt{\mu + \frac{2}{3}}\right) \tag{18}$$

where, as before, μ denotes the ratio of the mass of the moving body to the mass of the bar. The total time of contact is approximately

$$t_1 = \frac{L}{V}\left[\pi\sqrt{\mu + \frac{1}{2}} - \frac{1}{2}\right] \text{s}$$

[The above formulas are taken from the paper by Donnell (Ref. 5); see also Ref. 17.]

Sudden loading. If a dead load is suddenly transferred to the free end of a bar, the other end being fixed, the resulting state of stress is characterized by waves, as in the case of impact. The space-average value of the pull exerted by the bar on the load is not half the maximum tension, as is usually assumed, but is somewhat greater than that, and therefore the maximum stress that results from sudden loading is somewhat less than twice that which results from static loading. Love (Ref. 6) shows that if μ (the ratio of the mass of the load to that of the bar) is 1, sudden loading causes 1.63 times as much stress as static loading; for $\mu = 2$, the ratio is 1.68; for $\mu = 4$, it is 1.84; and it approaches 2 as a limit as μ increases. It can be seen that the ordinary assumption that sudden loading causes twice as much stress and deflection as static loading is always a safe one to make.

Moving load on beam. If a constant *force* moves at uniform speed across a beam with simply supported ends, the maximum deflection produced exceeds the static deflection that the same force would produce. If v represents the velocity of the force, l the span, and ω the lowest natural vibration frequency of the (unloaded) beam, then theoretically the maximum value of the ratio of dynamic to static deflection is 1.74; it occurs for $v = \omega l/1.64\pi$ and at the instant when the force has progressed a distance $0.757l$ along the span (Refs. 15 and 16).

FERMILAB ENGINEERING NOTE
SECTION
PROJECT
SERIAL-CATEGORY
PAGE 24

PAGE 25

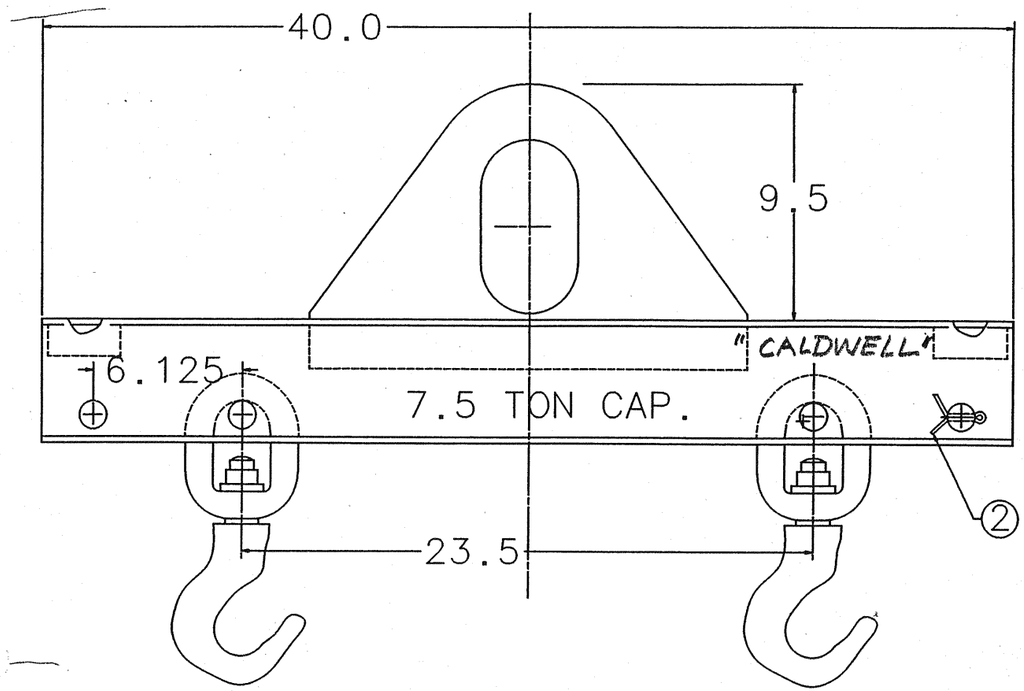

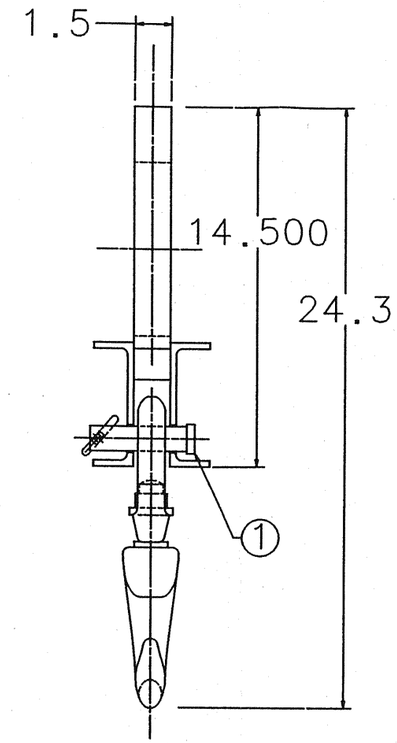

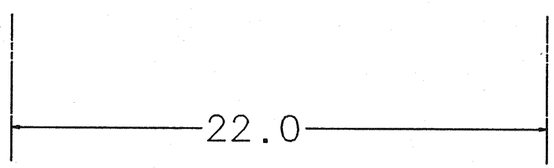

NOMINAL SLINGS SPACING

ITEM No		Qty
2	0.283" DIA. COTTER PIN	4
1	1" DIA PIN X 4.28" LG.	4

EXISTING LIFTING FIXTURE
(STORED AT MI 8)

ENG. SPEC.
NO: ES 294414

FERMI NATIONAL ACCELERATOR LABORATORY
UNITED STATES DEPARTMENT OF ENERGY

LIFTING FIXTURE
CAPACITY 7.5 TON

SKETCHgsz12.28.04

3.4 HAZARD ANALYSIS – CASE WITH INADEQUATE TORQUING OF UPPER (2) 3/4" BOLTS – FIG 1.

THE SHEARING OF A BOLT WILL BE THE GOVERNING STRESS.

REF. [1]

TABLE 1-8 Tensile Stress Areas and Threads per Inch

PRODUCT SIZE DIA. in.	COARSE THREAD		FINE THREAD	
	STRESS AREA, sq in.	THREADS per in.	STRESS AREA, sq in.	THREADS per in.
6	0.00909	32	0.01015	40
8	0.0140	32	0.01474	36
10	0.0175	24	0.0200	32
12	0.0242	24	0.0258	28
1/4	0.0318	20	0.0364	28
5/16	0.0524	18	0.0580	24
3/8	0.0775	16	0.0878	24
7/16	0.1063	14	0.1187	20
1/2	0.1419	13	0.1599	20
9/16	0.1820	12	0.2030	18
5/8	0.2260	11	0.2560	18
3/4	0.3340	10	0.3730	16
7/8	0.4620	9	0.5090	14
1	0.6060	8	0.6630	12
1-1/8	0.7630	7	0.8560	12
1-1/4	0.9690	7	1.0730	12
1-3/8	1.1550	6	1.3150	12
1-1/2	1.4050	6	1.5810	12

Tensile stress areas are computed using the following formula:

$$A_s = 0.7854 \left[D - \frac{0.9743}{n}\right]^2$$

Where A_s = tensile stress area in square inches

D = nominal size (basic major diameter) in inches

n = number of threads per inch

SOURCE: Industrial Fasteners Institute.

$$\tau = \frac{\frac{P}{2}}{2A}$$

WHERE;

$$\frac{P}{2} = \frac{1499}{2} = 749.5 \text{ [lbs]}$$

$$A = 0.334 \text{ [in}^2\text{]}$$

τ – SHEAR STRESS

$$\tau = \frac{749.5}{2(0.334)} = \underline{1122.0} \text{ [psi]}$$

CONSIDERING "SUDDEN LOADING" (REF. [3]),
THE STRESS VALUE WILL REACH:

$2 \times 1122.0 = 2{,}244.$ [psi]

ALLOWABLE SHEAR STRESS REF. [4]

$$\tau = 0.4\,\sigma_y$$

ASSUMING $\sigma_y = 36{,}000$ psi

$$\tau = 0.4\,(36{,}000)$$

$$\tau = 14{,}400 \text{ [psi]}$$

THE $2244. < 14{,}400$

THE TORQUING OF THE BOLTS, TO VALUES SPECIFIED ON PAGE 17 (FIG. 1) MUST APPLY, TO GUARANTEE RIGHT PERFORMANCE OF THE ASSEMBLY DURING THE CRITICAL TRANSPORTING STEPS.

friction, inertia of moving members, rotational forces upon bearings and their housings, flywheel energy, and so on. He now has a graphic picture of the loads emanating from the power train from end to end. From this information he proceeds further to chart the distribution of forces, adding in the dead weight of machine members.

Considering individual members, there are many possibilities. Torque on a shaft or other revolving part is determined from the motor horsepower and speed ($T = 63{,}030 \times hp/rpm$). Or, tool pressure and work or tool diameter, if known, permit calculating the torque.

Many mechanical and electromechanical transducers are available to help in evaluating loads on existing equipment or on prototypes. Many of these instruments incorporate electrical strain gages in a precision bridge-type sensing element. Such transducers include load cells, pressure gages, torque meters, dynamometers, accelerometers, flow meters, and load beams.

On equipment such as a hoist or lift truck, the maximum load on members can be figured back from the load required to tip the machine over.

When following an existing design on a power shovel or ditch digger for example, the maximum strength of cables that have proven satisfactory in service can be used to work back to the load on machine parts.

If a satisfactory starting point cannot be found, the design can be based upon an assumed load and subsequently adjusted from experience and test.

4. FACTOR OF SAFETY

The anticipated loading, translated into stresses, dictate the proportions of the individual machine member. However, a factor of safety must be included in the calculations in order to ensure the member's withstanding greater forces that may possibly result from:

1. variations in the material;
2. faulty workmanship in fabrication;
3. variations in actual load (Ex: hitting an immovable object with an agricultural implement; interrupted cut in rough machining hard steel on a medium-duty machine tool; overloading a lift hook; etc.); and
4. error in design computations.

There are various ways to determine the factor of safety, and various ways in which to use it. The two decisions are interrelated.

In order for a machine member to have sufficient strength, the maximum unit stress must be limited to a value less than the material's yield strength or ultimate strength with proper consideration for the safety factor. Once the member's proportions are established, this allowable unit stress can then be translated into allowable load.

Ordinarily the allowable stress must be relative to the material's yield strength. In most machine members the permanent deformation that would result from exceeding the yield strength might seriously affect further performance of the member. This is not always the case however; and if a degree of permanent deformation can be tolerated, a design based on ultimate strength can be made at less cost.

In order for a machine member to have sufficient rigidity, the maximum allowable strain or deflection is the determining factor. In the past many designers were under the impression that zero deflection was desirable. This is not at all realistic: if zero deflection is mandatory, zero stress is mandatory. This would mean the member could carry no load at all.

Once the maximum allowable strain is established, the corresponding stress figure can be obtained since stress and strain have a proportional relationship within the elastic range. The safety factor is applied here to determine the maximum allowable stress, which can then be used in proportioning the member.

The relationship of stress to strain is expressed by the material's modulus of elasticity, which is 30,000,000 psi for all steels in tension. Thus, if the maximum allowable strain is 0.001 in./in., the corresponding stress would be 30,000 psi. The modulus of elasticity of a steel in shear is 12,000,000 psi; therefore, it is essential to keep in mind the type of force involved.

Any basic rule-of-thumb safety factor that is sufficient for static loads under ideal conditions must be increased under certain circumstances. It is important to correctly determine the mode of load. Consider not only the condition at time of initial construction, but the possible effects of wear. A cam follower in a barrel cam produces a variable loading. After a relatively short period of service, wear in the cam track often results in an additional severe impact loading.

High speed motion pictures and vibration monitoring equipment frequently reveal variable loading or impact loading conditions where only static loads had been assumed.

A variable load necessitates use of a higher safety factor than a static load does. An impact load also requires use of a higher safety factor.

The presence of local areas of concentrated stresses are usually ignored in assigning a safety factor under static load. However, under impact or variable load, these concentrated stresses have a vital role in reducing the maximum allowable stresses.

High stress concentrations are most commonly associated with abrupt section changes. They also are present at points of contact between a member and its support or load. An example of this exists where pressures of high intensity evolve between mechanical fasteners and the members they connect.

Traditional Safety Factor

One procedure for determining the factor of safety, following traditional practices of the machinery builders, is as follows:

1. assign an initial factor of safety of 3; and
2. if a cast material, multiply by 1 ⅓; and
3. if a brittle material, multiply by 1.2; and
4. if impact loads, multiply by 2.

For example, the factor of safety of the following materials would be:

1. rolled steel	3.0
2. cast steel (3 × 1 ⅓)	4.0
3. malleable iron (3 × 1 ⅓)	4.0
4. gray cast iron (3 × 1 ⅓ × 1.2)	4.8
5. extruded aluminum	3.0
6. cast aluminum (3 × 1 ⅓)	4.0

A malleable iron design subjected to impact loads would thus be assigned a service factor of 8.

These service factor values are based on their being applied to the ultimate strength of a material. In other words, if the bar steel to be used in a tension member has an ultimate tensile strength of 90,000 psi, dividing by the service factor of 3 would give the allowable unit stress of 30,000 psi to be used in design computations.

If working with variable or fatigue loads, the proper endurance value for the material is divided by the factor of safety as found above.

It is sometimes simpler to apply the service factor as a multiplier to the calculated load on the specific member, thereby giving us the allowable load to be used in our computations rather than the allowable unit stress.

In either case, whether the service factor is applied as a divisor to the ultimate strength of the material or as a multiplier to the calculated load in the member, we would end up with a member that would fail only if the applied forces reached 3 times its rated load-bearing capacity.

An error is sometimes made in simply applying the safety factor to the service load on the machine itself. The results are not as reliable, since the influence of dead weight of members, developed horsepower, and other factors involved in the total forces on the individual members are not considered in the resultant safety margin for any individual member.

TABLE 1. - ALLOWABLE STRESSES

Conservative Interpretation of AISC Specifications	
Tension	$\sigma = .60\,\sigma_y$
Bending	$\sigma = .60\,\sigma_y$
Shear	$\tau = .40\,\sigma_y$
Compression $\frac{L}{r}$ from zero to C_c	$\sigma = \frac{\sigma_y}{1.92} - \frac{\sigma_y^2}{7.68\,\pi^2 E}\left(\frac{L}{r}\right)^2$ or $\sigma = \left(\frac{16{,}900}{L/r}\right)^2 \frac{1}{1.92}$
$\frac{L}{r} \geqq C_c$	$\sigma = \frac{\pi^2 E}{1.92\left(\frac{L}{r}\right)^2}$ or $\sigma = \left[1 - \frac{1}{2}\left(\frac{L/r}{C_c}\right)^2\right]\frac{\sigma_y}{1.92}$
where: $C_c = \sqrt{\frac{2\,\pi^2 E}{\sigma_y}} = \frac{23{,}900}{\sqrt{\sigma_y}}$	

For further discussion of allowable stresses for Columns, see Sect. 2.5

Structural Safety Factors

The structural field has widely adopted values for the safety factor to be applied to various materials. AISC research and specifications have been interpreted to give corresponding allowable stresses (Table 1).

These AISC (American Institute of Steel Construction) allowable values are realistic in terms of today's superior materials. However, the lower values are based on yield strength of the material and not ultimate strength. In view of the previous arguments in favor of designing to avoid permanent deformation, not just failure, these values appear to be more appropriate to today's need.

Reducing the Safety Factor

The safety factor figured into design calculations is often recognized as being too large and is probably adding unnecessarily to the product cost. Very often safety codes dictate the practice. However, even where no code applies, the designer is loathe to reduce his section dimensions arbitrarily. This is particularly true if his design is based on principal forces and the safety factor has been covering the influence of unknown or unstudied secondary forces.

The safety factor is no longer as critical in de-

4. TRANSPORT ASPECTS / HANDLING SKETCHES

4.1 TRANSPORT OF THE 1 LITER BUBBLE CHAMBER APPARATUS ASSEMBLY

4.1.1 PROCEDURE

a) INSTALL (2) LIFTING EARS (SKETCH ASZ 12.21.04) ADHERE TO SPECIFIED ON: SKETCH ASZ 12.29.04, DESCRIPTION AND SPECIFIED VALUES.

b) INSTALL THE LIFTING SLINGS. THE INNER - WHICH GOES THROUGH THE LIFTING EAR - FIRST;

c) INSTALL THE OUTER SLINGS NEXT. THE SLINGS HAVE PULLERS (POS. "G") ALLOWING FOR, RIGHT SET UP OF THE SUSPENSION ELEMENTS.

d) CHECK ALL LIFTING ELEMENTS OF THE SUSPENDED STRUCTURE; CORRECT AND ADJUST IF NECESSARY.

4.1.2 READ THE "HAZARD ANALYSIS" DOCUMENT BEFORE MOVING THE ASSEMBLY TO THE TRANSPORTING SHAFT.

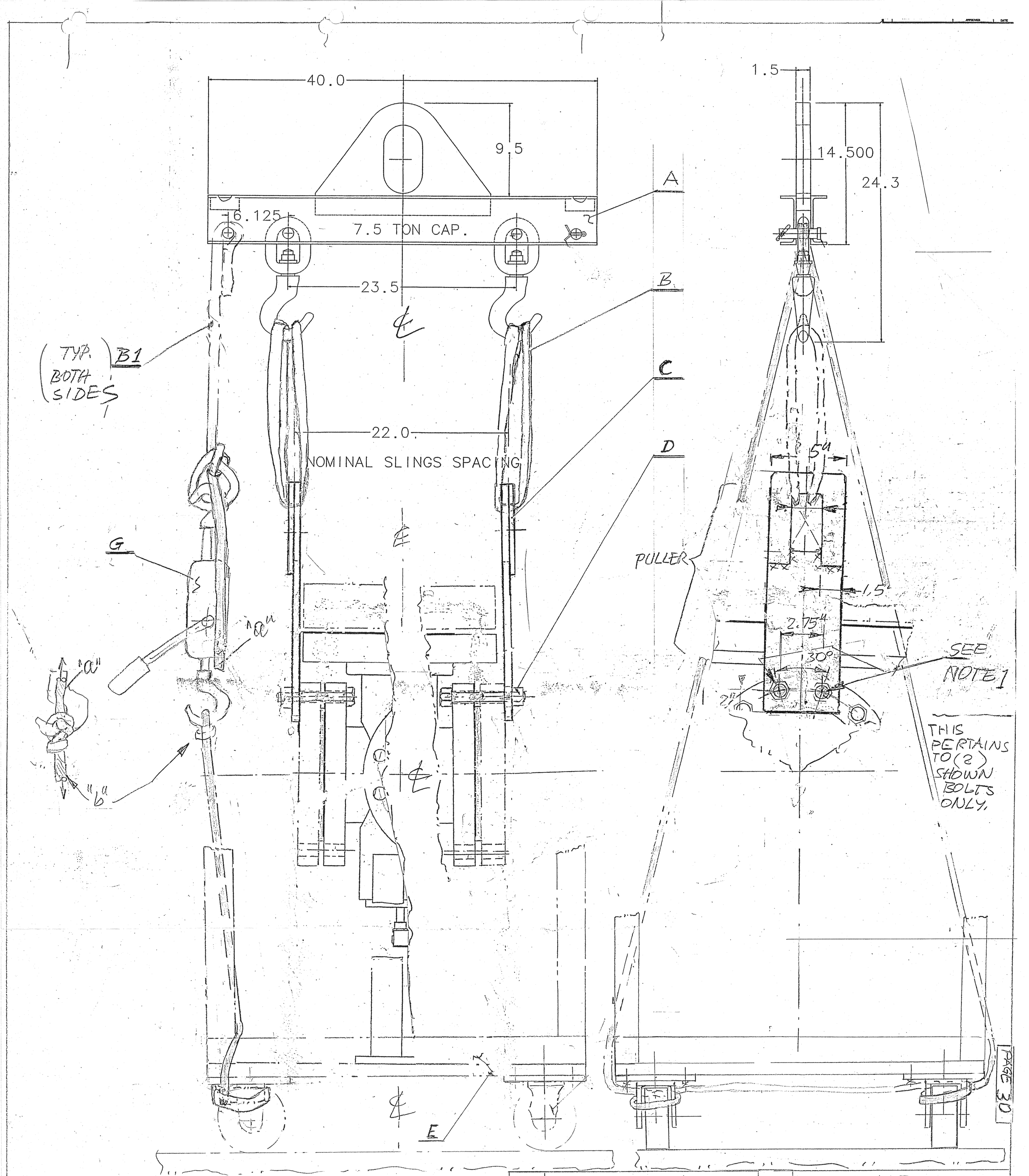

B1	SLINGS - 2 TON RATED CAPACITY (EACH)
G	PULLER - 1 TON CAP. MIN.

E	1 LITER BUBBLE CHAMBER ASSEMBLY - FRAME AND APPARATUS / CART
D	(4) EXISTING 3/4"-10 UNC, NUT AND BOLTS, GRADE TORQUE TO VALUES OF NOTE 1
C	LIFTING EAR - 1.5 TON CAPACITY SKETCH asz 12.21.04
B	SLINGS - 2 TON RATED CAPACITY EACH
A	7.5 TON CAPACITY LIFTING FIXTURE (ENG. SPEC. NO: EC29L414

1. MINIMUM REQUIRED TIGHTENING TORQUE: MAX. 165 [lbft] 4.1
MIN. 125 [lbft]

NOTES

SKETCH asz 12.29.04

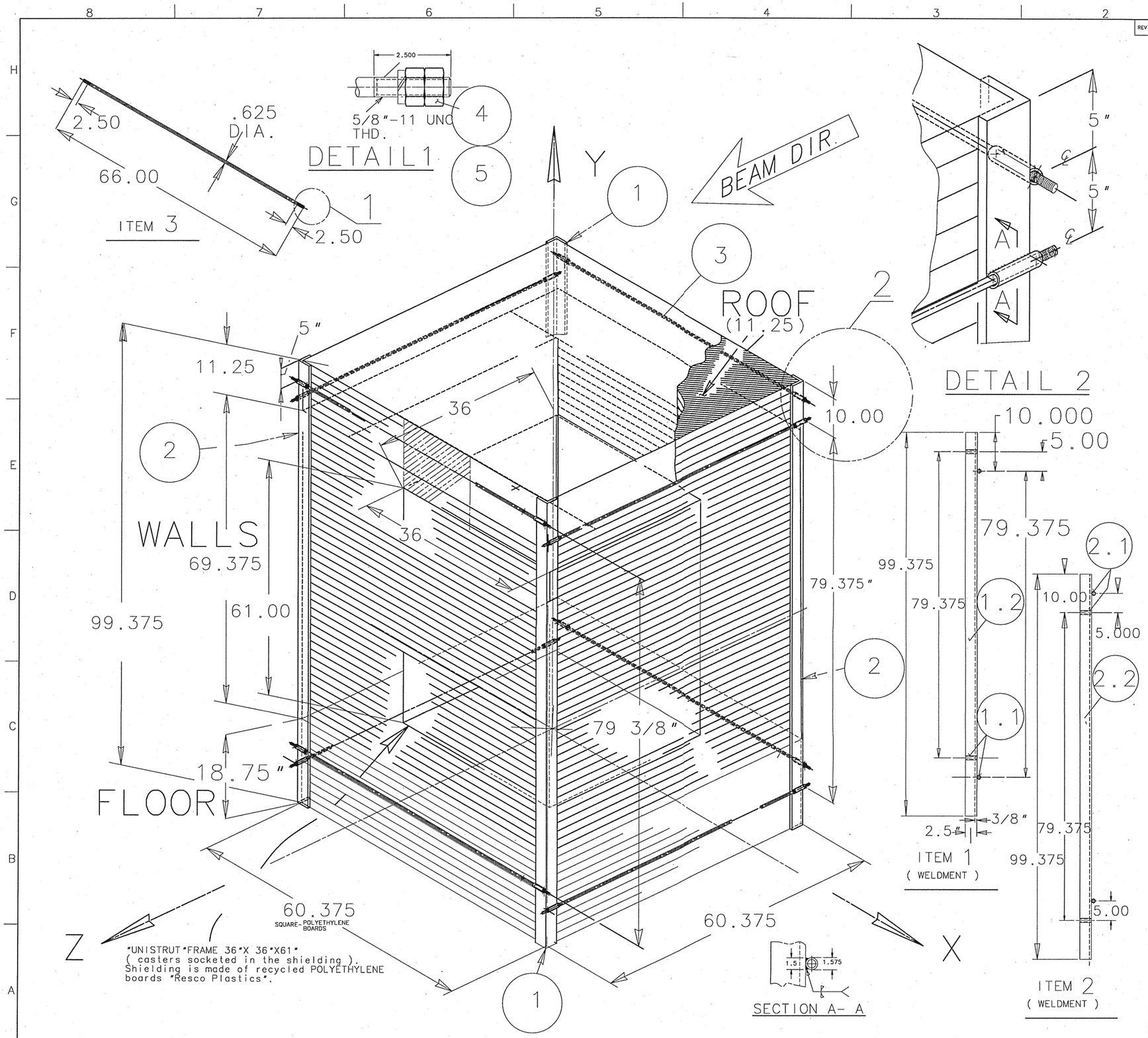

NOTES:
1. ITEM 4
McMASTER CARR CAT. PART NO : 91694A320
2. ITEM 5
McMASTER CARR CAT. PART NO : 90073A240
3. THIS DWG WAS FORMERLY CALLED
SKETCH: asz_12.03.04

ITEM	MATERIAL	DESCRIPTION	Q'TY
5		5/8" SPRING LOCK WASHER 0.24 " THICK	16
4	ASTM A563 GRADE DH	5/8" -11 UNC HEX NUT	32
3		STEEL ROD 5/8" DIA X 66" LG.	8
2.2	ASTM-A36	ANGLE 2 1/2" X 2 1/2" X 3/8"wall X 99.375 "LG.	2
2.1	ASTM-A53	PIPE 1.050" O.D. X 0.154"WALL X 2.625" LG.	8
2		WELDMENT	2
1.2	ASTM-A36	ANGLE 2 1/2" X 2 1/2" X 3/8"wall X 99.375 "LG.	2
1.1	ASTM-A53	PIPE 1.050" O.D. X 0.154"WALL X 2.625" LG.	8
1		WELDMENT	2

REV	DESCRIPTION	DRAWN	DATE
		APPROVED	DATE

UNLESS OTHERWISE SPECIFIED					
			ORIGINATOR	A.SZYMULANSKI	03-DEC-2004
			DRAWN	A.SZYMULANSKI	03-DEC-2004
±	±	±	CHECKED	---	15-MAY-2008
1. BREAK ALL SHARP EDGES MAX.			APPROVED	----	15-MAY-2008
2. DO NOT SCALE DRAWING.			USED ON	ENGINEERING NOTE MD-ENG-075	
3. MATERIAL TO BE PER UPON ASME/ASTM STANDARDS					
4. MAX. ALL MACH. SURFACES			MATERIAL		
5. DRAWING UNITS: U.S.INCH					

FERMI NATIONAL ACCELERATOR LABORATORY
UNITED STATES DEPARTMENT OF ENERGY

PPD/MECHANICAL DEPT.
UNIV OF CHIC 1 LITER BBBL CHMBR
SHIELDING & RESTRAIN COMP. ASSY

SCALE	DRAWING NUMBER	SHEET	REV
NONE	9213.400-ME-466067	1 OF 1	

CREATED WITH : Ideas12NXSeries | GROUP: PPD/MECHANICAL DEPARTMENT

REV	DESCRIPTION	DRAWN	DATE
		APPROVED	DATE

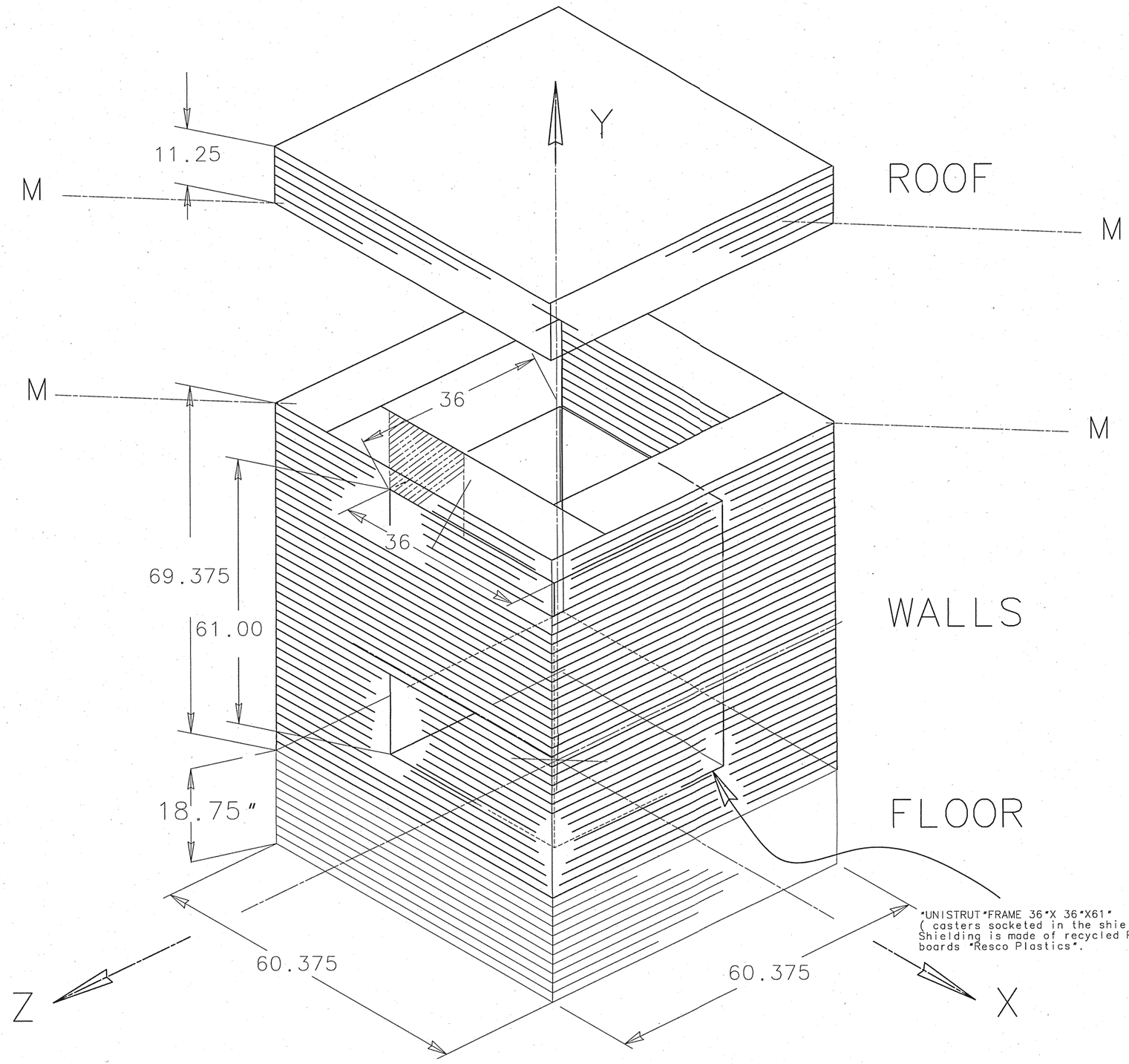

"UNISTRUT"FRAME 36"X 36"X61"
(casters socketed in the shielding).
Shielding is made of recycled POLYETHYLENE
boards "Resco Plastics".

NOTES:

1. THIS DWG WAS FORMERLY CALLED
SKETCH: asz.11.19.04

UNLESS OTHERWISE SPECIFIED			ORIGINATOR	A.SZYMULANSKI	19-NOV-2004
			DRAWN	A.SZYMULANSKI	19-NOV-2004
±	±	±	CHECKED	----	15-MAY-2008
1. BREAK ALL SHARP EDGES MAX.			APPROVED	----	15-MAY-2008
2. DO NOT SCALE DRAWING. 3. DIMENSIONS BASED UPON ASME Y14.5M-1994 4. MAX. ALL MACH. SURFACES			USED ON	ENGINEERING NOTE MD-ENG-075	
5. DRAWING UNITS:U.S.INCH			MATERIAL		

FERMI NATIONAL ACCELERATOR LABORATORY
UNITED STATES DEPARTMENT OF ENERGY

PPD/MECHANICAL DEPT.
UNIV OF CHIC 1 LITER BBL CHMBR
SHIELDING ASSEMBLY

SCALE	DRAWING NUMBER	SHEET	REV
NONE	9213.400-ME-466068	1 OF 1	

CREATED WITH : Ideas12NXSeries | GROUP: PPD/MECHANICAL DEPARTMENT

REV	DESCRIPTION	DRAWN	DATE
		APPROVED	DATE

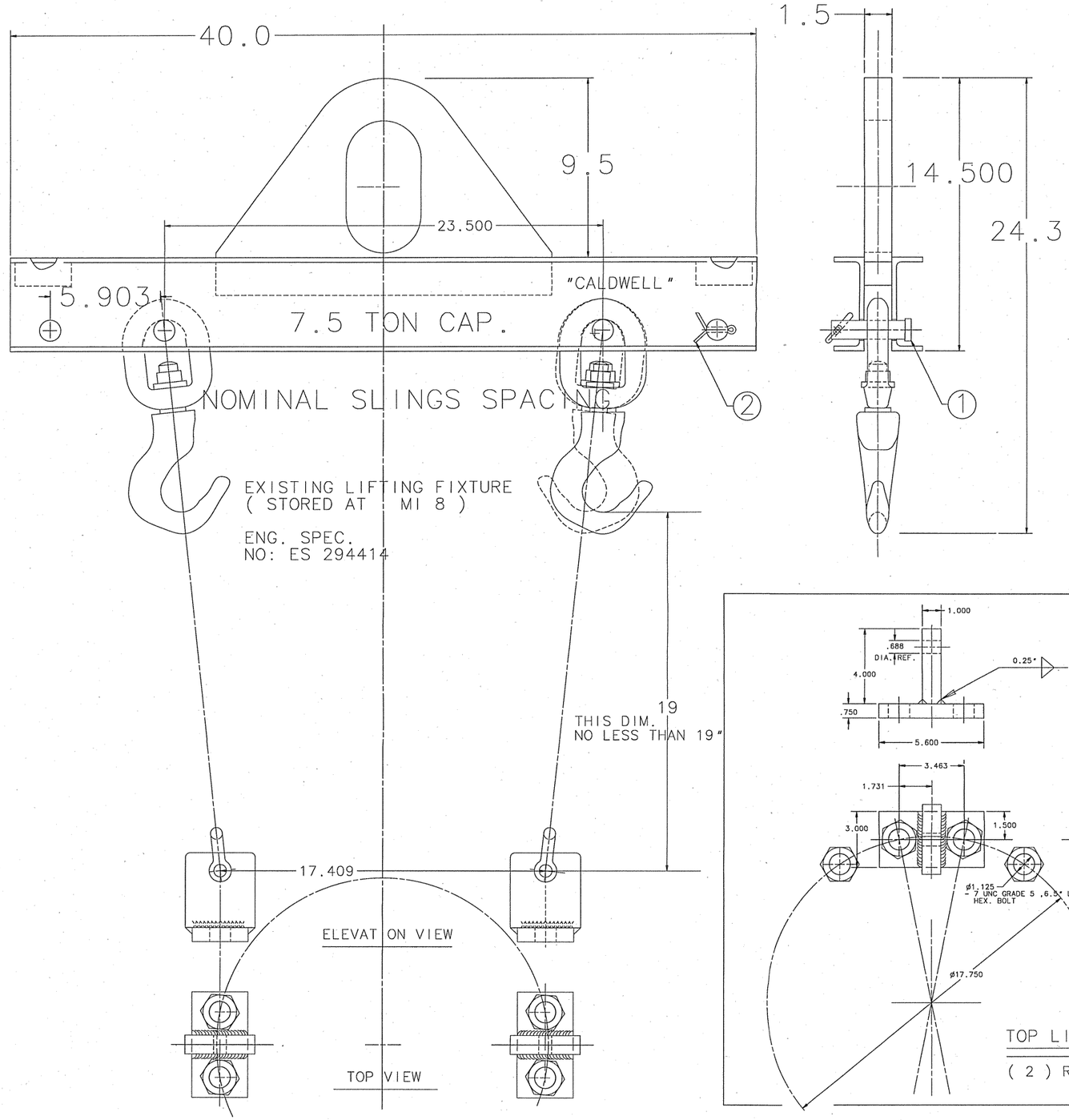

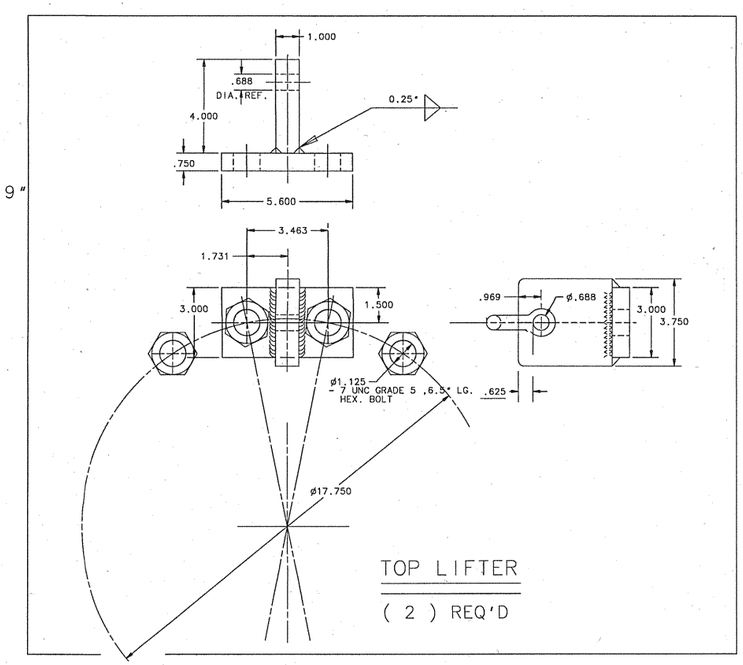

NOTES:

1. THIS DWG WAS FORMERLY CALLED SKETCH: asz.12.28.04

ITEM No		Qty
2	0.283" DIA. COTTER PIN	4
1	1" DIA PIN X 4.28" LG.	4

UNLESS OTHERWISE SPECIFIED	ORIGINATOR	A.SZYMULANSKI	28-DEC-2004
± ± ±	DRAWN	A.SZYMULANSKI	28-DEC-2004
1. BREAK ALL SHARP EDGES MAX.	CHECKED	----	15-MAY-2008
2. DO NOT SCALE DRAWING.	APPROVED	----	15-MAY-2008
3. DIMENSIONS BASED UPON ASME Y14.5M-1994	USED ON	ENGINEERING NOTE MD-ENG-075	
4. MAX. ALL MACH. SURFACES √	MATERIAL		
5. DRAWING UNITS: U.S. INCH			

FERMI NATIONAL ACCELERATOR LABORATORY
UNITED STATES DEPARTMENT OF ENERGY

PPD/MECHANICAL DEPARTMENT
UNV OF CHIC 1 LITER BBL CHMBR
LIFTING FIXTURE 7.5 TON CAP

SCALE	DRAWING NUMBER	SHEET	REV
NONE	9213.400-ME-466069	1 OF 1	

CREATED WITH : Ideas12NXSeries GROUP: PPD/MECHANICAL DEPARTMENT