Fermilab

Particle Physics Division
Mechanical Department Engineering Note

Number: MD-ENG-132 Date: 19 September, 2007

Project Internal Reference:

Project: NuMI

Title: MINOS SHAFT HELIUM PIPE INSTALLATION for Decay Pipe

Author(s): Dave Pushka

Reviewer(s):

Key Words: MINOS SHAFT PIPING

Abstract Summary: A one inch nominal, schedule 10S stainless steel pipe is to be installed in the MINOS shaft for the purpose of piping helium to the decay pipe. This pipe is assembled from 20 foot lengths of plain end pipe. Socket weld fittings are used.

To install this pipe, a welding station will be set up at the bottom of the MINOS shaft, approximately 20 feet above the shaft bottom. The first length of pipe will have lifting lugs attached to it and will be pulled up by a hoist mounted at the top of the shaft. When the bottom of the first length is about 20 feet above the shaft bottom, a second length will be placed vertically under the first length, and socket weld coupling aligned. The weld between the socket coupling and the pipe will be made and the two pipe assembly will be raised 20 feet with the hoist. This process will continue until the first length of pipe reaches the shaft top.

At this point, men working from the man basket will attach the pipe to the existing unistrut supports located in the shaft and presently supporting electrical conduits. Once the pipe is completely attached to the unistrut, the hoist will be released from the pipe.

Calculations:

Load Determination:
The pipe being installed is one inch nominal diameter, schedule 10S pipe. According to the data in Crane technical paper 410, this pipe material weighs 1.40 pounds per foot.

The NuMI Tunnels and Halls Drawing C-23 indicate that the MINOS shaft is 342'-6 tall.

The maximum load of the full 342'-6 of pipe at 1.40 pounds per foot is 479.5 pounds.

The winch cable is 9/16 inch diameter, 6 x 19 IWRC, and weighs 0.59 pounds per foot. The 342.5 feet of cable weighs 202 pounds.

So, design the winch support and pulley and attachment to the pipe for a minimum load of 1000 pounds. This is well within the capacity of the winch and well in excess of the anticipated load.

Connection to the Pipe for the lifting cable:
Use two 3/8" normal shackle size anchor shackles. Each has a capacity of 2000 pounds. Pin diameter is 0.44 inches. Alternatively, two ½" normal shackle size anchor shackles may be used if these are more readily available. ½ anchor shackles provide 4000 pound capacity each. Pin diameter is 5/8 inch.

Attach two lifting lugs to the first pipe section and locate the lugs so that they are 180 degrees apart when the pipe is viewed from the end. Design each lug for shear connection strength of 2000 pounds. Since the pipe wall is only 0.109 inches thick, limit the weld size to 1/8 inch fillet.

Allowable load of the fillet weld is 0.3 * Fv, where Fv is the nominal tensile strength. For E308 filler metal, this is 60 ksi. So, the allowable shear stress is 20 ksi. Assume a ¼ thick lifting lug welded to the pipe on both sides with a 1/8 inch thick fillet weld. The allowable load is given by P = 0.707 * w * l * Fv. For w = 1/8 inch, the required length for a 2000 pound capacity is 1.13 inches. If welded on both sides, the length of the lug weld need only be 0.56 inches to achieve the shear strength.

Lifting lugs welded to the pipe:
Assume ¼ inch 304 stainless steel plate is used. Use a 13/16 inch hole (allows the use of ½ or 3/8 inch anchor shackles). Design load is 2000 pounds per lifting lug. Allowable stress should be less than 1/3 yield strength or about 10 ksi. Assume the lug is 2 inches deep, this gives a tensile area of 0.25 * (2 – 13/16) = 0.2968 square inches. Allowable load is Then 2970 pounds per lug.

Carbon steel lifting lugs are acceptable as the strength is greater than that of stainless, but the filler metal needs to be E309 to join the carbon and stainless steels.

Make the lifting lug 4 inches long in the direction parallel to the pipe. This gives more than sufficient weld length and makes the bending moment induced by the distance from the pipe centerline to the shackle pin centerline (distance is 1.3” / 2 + 1” = 1.65 inches) negligible. The additional tensile load based on the actual weight of the 480 pounds of pipe divided between two lifting lugs (240 pounds per lug) on the weld located at the bottom edge of the lifting lug is (1.65 inches / 4 inches * 240 pounds = 100 pounds). Resulting tensile stress on the weld assuming only ½” length of 1/8” fillet weld is 2200 psi.

Use a minimum of 1 inch of 1/8” fillet weld on each side at the top and at the bottom of the lifting lug. This provides more than ample shear and bending moment capability.

Hand Sketch of the Lifting Lug:

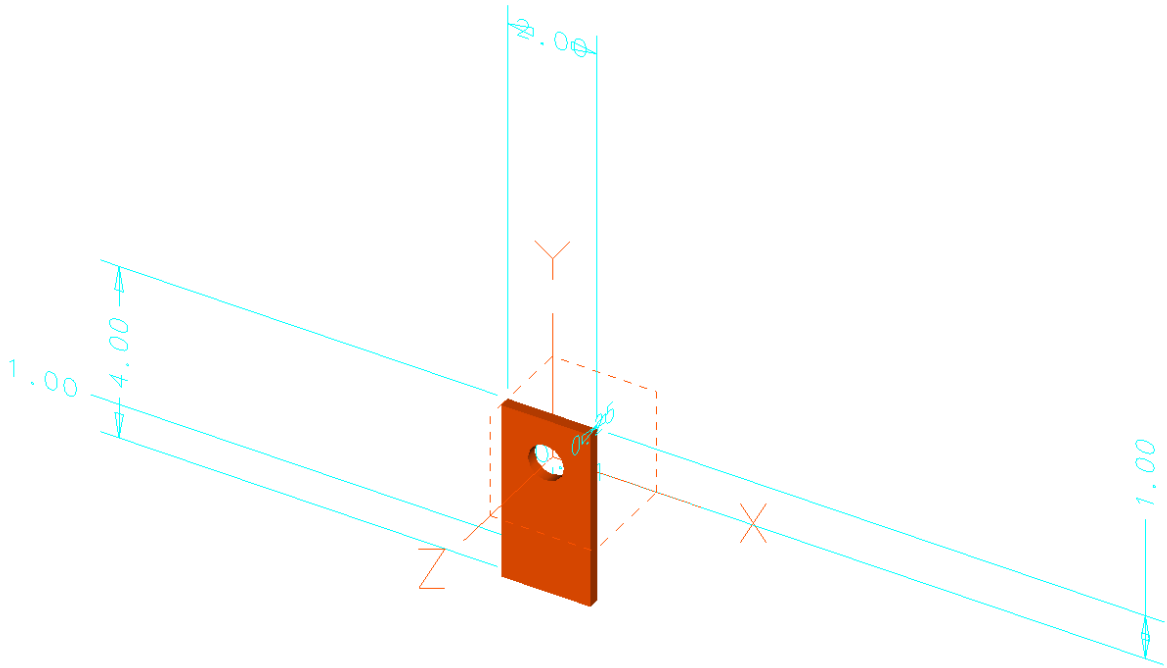

Sketch of Lifting Lugs attached to Pipe:

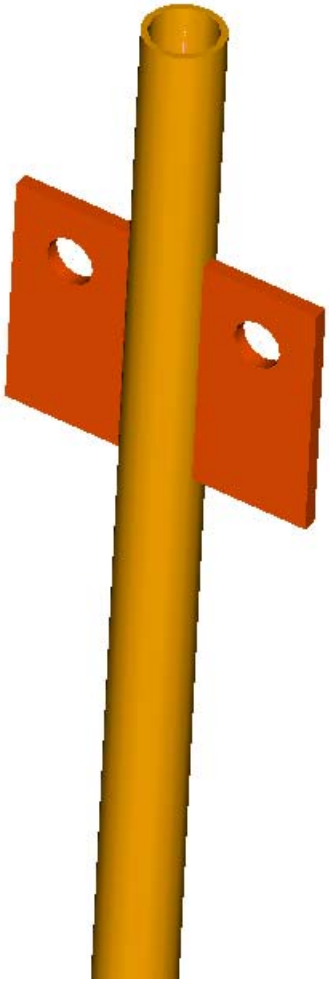

Hoist Calculations:

Thern winch has a line capacity of 11,000 pound for the first wrap of cable on the drum, decreasing to 5,800 pound capacity for a full drum. When the entire length of pipe is supported from the winch, the load is about 480 pounds plus the weight of the sling, shackles and hook. Assume this totals 550 pounds. Therefore, the Thern winch is more than sufficient (by a factor of about 10) to lift the entire 342 feet of pipe.

For the winch to work properly, a sheave needs to be located above the pipe to pay the cable out vertically. An existing sheave made by McKisick is labeled as 3.00 ton capacity, 5/8 inch maximum cable diameter, and carries

the model number BKL 601-S 10”. The 10” diameter of the sheave provides a satisfactory bend radius for the 9/16 inch cable.

Cantilevered Beam Calculations:
To place the sheave out over the edge of the shaft collar, two American standard shaped aluminum ‘I’ beams will be used. The ‘I’ beams are 8 inches deep, 4 inch flange width and ¼ inch web.

Assume that the I beams will cantilever 24 inches. The maximum bending moment will be 550 pounds * 24 inches = 13,200 in-pounds. The two beams will be sistered together. Each individual I beam has a 57.55 in^4. Bending stress, sigma = MY/I gives a bending stress of (13,200/2) in-pounds * 4 inches /57.55 in^4 = 458.7 psi. By comparison to the Aluminum Association’s Aluminum Construction Manual Section 1, part 30 Table 3.3.27 if the allowable stresses for building and similar structures for 6061 T6 aluminum, the allowable stress is 19,000 psi. (b/t = 2 / 0.421 = 4.75, so the slenderness is less that 5.2 and the value in the first column of the table is used). Shear stress is 550 pounds / 2 beams / 5.4 in^2 per beam is 50.9 psi. This is far less than the allowable 12,000 psi for the gross section. Conclusion is that these beams are more than adequate.

Anchoring of the Beam to resist up-lift:
The overall length of the beams is 9’-6”. Cantilever is assumed to be 24 inches. Assume the load at the end of the cantilevered beam assembly is 550 pounds and sum the moments about the part of the beam located at the tip if the shaft collar. The resulting uplift to be resisted at the back end of the beam assembly is: 550 pounds * 24 inches / (112 inches – 24 inches) = 150 pounds. So the anchoring at the end of the cantilever beam only requires a vertical load capability of 150 pounds.

Concrete used in the floor of the MINOS service building is 4000 psi material. A ½ inch Hilti drop in anchor provides an allowable tensile working load of 1690 pounds and an allowable shear of 1560 pounds. Therefore, only two ½ inch Hilti drop in anchors are more than sufficient to anchor the end of the cantilevered beam supporting the sheave. While one anchor is sufficient, use of only one anchor provides a single point failure potential. Therefore, use a minimum of two anchors.