Fermilab

Particle Physics Division
Mechanical Department Engineering Note

Number: MD-ENG-128 Date: 8/9/07

Project Internal Reference:

Project: DECAM

Title: Prime Focus Imager Design, Steady State Heat Loads

Author(s): H. Cease

Reviewer(s): D. Finley, R. L. Schmitt

Key Words: DECam, Prime Focus Imager

Abstract Summary:
A description and analysis is provided for the heat loads inside the prime focus Imager. The Imager description includes the vessel's internal geometry. The heat loads on the focal plate and Imager internal heat exchanger are calculated. Heat loads external to the Imager vessel such as the plumbing system are not included in the analysis.

Applicable Codes:
N/A

TABLE OF CONTENTS

TABLE OF CONTENTS 2
Introduction 3
Mechanical Layout 4
The Imager 4
Focal Plate Assembly 5
Focal Plate 6
Focal Plate Supports 6
Heat Exchanger 7
Copper Braids 7
Heat loads 8
Thermal Radiation on the Focal Plate 8
Thermal Conductivity through the Focal Plate Supports 9
Heat Load from the Electronics 9
Conduction through the cables: 9
Heat generated by the electronics: 10
Heat Load from Trim Heaters 10
Heat Load on the Cooling Source 11
Thermal Radiation on the heat exchanger 11
Conductivity through the heat exchanger supports 12
Total Heat Load Input into the Heat Exchanger 13

Introduction

The Imager vessel provides the appropriate environment for the CCDs including a support plate and the correct operating temperature. The CCD array is supported from an aluminum focal plate that is chilled to the desired operating temperature. Cooling to the CCDs is provided by a liquid nitrogen cooling system coupled to the focal plate using copper braids. Heaters and RTDs are located at the copper braid to focal plate joint. The temperature at the copper braid is controlled by adjusting power to the heaters based on the RTD temperature feedback to the control system. The vessel is under vacuum to prevent water condensation on the CCDs and to minimize thermal losses. Figure 1 shows the CCD vessel internal components and also a view of the external components.

Design requirements for the imager include:

- The focal plate operating temperature is -100ºC and possibly as low as -140ºC,
- Temperature uniformity across the focal plane within 10ºC (T-22, T-23, T-24),
- Temperature stability of +/-1 C during a night (T-22, T-23, T-24),
- Focal plane flatness of 30 microns peak to peak (T-47),
- External ambient temperatures on the telescope are expected to be from -5ºC to +27ºC (T-48).
- All specifications are to be met at any of the telescope orientations (T-80).
- Vacuum during operations e-6 torr to prevent water condensation on the CCD surfaces.
- Automated controls as much as possible to reduce manpower efforts during operations.

The mechanical layout of the Imager vessel and the vessel within the prime focus cage, the thermal management system, and the vacuum system are described in detail.

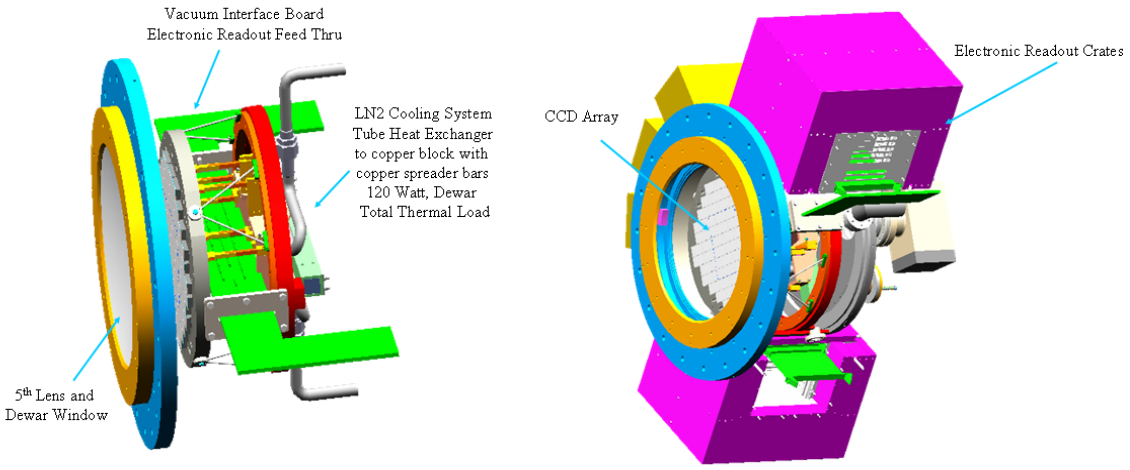

Figure 1. Internal components of the Imager and external view

Mechanical Layout

The Imager

The imager vessel is a 24 inch diameter vacuum vessel that houses the CCD array, internal cooling system, and Vacuum Interface Board. The VIB transfers the CCDs signals from inside the imager to the readout crates. The Imager instrument control i/o crates and CCD readout electronics crates are attached to the exterior of the vessel. Three Monsoon crates are used to readout the CCDs. Approximately 2/3 of the CCDs are readout on one side of the imager and the other 1/3 on the opposing side. All of the CCD signals are fed out of the vacuum using a Vacuum Interface Board. The VIB that reads out 1/3 of the CCDs is also used to readout all of the temperature sensors for the focal plate thermal control system. The Monsoon crates are positioned such that each card in the crate can be removed for repair without dismounting the entire crate. The instrument control crates are mounted to the Imager so that the imager will operate fully while it is not on the telescope. A separate independent feed thru is used for the heater power connections.

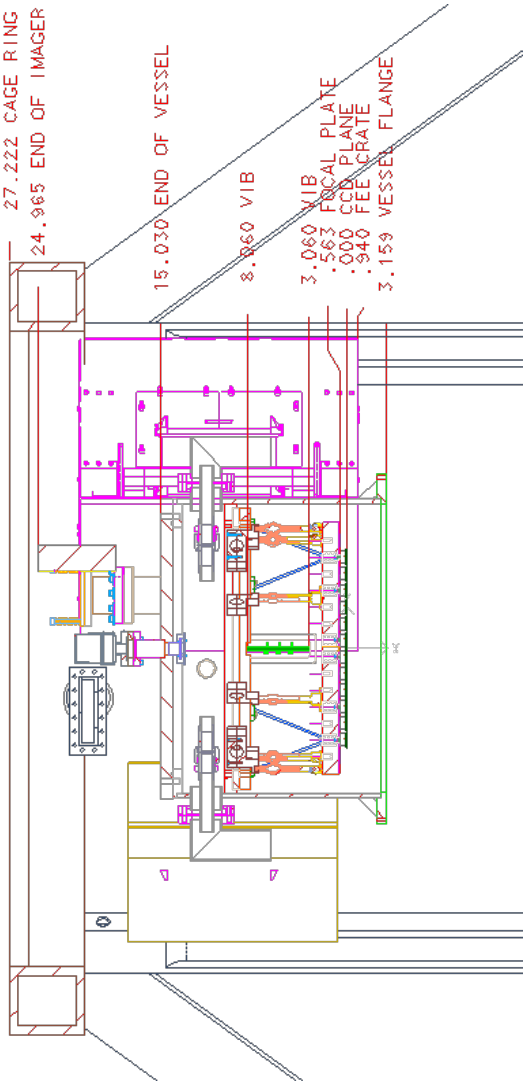

Figure 2 Imager Dimensions

Focal Plate Assembly

The Focal Plate Assembly includes the focal plate, all CCDs, the support for the focal plate, and the attached copper braids for cooling and thermal control. The assembly interfaces with the heat exchanger and cooling system, the VIB, and an internal mounting ring inside the imager vessel. The C5 cell, rear flange on the imager, and the internal heat exchanger must be removed to gain access to the CCDs. The VIB stays in place. There is an alignment ring between the focal plate assembly and the mounting ring inside the imager vessel.

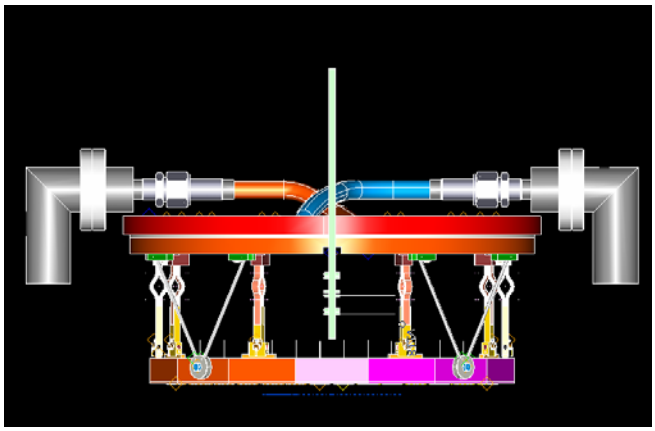

a) Side View

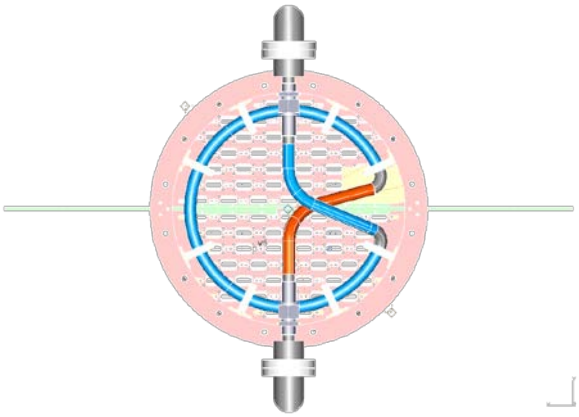

b) End View

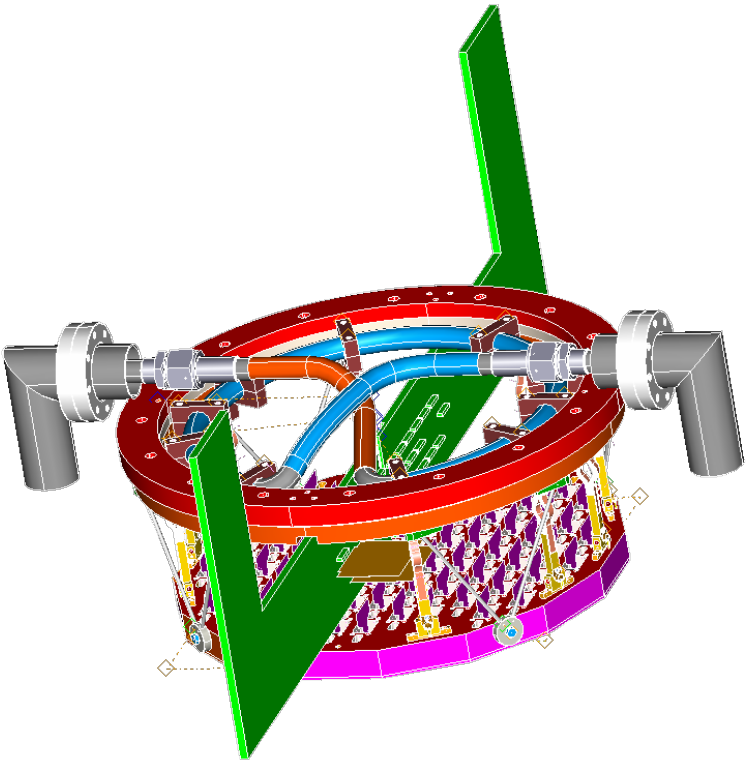

c) Isometric View

Figure 3 Focal Plate Assembly, with Heat Exchanger and VIB

Focal Plate

The purpose of the focal plate is to provide a cold flat mounting surface for attaching the CCD array. To meet the requirement for focal plane flatness the focal plate must be machined flat, be thick enough so that it does not sag under gravitational loading, have small temperature gradients to prevent thermal warping, and be supported all within the flatness specification. The construction material is aluminum tooling plate. Tooling plate is used for its machining stability. Aluminum has a good thermal conductivity so temperature gradients are small. The 36 mm thickness has minimal sagging under gravitational loading. Further FEA results of the focal plate and assembly are shown in Doc Db #63, #312, and #586.

Focal Plate Supports

The focal plate is supported using four sets of bipods. The bipod material is Ti-6Al-4V which is a low thermal expansion, low thermal conductivity, high strength metal. Four bipods are used instead of three due to the separation of the focal plate into halves by the Vacuum Interface Board. The Vacuum Interface Board is used to take all of the CCD electronic channels from inside the vacuum to outside vacuum. Two bipods are located on each side of the vacuum interface board. The fourth bipod is mounted last and is set when the other three have been anchored. The bipods are all supported off of the same ring to make handling the assembly easier. Final shimming of the focal plate to the C5 lens can take place between the focal plate assembly mounting ring and the mounting ring inside the CCD vessel. Figure 4 is an illustration of the focal plate assembly with the Vacuum Interface Board and ten CCDs. Experience was gained assembling the focal plate when the Multi-CCD Vessel was constructed.

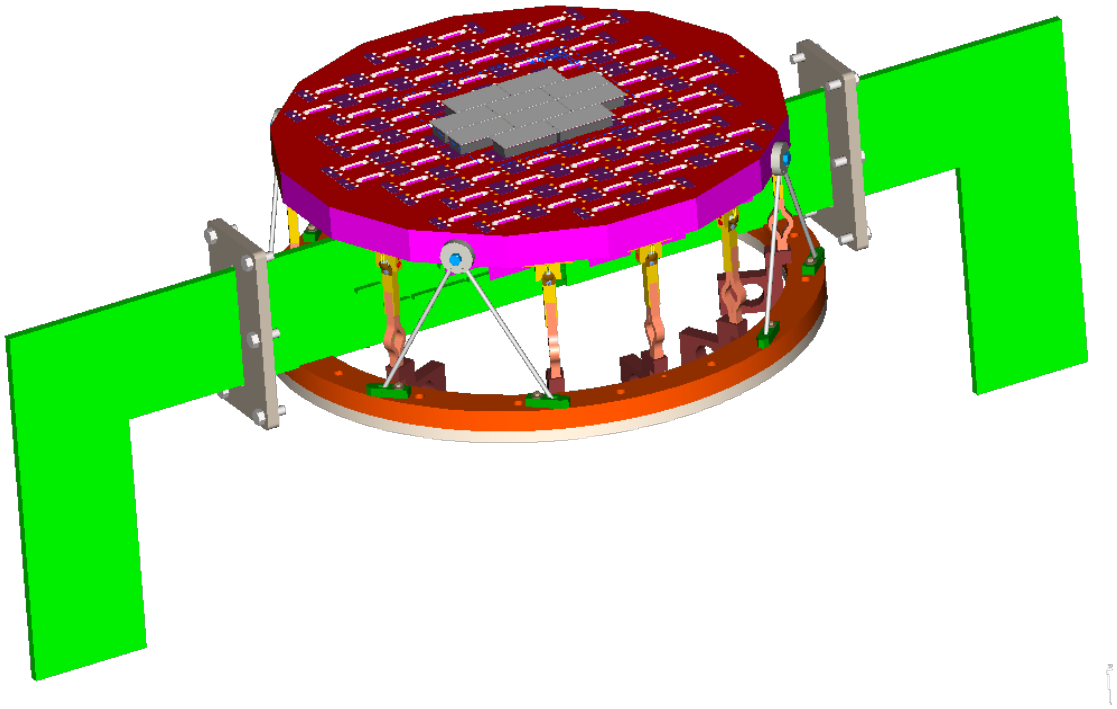

Figure 4. Focal Plate Assembly with Vacuum Interface Board and 10 CCDs

Heat Exchanger

The heat exchanger is used to remove heat from the focal plate. The focal plate operating temperature is -100ºC. In order to cool the focal plate to -100ºC, the heat exchanger operating temperature is -173ºC and uses liquid nitrogen as the refrigerant. The heat exchanger is a simple 1 inch tube that makes a single loop around the inside of the imager vessel. A mounting lug at the end of the copper braid attaches to the heat exchanger tube for thermal transfer. Ten copper braids are mounted around the circumference of the backside of the focal plate. The heat exchanger is removed from the imager by disconnecting the copper braids and the VCR fittings on the tubing and then the assembly is removed out the back of the vessel.

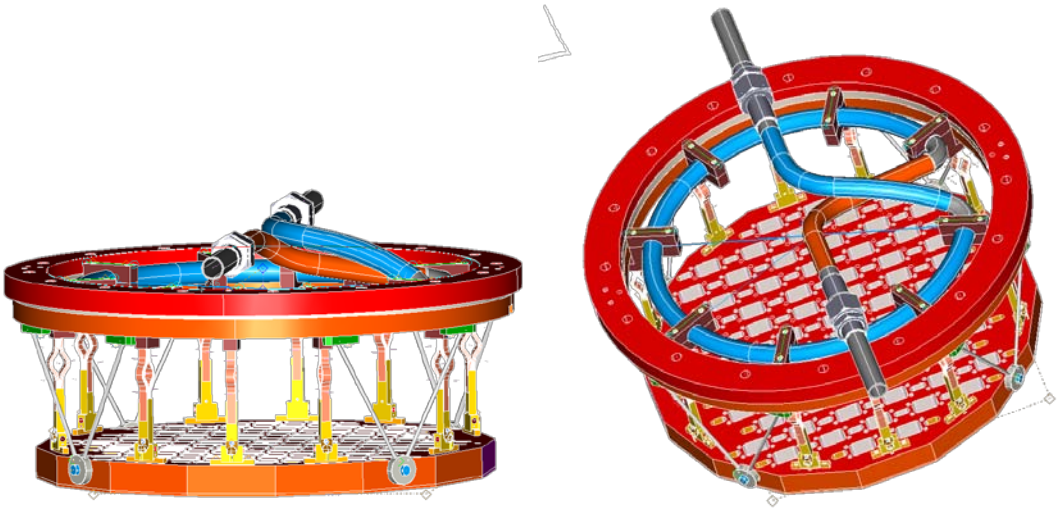

Figure 5 Heat Exchanger Mounted with the Focal Plate Assembly

Copper Braids

The copper braid assembly is the thermal strap between the heat exchanger and the focal plate. The copper braid thickness can be trimmed to adjust the cooling capacity of the braid. A heater and RTD is mounted in the lug on the focal plate end for thermal control. A 55 ºC thermal cutout bi-metallic switch (Cantherm B1205525AEDCC0E) is mounted to the braid and is used in series with each heater for protection against over heating. Electrical isolation is provided between the lug and the mounting block. A layer of 50 micron thick adhesive between the two pieces is used to provide the electrical isolation.

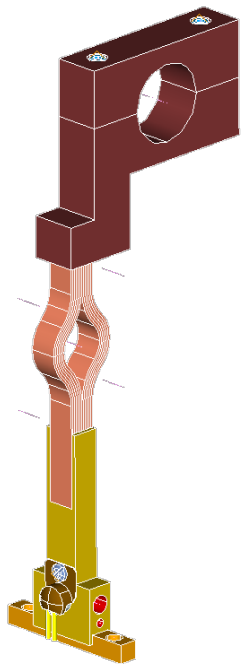

Figure 6 Copper Braid Assembly

Heat loads

Heat loads due to thermal radiation from the optical window, conduction through the focal plate supports, conduction through the CCD cables, the electronics associated with the CCD, and thermal radiation on the heat exchanger are presented.

Thermal Radiation on the Focal Plate

The largest environmental heat load to the cooling system is thermal radiation incident on the focal plate. Thermal radiation comes from warm surfaces like the fused silica C5 lens and the inner surfaces of the imager vessel walls. The total thermal radiation load on the focal plate is approximated by using an emissivity of 1 for the front surface of the focal plate and the surface of the C5 lens. The remaining surfaces on the focal plate are assumed not to have a thermal radiation coupling with the rest of the vessel. DocDb # 312 calculates that the inner surface temperature of the lens is approximately 260K at the center. The desired operating temperature for the cold plate is 173 K (-100ºC). The thermal radiation incident on the focal plate is calculated as:

Q= Area * emissivity surfaces * Stefan-Boltzman Constant * $(T_1^4 – T_2^4)$

Diameter of C5 lens = 0.48 meters
Area of C5 lens = 0.181 m^2
Stefan-Boltzman constant = 5.67e-8 $W/m^2.K^4$
T_1 temperature of the glass = 260 K
T_2 temperature of the focal plate = 173 K in the nominal case.

Q = 0.181 * 1 * 5.67e-8 * $(260^4 - 173^4)$ = 37.7 W

Q = 37.7 Watts for the nominal case when 20 ºC ambient, 260K window temp, and 173K (-100 ºC) focal plate temp.
Q = 27.2 Watts during a cold night when -5 ºC ambient, 244K window temp, and 173K (-100 ºC) focal plate temp.
Q = 43.0 Watts for a warm night of 27 ºC ambient, 267K window temp, and 173K (-100 ºC) focal plate temp.

Reference: ANL report DocDb#312 which states the temperature at the inner surface center of the window is 262K and warmer at the edges of the lens. The induced heat load is reported as 46 watts onto the focal plate when all CCDs are mounted and the ambient temperature is 25 ºC.

Reference CCD World: Emissivity of the CCD and fused Silica window between 0.9 and 1

Thermal Conductivity through the Focal Plate Supports

The heat transfer to the focal plate due to conduction through the focal plate supports is calculated.

Length of an individual support leg = 0.1628 meters (6.41 inches)
Diameter of leg = 4.76 mm (3/16 inch)
Area of leg = 1.78E-5 m^2
Integrated thermal conductivity κ, of Ti-6Al-4V = 5.94 W/m.K
Temperature change from 20ºC to -100 ºC = dT = 120 ºC
One end of the bipod leg stays warm so an average K is used

Q = κ *A*dT / L
Q = 5.94 * 1.78E-5 * 120 / 0.1628 = 0.065 Watts per leg
Q for eight legs = 0.52 Watts

Q = 0.48 Watts during a cold night when κ =5.74, -5 ºC ambient, and 173K (-100 ºC) focal plate temp.
Q = 0.67 Watts for a warm night when κ =6.02 27 ºC ambient, and 173K (-100 ºC) focal plate temp.

Reference : NIST, Thermal Conductivity of Ti-6Al-4V, Cryogenic Material Properties Database, E.D. Marquardt, J.P. Le, and Ray Radebaugh

Heat Load from the Electronics

There are two types of heat loads associated with the electronics. The first is conduction through the cabling and the second is heat generated in the electronics. Heat loads due to the VIB are not considered in this analysis.

Conduction through the cables:

The heat transfer to the focal plate due to conduction through the CCD cables is calculated. Seventy cables are used to readout the electronics. It is assumed that one end of the cable is the temperature of the focal plate and the other end is the vessel wall temperature.

Length of a cable = 0.356 meters (14 inches)
Copper Cross Sectional Area in one cable = 1 E-6 m^2
Area is based on an equivalent width of 27.936 mm (1.113 inches)
and a thickness of 0.039 mm (0.001558 inches or 1oz Cu)
Integrated thermal conductivity (κ), of Copper = 410 W/m.K
Temperature change from 20 ºC to -100 ºC = dT = 120 ºC

Q = κ *A*dT / L
Q = 410 * 1E-6 * 120 / 0.356 = 0.138 Watts per cable
Q for 70 Cables = 9.6 Watts, ambient is 20 ºC and -100º C focal plate temperature
Q = 7.6 Watts during a cold night when -5 ºC ambient, and 173K (-100 ºC) focal plate temp.
Q = 10.3 Watts for a warm night when 27 ºC ambient, and 173K (-100 ºC) focal plate temp.

Reference : Area of copper in a cable, Email from Walter Stuermer 4-3-07
Reference : NIST, Thermal Conductivity of Copper, resistivity = 0.000579 micro-Ohms/cm, Ho, PowelL, Liley

Considering heat losses due to the VIB:
The heat load on the focal plate due to cables is assumed as a worst case when one end of the cable is the temperature of the focal plate and the other end is vessel wall temperature. Conduction losses through the VIB itself are not considered since the cross sectional area of copper for ground planes is much larger in the VIB than in the cables. Radiation losses are not considered since the cables shield the VIB from the rest of the vessel.

Heat generated by the electronics:

The power generated on the AlN board at the CCD is expected to be ~4.3mW on the AlN board with the JFET design. This may double if a parallel JFET design is used. 4.3 mW x 70 CCDs x 2 JFETs/CCD = 0.6 Watts.

The output amplifier on the CCD itself is measured to be less than ~20mW per amplifier x 70CCDs x 2 amplifiers/CCD = ~2.8Watts.
The preamps are powered continuously and is not a function of readout time or exposure time.

The amplifier on the VIB interface card is expected to be ~200mW per channel. The total heat load is 200mW x 2 channels per CCD x 70 CCDs = 28 Watts continuous heat load.

References:
Doc #329 Power calculations on the AlN board.
May 07, Email from T.Shaw CCD amplifier power
July 30, Email from T.Shaw VIB interface card power
Aug 9, Email from Juan Estrada CCD electronic power measured in a cube. Doc #743

Heat Load from Trim Heaters

Heaters located in the copper braids are used for driving the focal plate to the desired operating temperature. When the heaters are turned OFF, the focal plate is cooled. When the heaters are ON, the heat is controlled to drive the temperature to the desired operating temperature. The trim heater controllers have a capacity of 4 watts per copper braid and there are 10 braids for a total of 40 watts.

Heat Load on the Cooling Source

The heat exchanger is a 1 inch diameter stainless steel tube. Copper braids are used to conduct heat from the heat exchanger to the focal plate. Heat loads include the conductivity through the heat exchanger supports and thermal radiation off the of the heat exchanger surfaces.

Thermal Radiation on the heat exchanger

The 1 inch diameter stainless steel tube is essentially self supporting and requires no mounts. G-10 spacers are used to prevent direct contact between the heat exchanger and the imager vessel walls.

Q= Area * emissivity surfaces * Stefan-Boltzman Constant * ($T_1^4 - T_2^4$)

Surface Area of Heat exchanger = 0.297 m^2

Surface Area of the top of the copper braid with a temperature near 100K

= 10 Braids *
[2 sides*2.962 inches tall * 2 inches wide +
(0.625 inches thickness*(3 inch+3 inch+2.5 inch+2.5 inch perimeter))] *
$[(2.54 \text{ cm/inch})/(100 \text{ cm/m})]^2$ unit conversion

= 0.121 m^2

Surface Area of the stainless steel tubing used for the LN2 heat exchanger

One length across the vessel diameter and one loop around the inside vessel wall area is subtracted where the braids mount to the cooling tube

= [(1 inch tube diameter * π * 24 inch length across vessel) +
(1 inch tube diameter* π)*(22 inch tube bent diameter* π- 10 braids*0.625 inches)) *
$[(2.54 \text{ cm/inch})/(100 \text{ cm/m})]^2$ unit conversion

= 0.176 m^2

Stefan-Boltzman constant = 5.67e-8 $W/m^2.K^4$
T_1 temperature of the inside of the imager vessel = 293 K for the nominal case.
T_2 temperature of the heat exchanger = 100 K in the nominal case.
Emissivity = The cold surfaces such as the stainless steel cooling tube and the copper braids are assumed to have an emissivity of 0.25. The warm surfaces such as the interior of the stainless steel vessel are assumed to have an emissivity of 0.25. The effective emissivity for the two surfaces is calculated as

$e_{eff} = 1/(1/e_{cold}+1/e_{warm} -1)$, e_{ff} for infinite parallel planes
= 1/(1/0.25 + 1/0.25 -1)
=0.143

Q = 0.297 * 0.143 * 5.67e-8 * (293^4 -100^4) = 17.5 W 20 C ambient, -173 C heat exchanger temp
Q = 0.297 * 0.143 * 5.67e-8 * (268^4 -100^4) = 12 W -5 C ambient, -173 C heat exchanger temp
Q = 0.297 * 0.143 * 5.67e-8 * (300^4 -100^4) = 19 W 27 C ambient, -173 C heat exchanger temp

Multilayer insulation wrapped around the cooling tube can significantly reduce the heat load. Assuming that the insulation is wrapped between copper lugs, the effective surface area is reduced by about 60% and so the heat load is reduced by 60%.

Reduction in surface area due to MLI

R = Area of heat exchanger covered by MLI / total surface area of heat exchanger
= Area of exposed cooling tube / total area of heat exchanger
= 0.176 m^2 / 0.297 m^2
= 0.6

$Q = 0.297 * 0.143 * 5.67e\text{-}8 * (293^4 - 100^4) = 17.5\ W * (1 - 0.60) = 7$ Watts,
20 ºC ambient, -173 ºC heat exchanger temp

$Q = 0.297 * 0.143 * 5.67e\text{-}8 * (268^4 - 100^4) = 12\ W * (1 - 0.60) = 4.8$ Watts,
20 ºC ambient, -173 ºC heat exchanger temp

$Q = 0.297 * 0.143 * 5.67e\text{-}8 * (300^4 - 100^4) = 19\ W * (1 - 0.60) = 7.6$ Watts,
27 ºC ambient, -173 ºC heat exchanger temp

Conductivity through the heat exchanger supports

The heat exchanger's 1 inch diameter stainless steel tube is supported off of the plumbing feed throughs and requires direct mounts to the vessel walls. G-10 Spacers are used to prevent direct contact between the heat exchanger and the imager vessel walls. Conduction through the spacers is calculated.

Length of a spacer = 0.0063 meters (0.25 inches)
Size of spacer = 0.00317 meters (0.125 inch) x 0.00635 meters (0.25 inch)
G-10 Cross Sectional Area in one spacer = 2 E-5 m^2
Integrated, thermal conductivity κ, of G-10 = 0.42 W/m.K
Temperature change from 20ºC to -173 ºC = dT = 193 ºC

$Q = \kappa * A * dT / L$
$Q = 0.42 * 2E\text{-}5 * 193 / 0.0063 = 0.26$ Watts per spacer
Q for 4 spacers = 1.0 Watts

Reference : NIST, Thermal Conductivity of G-10, Cryogenic Material Properties Database, E.D. Marquardt, J.P. Le, and Ray Radebaugh

Total Heat Load Input into the Heat Exchanger

Table 1. Summary of heat Loads

Item		Cold Night CCD Temp. **-100 ºC** Ambient **-5 ºC**	Design Case CCD Temp. **-100 ºC** Ambient **20 ºC**	Warm Night CCD Temp. **-100 ºC** Ambient **27 ºC**
Focal Plate	Thermal Radiation	27.2 Watts	37.7 Watts	43.0 Watts
	Conductivity Supports	0.48 Watts	0.52 Watts	0.67 Watts
CCD Electronics	Conductivity cables	7.6 Watts	9.6 Watts	10.3 Watts
	CCD JFET (70 CCDs)	0.6 Watts	0.6 Watts	0.6 Watts
	CCD ouput amplifier (70 CCDs)	2.8 Watts	2.8 Watts	2.8 Watts
	VIB Interface Card Amps.	28 Watts	28 Watts	28 Watts
Thermal Control	Trim Heaters	30 Watts at -100C* 40 Watts Max	23 Watts at -100C* 40 Watts Max	19 Watts at -100C* 40 Watts Max
Heat Exchanger	Radiation	4.8 Watts	7 Watts	7.6 Watts
	Conductivity Supports	1.0 Watts	1.0 Watts	1.0 Watts
Imager Total		**112 Watts**	**127 Watts**	**134 Watts**

* The Copper braid cross sectional area can be adjusted as needed to change the required amount of power in the trim heaters at a given operating temperature.