Fermilab

Particle Physics Division
Mechanical Department Engineering Note

Number: MD-ENG-126 Date: 6-18-2007

Project Internal Reference:

Project: NOvA (Off axis neutrino detector)

Title: NOvA Block Pivot Table

Author(s): Dave Pushka

Reviewer(s):

Key Words: Structural Calculations, NOvA, Block Pivoter, Block Raiser

Abstract Summary: The block pivoter (NOVA-doc-989) performs several functions during the installation process. First, the pivoter provides a flat surface for block assembly, including alignment fixtures and tooling to ensure that each block meets dimensional requirements. Second, it moves each completed block from the assembly area to the detector face. Third, the pivoter rotates the assembled block from the horizontal to a near vertical orientation and moves it approximately 9 meters to place it in the correct location in the detector. Finally, the pivoter rotates the block the last few degrees into a vertical orientation and then lowers the block and pallet approximately 2 to 3 centimeters onto the floor. When the detector installation is complete, the block pivoter is permanently installed against the last block to serve as the north bookend. The requirements for the block raiser are described in NOVA-doc-113

Applicable Codes: AISC 9th Edition Allowable Stress Design

17.13 Block Pivoter

This engineering note was prepared and used in chapter 17 of the NOvA technical design report. For simplicity, the paragraph and figure numbering scheme used in the TDR chapter is used verbatim here.

17.13.1 Block Pivoter General Configuration

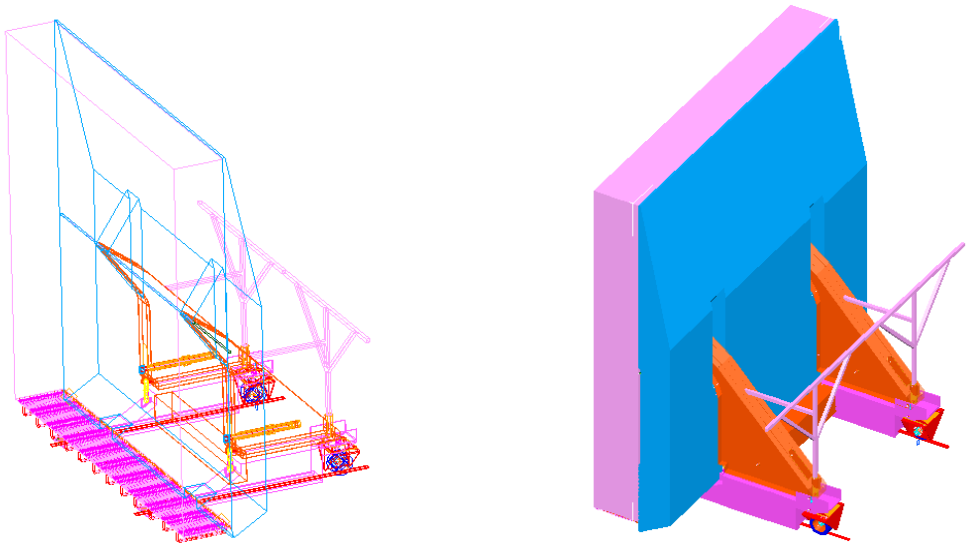

Fig. 17.125: Two isometric views of the block pivoter table shown in the vertical position.

In Figure 17.125, the block is shown in violet, the block pivoter table is in blue and the structure that supports the pivoter table is shown in orange and purple. The pink structural steel shown above the drive wheels is provided to limit the table deflection when the table is in the horizontal position.

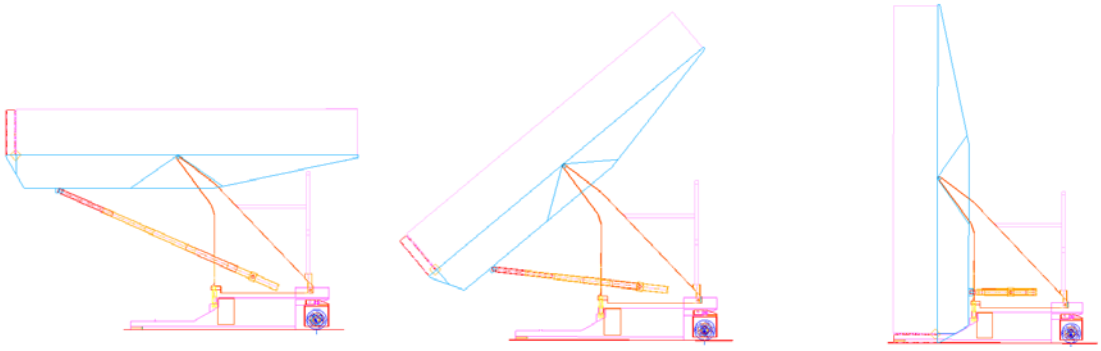

Fig. 17.126: Three side views of the block pivoter showing the block in the horizontal, intermediate, and vertical positions.

17.13.2 Block Pivoter – Detector Assembly Table

The above images of the block pivoter show the detector assembly table as a solid object for the simplicity of rendering the images. However, the detector assembly table will be fabricated from steel plate to provide a flat, relatively rigid surface for assembling the detector on, and at a minimum expense. Figure 17.127 below shows an image of the block pivot table as viewed from below to show the plate structure. The upper surface and each of the webs are made from ¼" thick carbon steel plate. A structural grade material, ASTM A36 low alloy carbon steel, is suitable for this application because the deflections dominate the design criteria and not the overall strength. Higher strength steels will have the same deflection as A36, but will cost more to procure. The lower cord of the weldment is 3/8" thick, 12 inch wide A36 bar stock. The open structure allows access to the bottom of the top surface and the webs for welding.

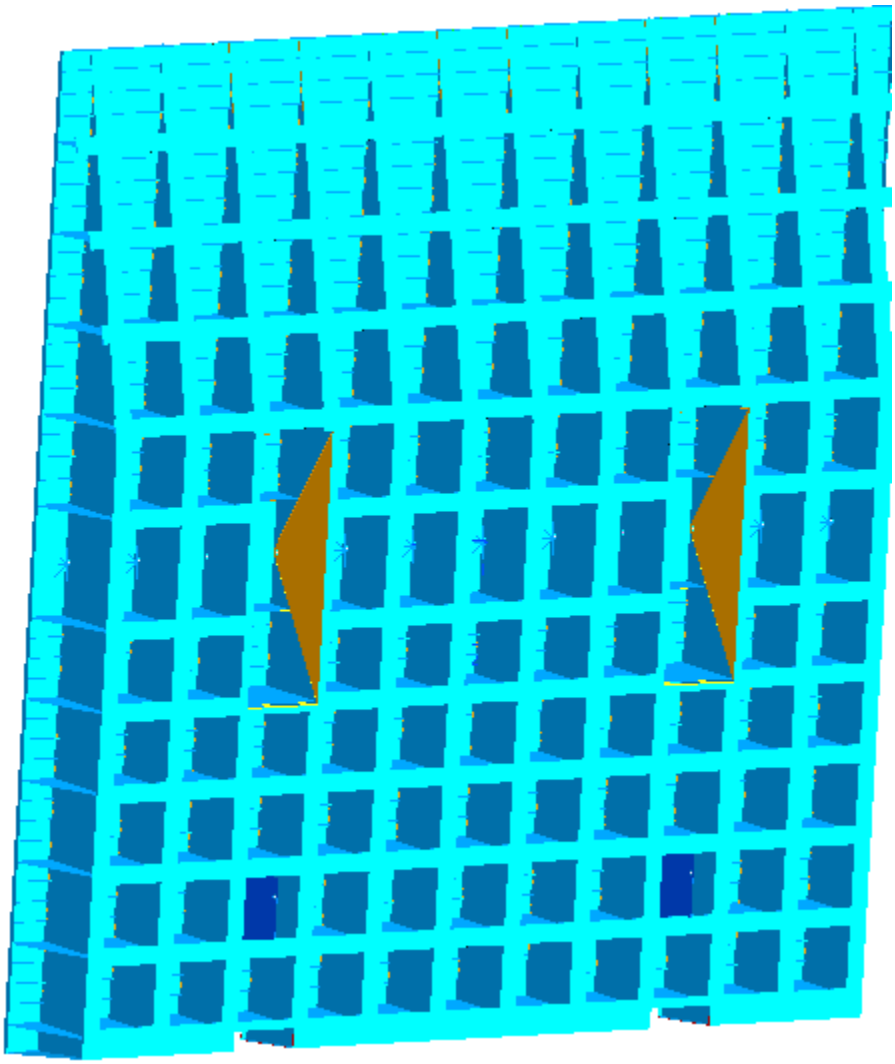

Figure 17.127 Block Pivot Table View of the Table Bottom Surface when Table is Near Vertical to Show the Weldment Structure

In the above image, the two rectangular areas shown with the orange triangles are the locations where the arms of the upper vertical side supports fit into the table to allow the pivot location to be near to the top (when table is horizontal) surface. The two small cut-outs near the

bottom edge are provided to allow clearance for the lower table support arms that allow rolling elements to be positioned under the assembled block for stability.

The top surface of the assembly table, when the table is horizontal, is 620 inches wide. When the able is vertical, it is 640 inches tall. Clearly, this exceeds the normal shipping dimensions, so the table will be made from 12 sections. Figure 17.128 depicts the table in a exploded view to show these sections. Two sections will be joined in the shop into an assembly approximately 104 inches wide, 60 inches tall, and 53.3 feet long. Weight of each two section assembly will be less than 20,000 pounds. Six truck loads will be required to transport the table sections to the far detector sight.

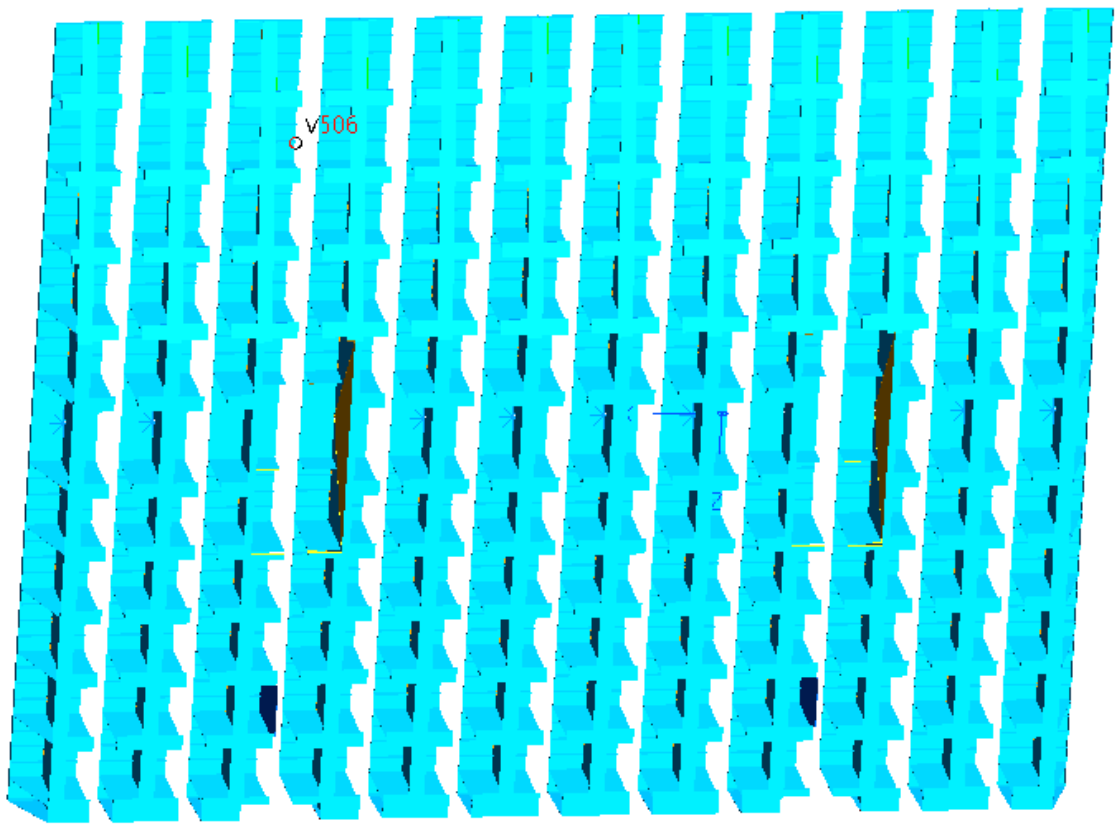

Figure 17.128 Block Pivot Table View of the Exploded View to Show the Individual Weldments

Each of the weldment sections shown in the above figure will be shop fabricated using the same techniques used to fabricate bridge girders used in highway overpass construction. This is a mature technology using standard welding practices and common low alloy carbon steel. The cost estimate for this table includes line item costs for the welding fixtures needed to achieve the required flatness of each weldment. FEA modeling of one weldment has been performed and the deflections are shown in Figure 17.129. This analysis was performed using symmetric boundary conditions and a uniform pressure applied to the top surface of the detector of 0.82 psi. This pressure is the pressure that would be uniformly applied to the top surface of the table by the fully assemble detector block assuming that the PVC block has no stiffness. As such, this is a very conservative loading condition and over predicts the deflection and stresses on the table.

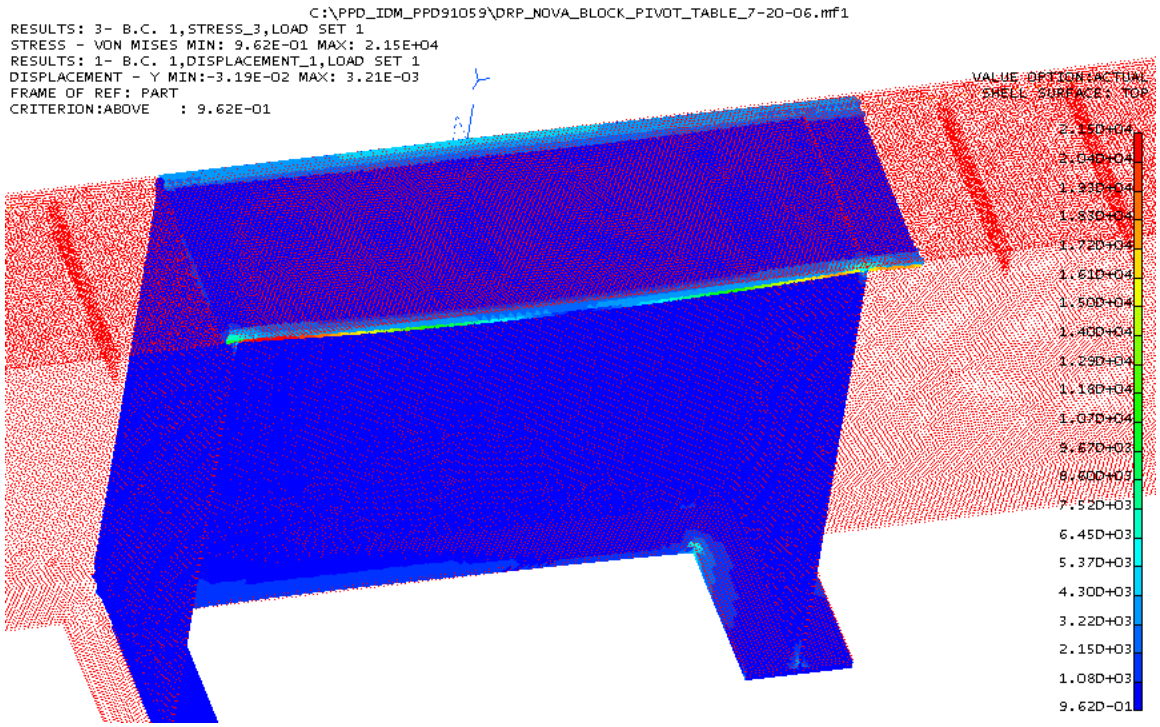

Figure 17.129 Block Pivot Table FEA Deflection Results for loading on one Weldment

17.13.3 Block Pivoter – Pivoting Hydraulics

Figures 17.126 and 17.131 show the hydraulic cylinders used to push the pivoter table into the horizontal position. These cylinders retract to allow the table to pivot into the vertical position. The figure shows that the pivot bearing is positioned very close to the top (when horizontal) of the assembly table.

There are several important considerations in the overall layout of the block pivoter:

- To provide a moving structure that is inherently stable and not prone to tipping.
- To place the pivot location as close as is possible to the center of gravity of the assembled block and table to reduce the loading during rotation.
- To shop fabricate the block pivoter components, preassemble and test the pivoter, partially disassemble the device and ship the components to the far detector location using commercial trucking. All components are designed to break down into parts that are easily shipped and are within the lifting capacity of the crane at the far detector.

Stability of the block pivoter structure is maximized in several ways. First, the structural support (shown in purple in the Figures 17.125 and 17.126) is extended forward to the front side of the block (when the block is vertical) to maximize the wheel base and therefore the stability. Second, the maximum velocity of the pivoter is limited so that even if the loaded table were to stop immediately while moving at maximum velocity, the pivoter would not tip.

Two multistage, double acting, hydraulic cylinders control the rotation of the block pivoter table. These cylinders are commercially produced by several manufactures and are available in strokes and capacities in excess of those needed for this application. The compressive load is shown as a function of cylinder extension in Figure 17.130.

When the block is fully assembled on the table and the table is horizontal, the cylinders exert a combined axial force of 25 tons. As hydraulic fluid is allowed to exit the cylinders and

the table rotates, the axial force peaks at about 31 tons (15.5 tons per cylinder), returning to a combined value of 25 tons when the table is fully vertical. This is shown as the purple line at the top of Figure 17.130.

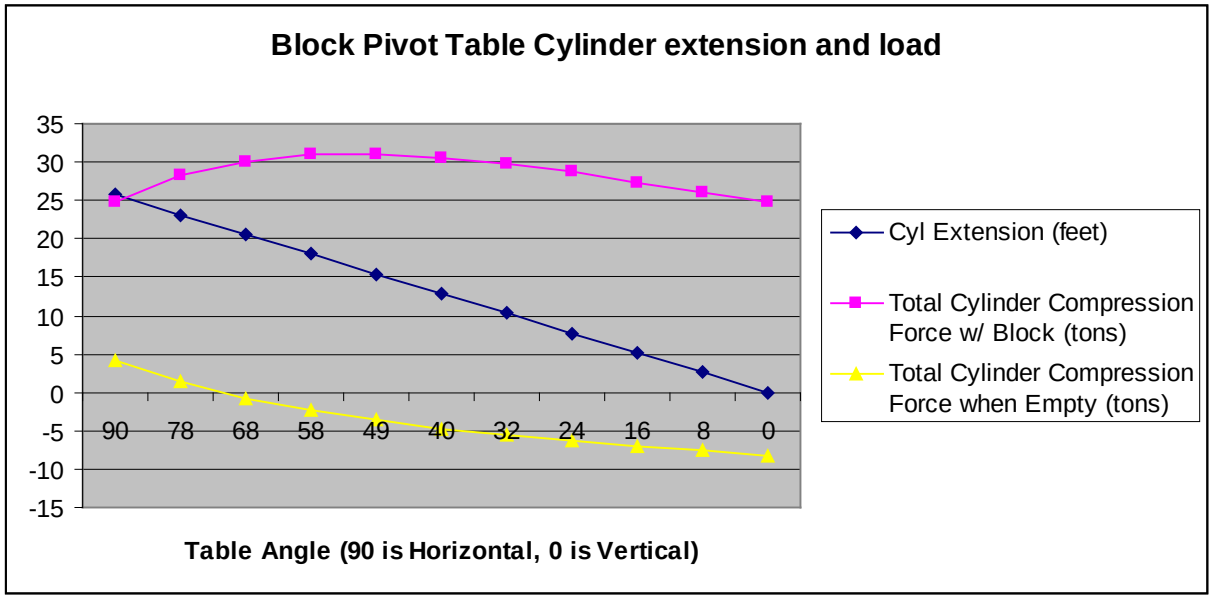

Fig. 17.130: Hydraulic cylinder extension (feet) and compressive load (tons) for the pivoter design using two cylinders and a pivot location near the block center of gravity.

As the block is lowered onto the concrete detector hall floor, the load on the hydraulic cylinders changes sign to become a tensile load. When the table is vertical and unloaded, the combined axial load on the cylinders is 8.3 tons in tension. This is why double acting cylinders are necessary. As fluid is pumped into the cylinders to allow the table to rotate to the horizontal position, the load steadily increases until reaching a maximum value of about 5 tons compression. As each module is positioned during block assembly, the load on the pivoter table rotation cylinders increases until it reaches 25 tons with the block fully assembled.

Figure 17.131 shows a detail of block pivoter table hydraulics with the key components labeled. The table is shown in the near vertical orientation and both of the table rotation cylinders can be seen, although the second cylinder is partially obscured by the orange table support structure. Also visible is one of the two kneeling cylinders that lowers the entire table and block as the block is set down on the detector hall floor.

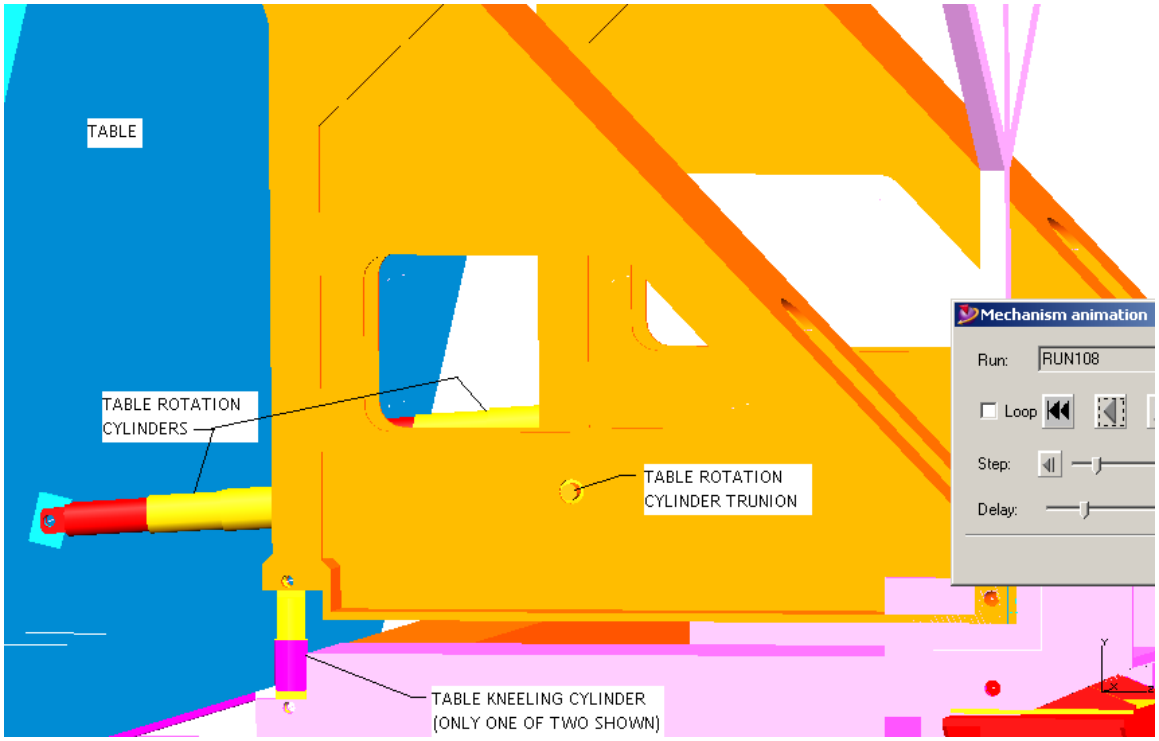

Fig. 17.131: Detail of the block pivoter showing the table approaching vertical, highlighting the table rotation cylinders and one table kneeling cylinder.

When the block is rotated to the vertical position, its weight is supported by the block base pallet, which is cantilevered from the block pivoter table surface. The pallet is shown in Figure 17.133. Each block has its own dedicated pallet that remains with the block until detector decommissioning. The gaps below the pallet surface provide space for the pivoter's front support legs (Figure 17.125). They also serve as witness spaces so that any scintillator leaks from the modules can be observed and perhaps located. Irregularities in the detector hall floor are accommodated by setting each pallet in place on a grout bed and leveling it before attaching it to the pivoter and beginning block assembly.

17.13.3 Block Pivoter Propulsion Drive

Figure 17.132 shows the mechanism used to move the pivoter along the hall from the assembly area to the detector face. Hydraulic motors driving a planetary gear drive, directly attached to a solid urethane wheel, provide the traction effort to move the loaded block pivoter down the length of the detector hall. These commercially produced drive units are similar to those used on large earth moving equipment. The chief advantage of these units is that they can propel very heavy loads at steady but slow speeds. The disadvantage of these units is that the lead time to procure them is on the order of twelve months. Spare parts are available off the shelf because of the demands of the construction industry. Two units are used, one driving each side of the pivoter.

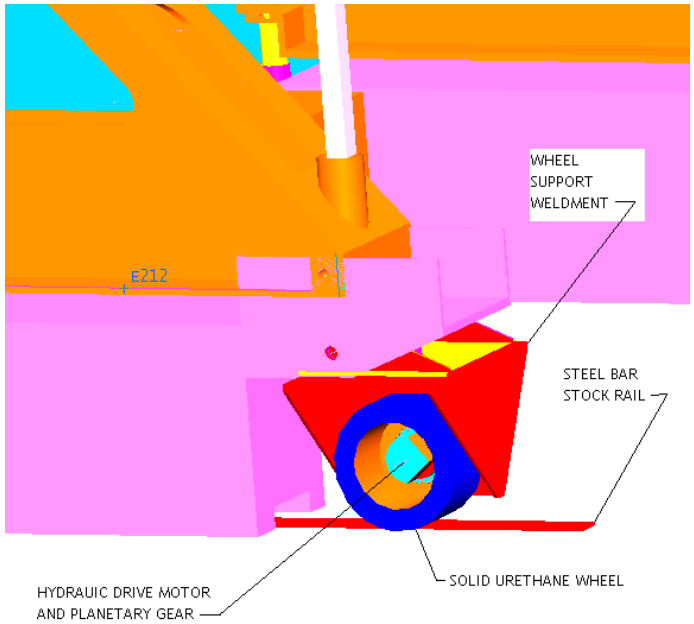

Fig: 17.132: Detail of block pivoter drive wheel mounting and hydraulic drive motor.

The pivoter moves on Hilman rollers for the non-driven rolling elements. These rollers include cam followers to allow the pivoter to follow the flat bar-stock rails. Hilman rollers are available in capacities above 300 tons, although 100-ton capacity units are used here. On each lower side support, one roller is located at the tip of the extension of the lower side support. For stability reasons a second roller is located directly below the kneeling cylinder.

17.13.4 Block Pivoter – Detector Support Pallet

Each detector block will rest on a detector support pallet when installed in its final location in the detector hall. Prior to stacking the extrusions for each block, the pallet will be located in its final position on the detector hall floor, grouted to accommodate irregularities between the detector hall floor and the steel pallet weldment. Once the grout has cured, the pallet will be lifted off the grout with the block pivot table, the table rotated to the horizontal position, taking the pallet to the vertical position, and moved to the detector assembly area.

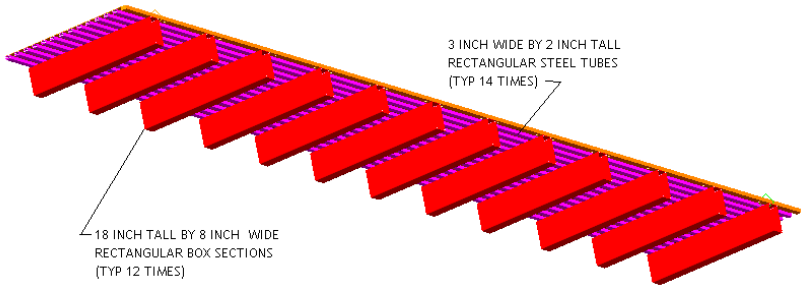

Fig. 17.133: Bottom view of a pallet with twelve 18-inch deep by 8-inch wide box beam cantilever members and fourteen 3-inch by 2-inch transverse stringers.

Cantilevering the pallet from the block pivoter table introduces a moment into the table, causing a rotation. This rotation over the width of the pallet and the deflection of the pallet (cantilevered beam deflection) have been quantified and shown to induce an acceptable level of stress into the PVC extrusions in a block (NOVA-doc-xxxx). Figure 17.134 shows the result of a finite element analysis of the combined table and cantilevered pallet. Beam elements were used to model a 72-inch deep table and twelve 18-inch deep pallet members. Since twelve pallet members were used, the load applied to each member was 313,000 / 12 pounds (26,100 pounds). The calculation applies this load at a point in the center of the cantilevered pallet and assumes that the block has no stiffness. This conservative assumption gives an upper limit on the tip deflection.

In Figure 17.134, the dashed purple line represents the deformed shape of the table and cantilevered pallet. The green lines indicate the original shape while the orange line segments indicate the beam elements. (The red dimension lines are artifacts remaining from the geometry creation.) Note that the deflection of the vertical purple line representing the table is nearly indistinguishable from the original geometry.

This result indicates that the block pivoter design, with very deep members for the table and a pallet supported by 18-inch deep tubes, meets the block deflection criteria established to prevent damage to the vertical module end seals during block rotation (NOVA-doc-xxxx).

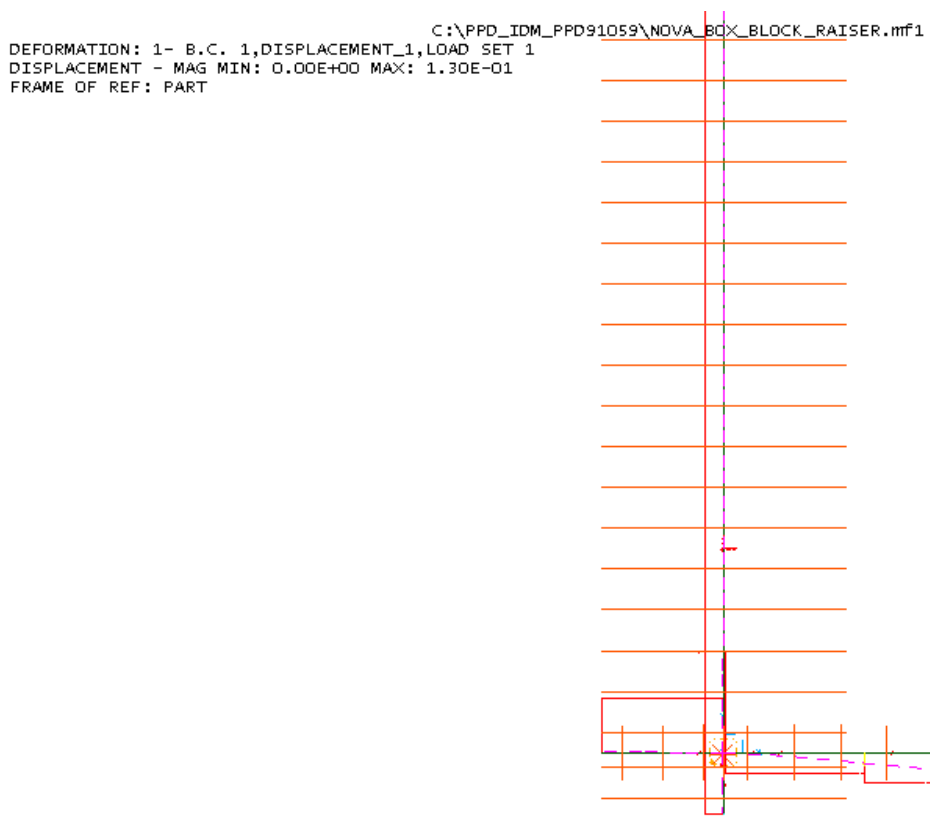

Fig. 17.134: Results of the FEA calculation of the deflection of a plate structure block raiser table and cantilevered pallet. The deflection at the edge of the pallet is 0.13 inches.

The 3 inch by 2 inch box sections between the 18-inch deep members also deflect when loaded by the detector weight. Figure 17.135 shows the deflection for the empty-block case under the assumption that the detector has no stiffness. The deflection is calculated to be 0.028 inches by the FEA and 0.024 inches using hand methods. While this deflection may be

acceptable for the empty condition, the estimated maximum weight of a filled block is 1.2 million pounds. This gives a linear loading of 137 pounds per inch. Resulting stresses would be about 13 ksi and deflections would approach 0.1 inch. *This deflection may not be acceptable and may require the box section depth to be increased an inch or two. This analysis remains a work in progress.*

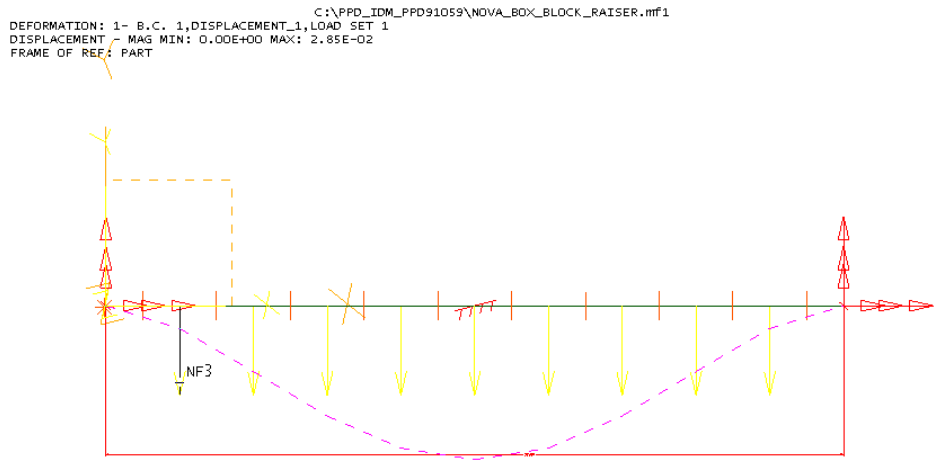

Fig. 17.135: Deflection of the transverse 3 inch by 2 inch stringer between each 18 by 8 box beam on the pallet due to a uniform 36 pounds per linear inch load. The total deflection is 0.028 inches.

17.13.5 Block Pivoter – Upper Table Support Weldment

The upper structural support (Figure 17.136) has been analyzed using Ideas and the results are shown as a screen-capture image in Figure 17.137. There are two upper side support members which transfer the weight of the table and the assembled block to the lower side support members. A 300,000 pound vertical load was applied to the table pivot bearing and vertical restraints were applied at the kneeling cylinder and rear cylindrical bearing. This 300,000 pound load is a conservative estimate of the combined table (150,000 pounds) and block weight (313,000 pounds) shared between two upper side supports. Stresses in the side support are less than 10,000 psi and the deflection at the bearing is approximately 0.2 inches. This weldment weighs about 32,000 pounds, which exceeds the capacity of the 10-ton bridge crane in the far detector hall. However, there are ample opportunities to remove superfluous material to reduce the weldment weight to less than 10 tons. The stresses and the deflections for a conservatively estimated load are acceptable.

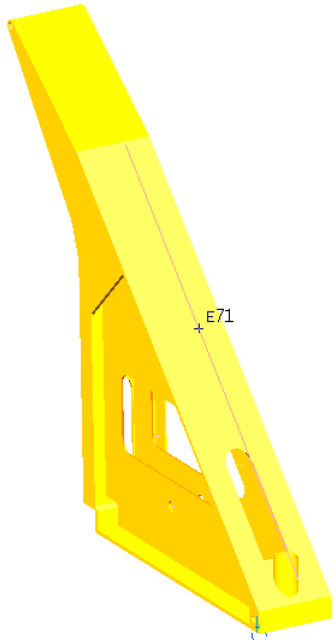

Fig. 17.136: Block Pivoter Upper Side Support Weldment as viewed from the rear quarter.

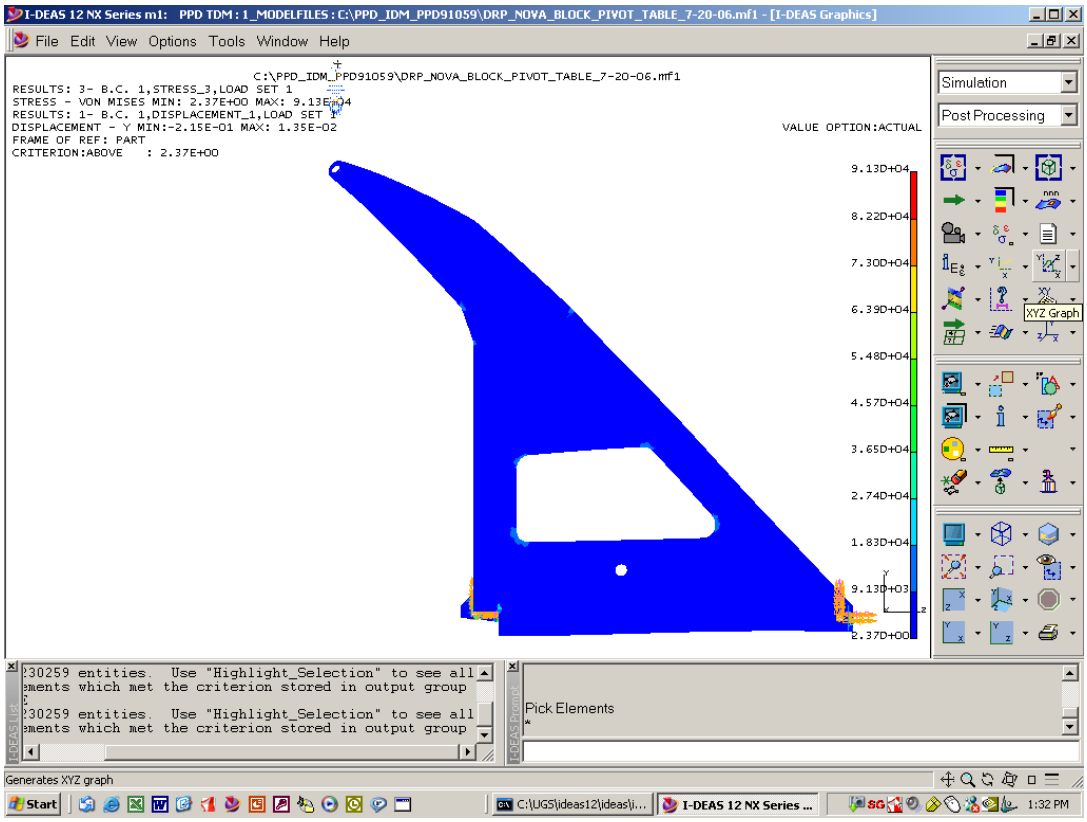

Fig. 17.137: Analysis Image of the Upper Side Support Stresses and Deflection.

17.13.6 Block Pivoter Lower Table Support Weldment

The lower structural support is shown in Figure 17.138. This part transfers load from the upper structural support to the Hilman rollers and the hydraulic drive unit. The narrow portion shown in the lower left corner of Figure 17.135 extends below the table and pallet to ensure the stability of the entire loaded block pivoter.

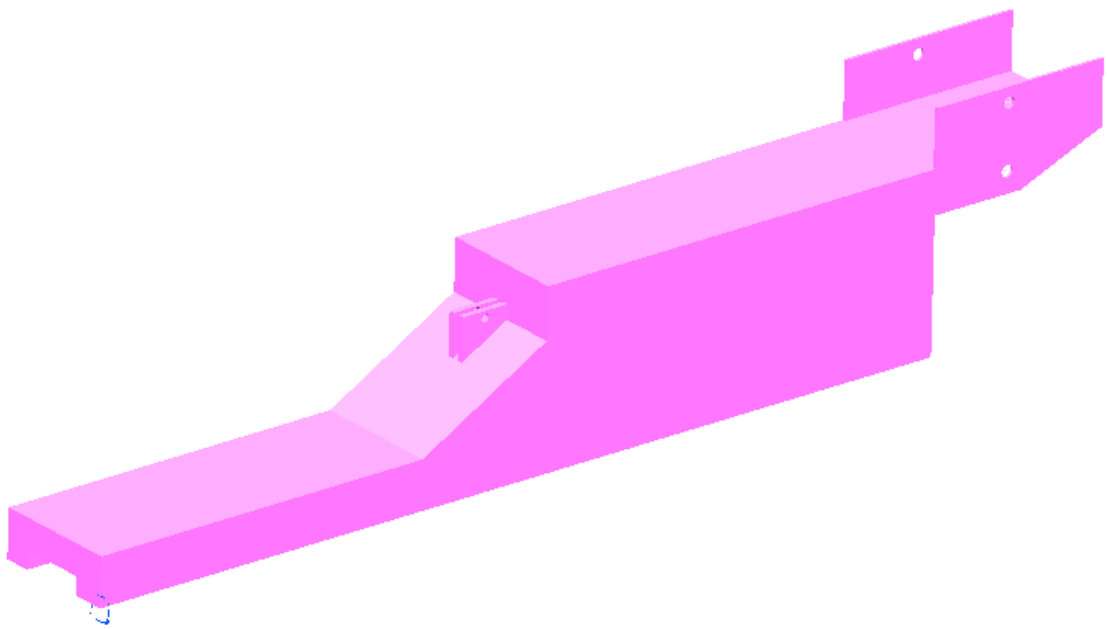

Fig. 17.138: Block Pivoter Lower Structural Support.

Figure 17.139 show the results of an FEA analysis of the Lower Structural Support. This analysis was performed using a half section of the part and applying symmetric boundary conditions. The results indicate that the high stress region corresponds to where the kneeling jack applies it load while the bulk of the structure is very lightly stresses and the deflections are minimal. Each of the two lower structural supports currently weighs about 16,000 pounds (8 tons). Results of the analysis indicate that some of this weight can be removed by making the sections thinner, saving cost. However, optimizing the lower structural support is not an urgent design task as the design presented here works satisfactory and meets the shipping and installation requirements.

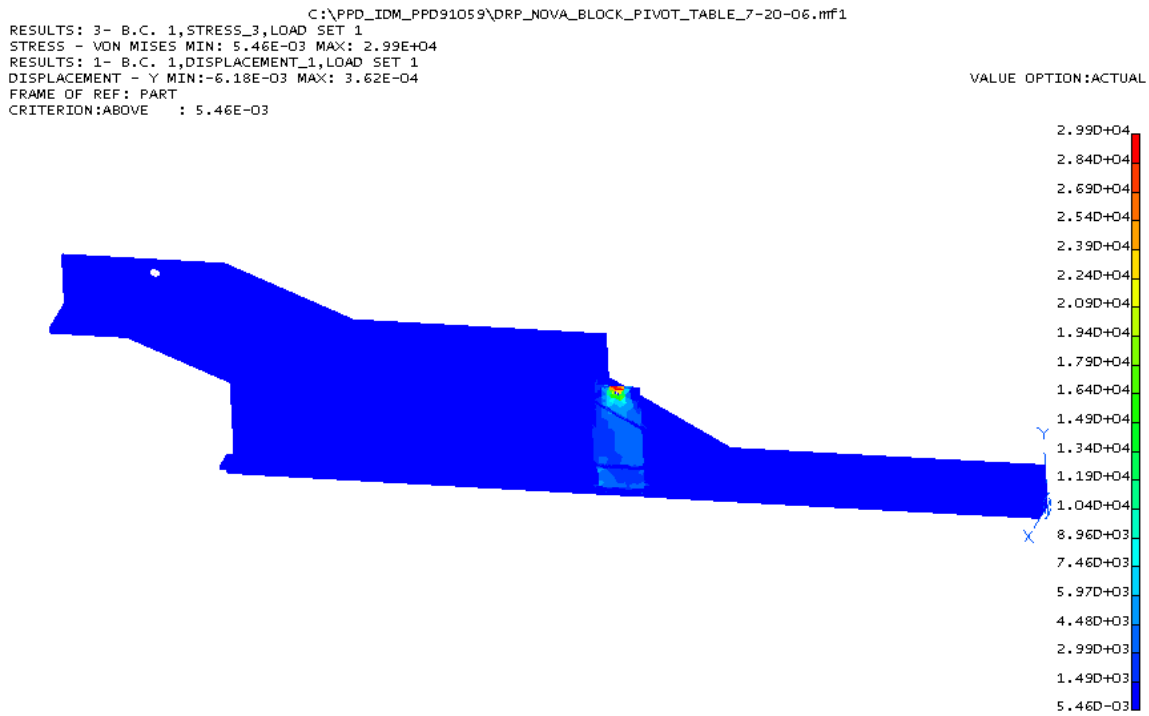

Figure 17.139 Analysis Image of the Lower Side Support Stresses and Deflection.

17.13.7 Block Pivoter Rear Table Support

The deflection of the detector assembly table can be minimized during the detector assembly by supporting the back end of the table when it is in the horizontal position. A simple structure provides this support and is shown in figures 17.125, 17.126 and 17.140 This structure is fabricated from ordinary steel box sections ASTM A500 material and serves to limit the table bulk deflection changes while a block is being fabricated.

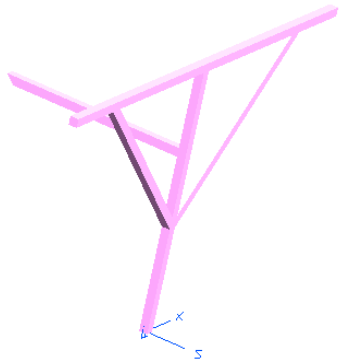

Figure 17.140 Image of the Rear Table Support

17.13.9 The North Bookend

The second (north) bookend provides a strong, flat surface against which the final detector block rests. Its mechanical strength requirements are the same as those for the south bookend.

After the detector assembly has been completed, the block pivot table will be converted to a stationary object serving as the north bookend. The majority of the block pivot table will remain intact, with only the hydraulic cylinders disconnected and replaced with rigid structural members and the vertical loads transferred from the rolling elements to permanent cribbing.

Since the vertical side supports shown on figure 17.136 is not sufficient to transfer all of the horizontal load from the north bookend to the floor, additional structural steel column sections will be attached to the back side of the block pivot table and anchored to the building floor. See figure 17.141:

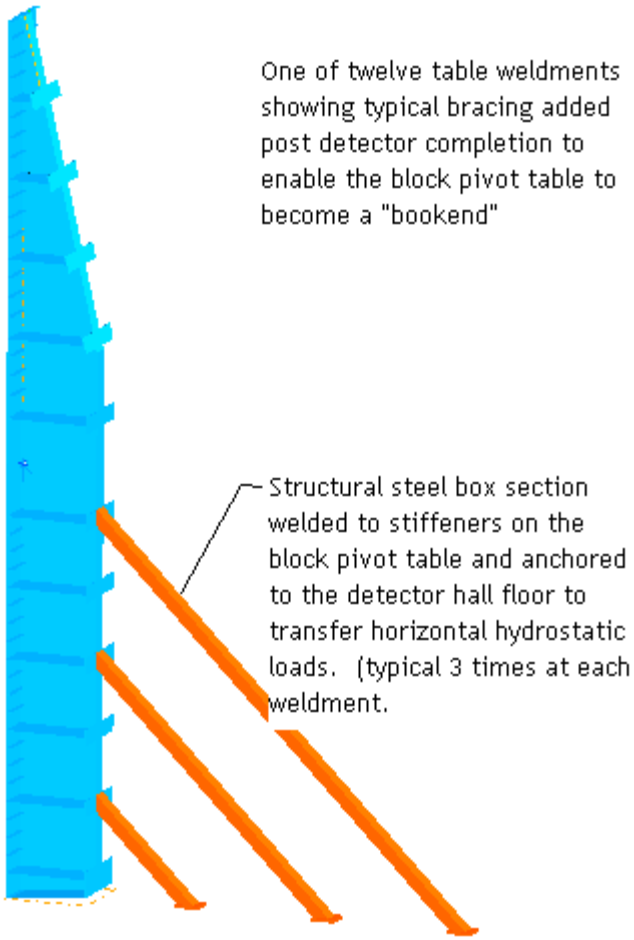

Figure 17.141
Section thru a portion of the block pivot table showing the additional bracing needed to achieve the requirements of the bookend.

The north bookend consists of the block raiser, which is permanently installed and braced with additional structures to support it against the floor and walls of the detector building. The north bookend is installed by the WBS 2.9 assembly crew. WBS 2.9 is responsible for the design and fabrication of the additional bracing structures. WBS 2.1 provides the anchor points for these structures.

17.13.9 Block Pivoter General Parameters

Table 17.17 summarizes the most important parameters of the block pivoter.

PVC Extrusion Block Weight (estimated based on nominal extrusion)	313,000 pounds
Pivot Table Weight (estimated)	150,000 pounds
Depth of Pivot Table	6 feet
Distance from Table Surface to Pivot centerline	4 inches
Vertical Distance from Pivot to Cylinder Centerline (table vertical)	216 inches
Vertical Distance from Assembly Table top to Floor (table horizontal)	317 inches
Maximum Vertical Distance from Floor to top corner of 31 plane block (at nominal dimensions) when pivoting	651 inches
Lower Structural Support Weight (per unit – two units used), estimated	30,000 pounds
Upper Structural Support Weight (per unit – two units used), initial design, not final.	32,000 pounds
Pivot Bearing Size and Type	4” Plain Spherical
Pivot Bearing Capacities (static and dynamic), pounds, each	533,000 static, 173,000 dynamic
Number of Pivot Bearings Used	4
Forward Roller Capacity, metric tons	100 metric tons
Forward Roller Load, tons (estimated)	96 short tons
Pallet Weight (estimated)	10,000 pounds
Depth of Pallet	20 inches
Deflection of Pallet between18” by 8” members with empty block	0.028 inches
Deflection of Pallet between 18” by 8” members with full block	0.1 inches
Deflection of Pallet Cantilever with empty block	0.13 inches
Hydraulic Cylinder closed Length	76 inches
Hydraulic Cylinder Length when Table is Horizontal	309.02 inches
Kneeling Cylinder Load (with block on table), estimated	180 tons
Kneeling Cylinder Load (without block), estimated	70 tons

Table 17.17: Summary of block pivoter parameters.

Dave Pushka's Block Raiser (Pivoter) calculations for the top table made from plate steel:

Initial Guesses:

Calculated weight of table + block	426,979	pounds		
Required Distance from pivot to table c.g. if the table is to balance the block when the block is vertical	5.9	inches		
Required thickness of table assuming homgenous	19.7	inches		
Table Dimensions and Thicknesses:				
Thickness of Table Top Plates	1/4	inches		
Thickness of table bottom plates	0.25	inches	6.35	
Thickness of table vertical shear webs	0.25	inches		
No. of shear webs in the beam direction	12			
No. of shear webs perpendicular to the beam direction	12			
Distance between shear webs in beam direction	3.500	feet	42.000	inches
Distance between shear webs perpendicular to the beam direction	3.500	feet	42.00	inches
Thickness of table shear plates in the vertical direction when horizontal	5	feet		
Weight of Table Top in pounds per square foot	10.208	pounds per square foot		
Weight of Table Bottom in pounds per square foot	10.208	pounds per square foot		
Weight of shear webs in pounds per square foot	10.208	pounds per square foot		

PLATE GIRDER CALCULATIONS PER AISC 9th Edition ASD Chapter G

Web Slenderness Limitations:

limiting slenderness ratio = 970/sqrt(Fy)

slenderness ratio, h/tw =	240
970 / sqrt(Fy) =	161.7

240 is greater than 161.7, therefore, this is considered a plate girder

Transverse stiffeners are provided spaced less than 1.5 times the distance between the flanges

From Formula G1-2, h/tw < 2000/sqrt(Fyf)

Fyf is the yield strength of the flange material which is 36 ksi.

sqrt(Fyf)	6

h/tw < (2000/sqrt(Fyf))

slenderness ratio, h/tw =	240
2000/sqrt(Fyf) =	333.3

240 < 333.3, therefore the slenderness ratio is okay as the transverse stiffener location is fine.

Allowable Bending Stress:

Fb' < Fb * Rpg * Re from formula G2-1

Fb is the allowable bending stress from Chapter F, in ksi

Fb = 0.6 * Fy	21.6	ksi

Rpg = 1 - 0.0005*(Aw/Af)*[(h/t)-(760/sqrt(Fb)]< 1.0

h/t = 60 / 0.25	240
760/sqrt(Fb) = 760/Sqrt(.6*36) =	163.5

Aw = Area of the web = .25* 60	15	
Af = Area of the flange = 0.25*42	10.5	
Aw/Af =	1.43	
760/sqrt(Fb) =	126.7	
Rpg = 1 - 0.0005*(Aw/Af)*[(h/t)-(760/sqrt(Fb)] =	0.919	this is less than 1.0 therefore okay
Re = (12+(Aw/Af)*(3a-a^3))/(12+2*(Aw/Af))		
a = 0.6 Fyw/Fb	0.6	
Re = (12+(Aw/Af)*(3a-a^3))/(12+2*(Aw/Af)) =	0.96	
Fb' < Fb * Rpg * Re from formula G2-1=	19.06	ksi

Allowable Shear Stress with Tension Field Action:

Fv = Fy/2.89*(Cv)		
Cv = 45,000*kv/Fy(h/tw)2		
a	71.5	
h	60	
a/h =	1.19	
(a/h)^2	1.42	
kv = 5.34 +4.0/(a/h)^2	8.16	
Cv = 45,000*kv/Fy(h/tw)2 =	0.1770131	
Fv = Fy/2.89*(Cv) =	2.205	ksi

Actual Shear Stress:

Shear Area = 12*60inches*.25 inches =	180	sq. inches
Load (assumes cantilevered block and table)	213,489.72	pounds
Shear Stress =	1,186.05	psi

Actual Shear Stress is less than the allowable shear stress, therefore, OK.

Actual Bending Stress:

Moment of Inertia:		
Top flange width	52	inches
Top flange depth	0.25	inches
Top flange, 52 by 0.25, area, in2	13	sq. in
Bottom flange width	12	inches
Bottom flange depth	0.375	inches
Bottom Flange, 12 by .375 area, in2	4.5	sq. in
Web depth	60	inches
Web thickness	0.25	inches
Web, 60 by .25 area, in2	15	sq. in
Sum of the areas, in2	105.125	sq. in
Inertia for the flanges per AISC 9th, pg 6-19		
Area, A (in2)	28	sq. in
c	9.77	inches
y	9.65	inches
c1	50.85	inches

y1	50.67	inches
Moment Inertia for the flanges per AISC 9th, pg 6-19	12762	in^4
Moment of Inertia for the web	4500	in^4
	17262	in^4
Location of N.A. of combined Section	12.79968044	
Moment of Inertia calculated by Ideas	18,424	in^4
Cantilever Section Bending Moment:	26,082	pounds on one weld ment
length of cantilever	328	inches
w	19.88	pounds per inch inch
Max moment = wl^2/2	1069346	pounds
Top flange Bending Stress = My/I	560	psi
Bottom flange bending stress = My/I	2941	psi
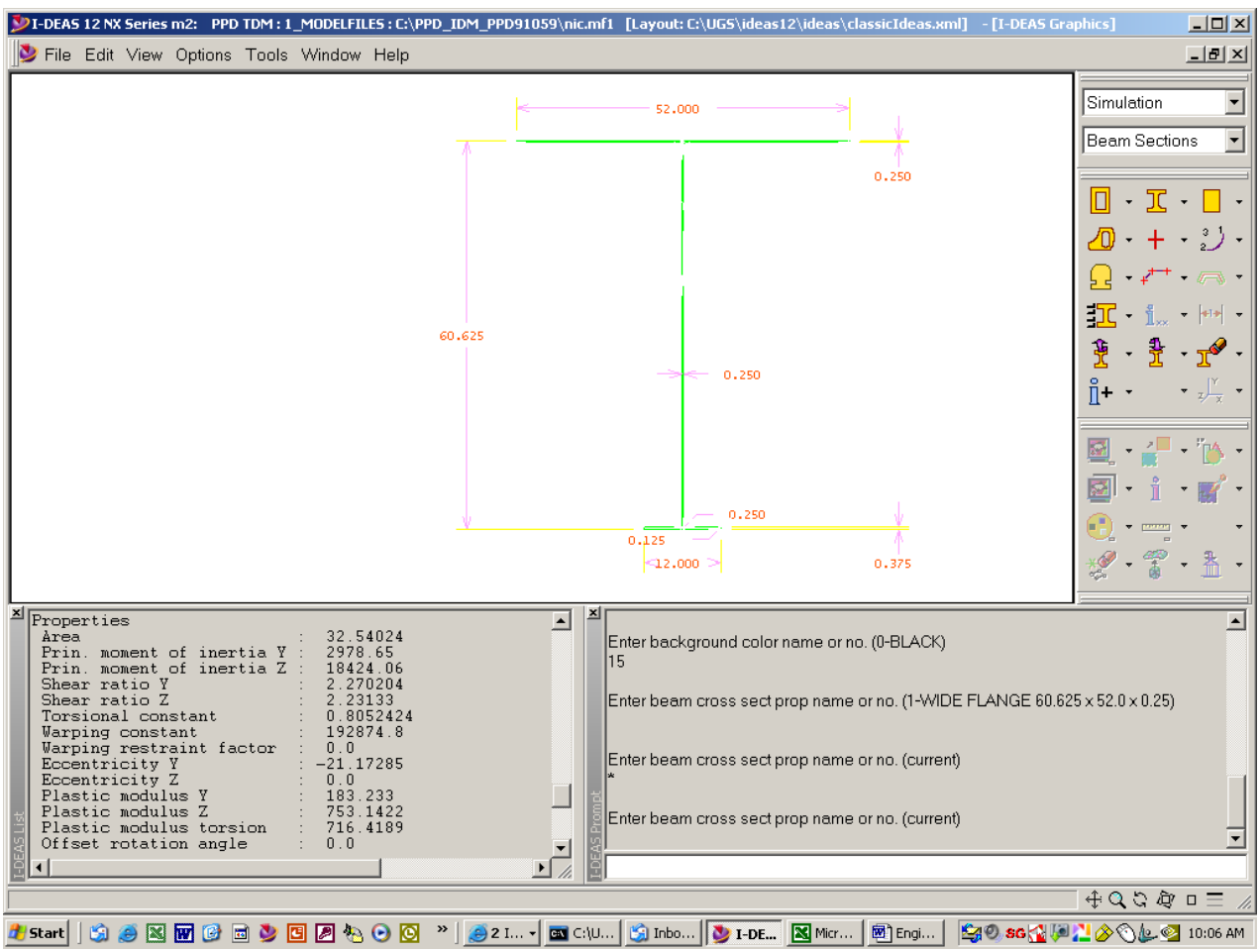
Bending Stresses are significantly less than the allowable bending stresses calculated using the AISC formula.