5022TA

BELOW-THE-HOOK LIFTING DEVICE
Engineering Note Cover Page

Lifting Device Numbers:

FNAL Site No/ _____ Div. Specific No. 176 Asset No. _____

If applicable — If applicable — If applicable

ASME B30.20 Group: (check one)
- [X] Group I Structural and Mechanical Lifting Devices
- [ ] Group II Vacuum Lifting Devices
- [ ] Group III Magnets, Close Proximity Operated
- [ ] Group IV Magnets, Remote Operated

Device Name or Description: Load Rotor for Lifting DECam Imager with its Handling Adapter

Device was (check all applicable)
- [X] Purchased from a Commercial Lifting Device Manufacturer. Mfg Name SPX Corporation
- [ ] Designed and Built at Fermilab
- [ ] Designed by Fermilab and Built by a Vendor. Assy drawing number _____
- [ ] Provided by a User or other Laboratory
- [ ] Other: Describe _____

Engineering Note Prepared by Edward Chi Date 07/ 23/ 2010

Engineering Note Reviewed by Dave Pushka Date 8/2/2010

Lifting Device Data:

Capacity 10,000 lbs

Fixture Weight 120 lbs

Service: [X] normal [ ] heavy [ ] severe
(refer to B30.20 for definitions)

Duty Cycle _____ 8, 16 or 24 hour rating (applicable to groups III, and IV)

Inspections Frequency Each time before lifting the Imager with its Handling Adapter

Rated Load Test by FNAL (if applicable) Date _____ Load _____

[ ] Check if Load Test was by Vendor and attach the certificate

Satisfactory Load Test Witnessed by: _____

Signature (of Load Test Witness) _____

Notes or Special Information: (See the attached documents constitute as part of the note):

- Copy of the Manufacturer's Certificate of Test (See page 5).
- Copies of the Operator's Manual (Operating Instructions, Parts List, Maintenance and Safety Precautions) (See page 6 to page 8).

Fermilab

Particle Physics Division
Mechanical Department Engineering Note

Number: MD-ENG- 261 Date: July 23, 2010

Project Internal Reference:

Project: DECam

Title: Load-Rotor for Lifting the Imager with its Handling Adapter

Author(s): Edward Chi

Reviewer(s): Dave Pushka 8/2/10

Key Words: Lifting, Fixture, Load- Rotor, Moving, Imager, DECam,

Abstract Summary:

The 10,000 lbs capacity Load-Rotor (SPX OTC 1822) is specially designed for lifting and moving the DECam Imager with its handling Adapter. The total mass weight of the Imager with its handling adapter is about 1,600 lbs. The application of the Load-Rotor enables the Imager to be moved to the designated location. The enclosed manufacturer's certificate of load test, operating instructions, maintenance and safety precautions makes as part of the engineering note per section 5022 of Fermilab ES&H manual.

Applicable Codes:

"Below-The-Hook Lifting Devices", 5022, Rev 03, 2008, ES&H Manual, FermiLab.
Section 3.b, page 3, 5022, Rev 03, 2008, ES&H Manual, FermiLab.

The Applicaion and Configeration of the 10,000 lbs Load - Rotor to lift the Imager with its Handling Adapter (IHA)

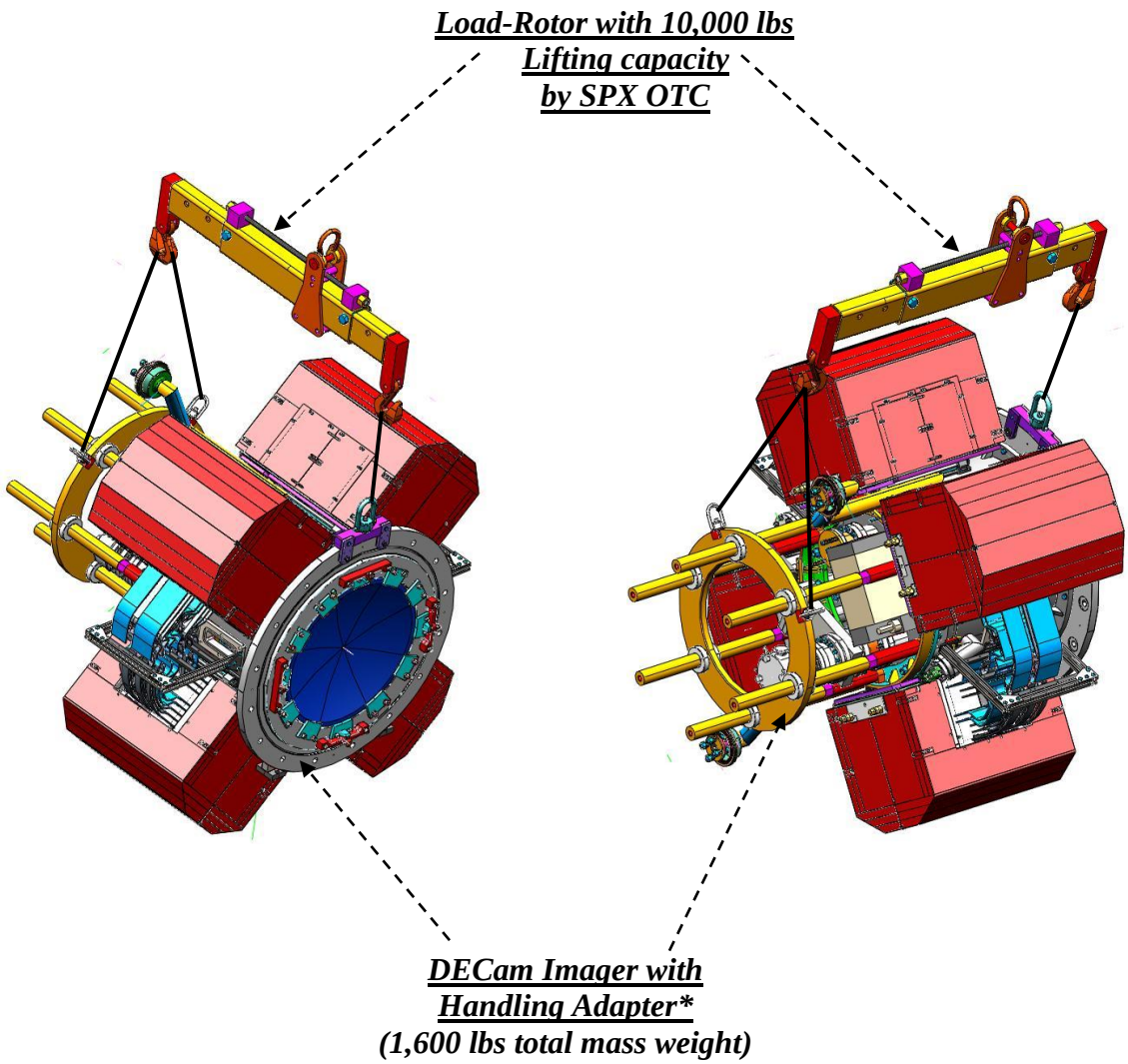

Figure 1, The application & configuration of the Load- Rotor with IHA

*: The engineering calculations and analysis for Imager Handling Adapter can be found from the section 4.2 and section 4.3 (page 8 to page 16) of the engineering note #262 – "The calculation and analysis for the Imager Moving and Handling Fixture", the detail of the note can be found from the link:
http://des-docdb.fnal.gov:8080/cgi-bin/ShowDocument?docid=4733.

The engineering note, #262, is used as a reference for this note, but should not be treated as part of this note.

Figure 2, The picture view of the SPX OTC 1822, Load-Rotor (10,000 lbs capacity).

SPX

Date: July 7, 2010

To: Whom it may concern

Subject: OTC 1822 10,000 lb Load-Rotor

The OTC 1822 10,000 lb Load-Rotor has been load tested to its rated load of 10,000 lbs and also proof load tested to 15,000 lbs (1.5 times rated load) with no structural failure. The alloy lifting chain assemblies that are used with the unit have a working load rating of 6000 lbs (each) and are proof tested at 14,600 lb. (each).

Signed: _____

Title: Director, Mechanical Engineering

Date: 7/7/2010

Sincerely,

SPX SERVICE SOLUTIONS
655 EISENHOWER DRIVE
P.O. BOX 995
OWATONNA, MN 55060-0995
UNITED STATES OF AMERICA

TEL 507 455 7000
FAX 507 455 7072

SPX OTC
SPX Corporation
655 Eisenhower Drive
Owatonna, MN 55060-0995 USA
Phone: (507) 455-7000
Tech. Serv.: (800) 533-6127
Fax: (800) 955-8329
Order Entry: (800) 533-6127
Fax: (800) 283-8665
International Sales: (507) 455-7223
Fax: (507) 455-7063

Form No. 524675

Parts List & Operating Instructions for: **1822**

Load-Rotor®

Max. Capacity: 10,000 lbs. / 4,540 kg

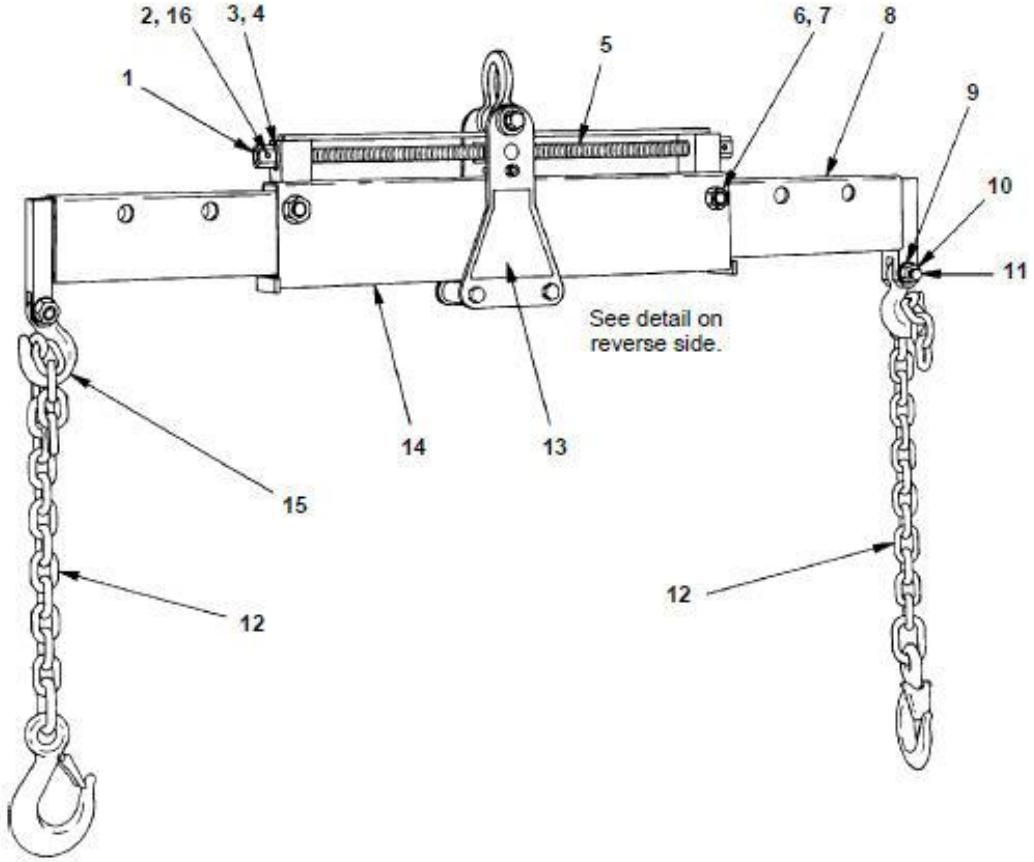

Item No.	Part No.	No. Req'd	Description
1	206675	2	Nut
2	10585	2	Roll Pin
3	206746	2	Thrust Bearing
4	16209	4	Thrust Washer
5	303449	1	Screw
6	19340	2	Hex Hd. Cap Screw *(3/4-10 x 4" Lg.)*
7	10216	2	Hex Nut *(3/4-10)*
8	52013	2	Inner Tube *(includes items 9, 10, 11, & 15)*
9	13324	4	Washer *(for 5/8" bolt)*
10	10213	2	Hex Nut *(5/8-18)*

Item No.	Part No.	No. Req'd	Description
11	22045	2	Hex Hd. Cap Screw *(5/8-18 x 2-1/2" Lg.)*
12	302249	2	Chain & Safety Hook
13	303471	1	Warning Decal
14	61039-WH2	1	Main Tube
15	16051	2	Eye Grab Hook
16	10481	2	Roll Pin
	Parts Included but Not Shown		
	304525	2	Capacity Decal

Sheet No. 1 of 2

Translations added.

Issue Date: Rev. B, 5-19-04

© 2004 SPX Corporation

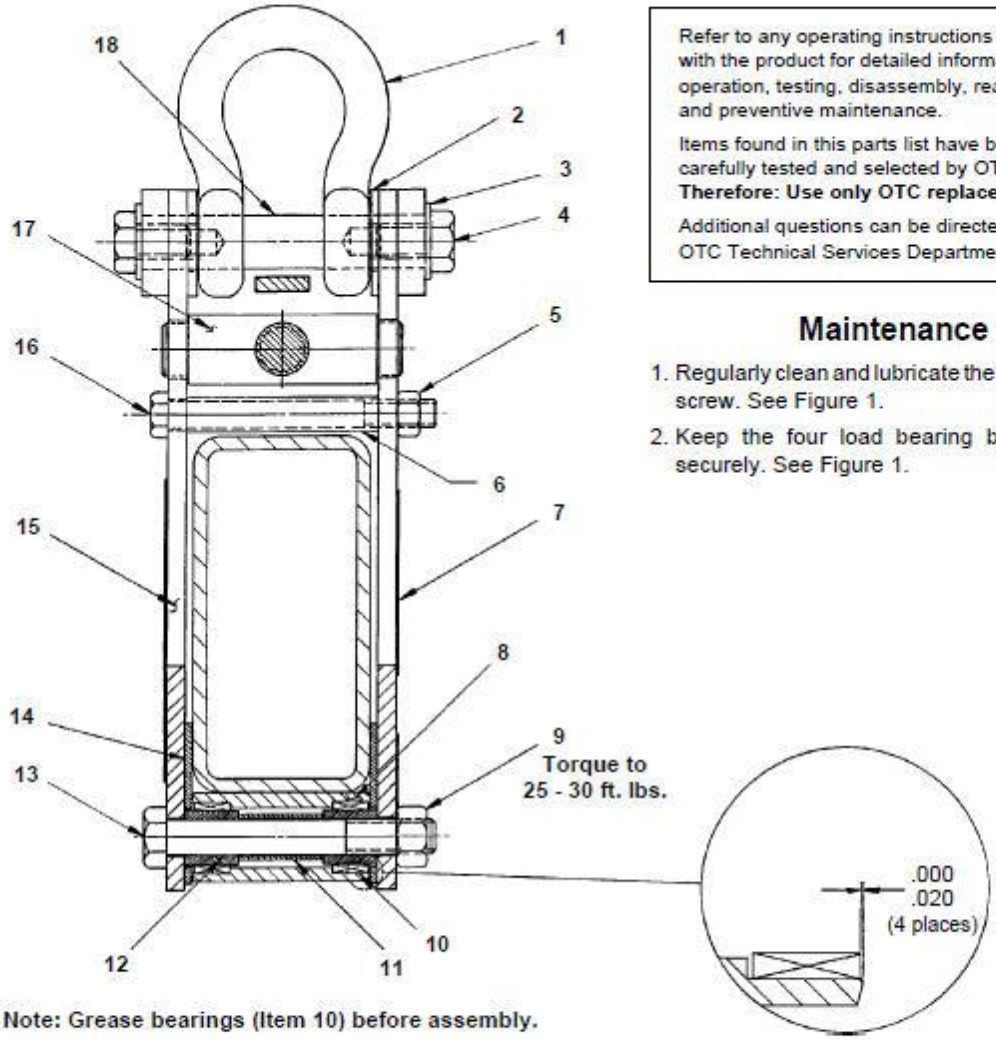

Note: Grease bearings (Item 10) before assembly.

Refer to any operating instructions included with the product for detailed information about operation, testing, disassembly, reassembly, and preventive maintenance.

Items found in this parts list have been carefully tested and selected by OTC. **Therefore: Use only OTC replacement parts!**

Additional questions can be directed to the OTC Technical Services Department.

Maintenance

1. Regularly clean and lubricate the tilt adjustment screw. See Figure 1.
2. Keep the four load bearing bolts fastened securely. See Figure 1.

Item No.	Part No.	No. Req'd	Description
1	208112	1	Anchor Shackle
2	208149	2	Spacer *(for 3/4" bolt)*
3	12004	2	Washer *(for 1/2" bolt)*
4	10075	2	Hex Hd. Cap Screw *(1/2-13 x 3/4" Lg.)*
5	207255	1	Hex Nut *(1/2-13)*
6	208110	1	Spacer
7	524674	1	Trade Name Decal
8	303452	2	Roller
9	12726	2	Locknut *(5/8-18; torque to 25-30 ft. lbs.)*

Item No.	Part No.	No. Req'd	Description
10	208087	4	Needle Bearing
11	208111	2	Spacer
12	208088	4	Inner Bearing Race
13	10465	2	Hex Hd. Cap Screw *(5/8-18 x 4-1/2" Lg.)*
14	303451	2	Wear Pad
15	52015	2	Side Plate
16	10094	1	Hex Hd. Cap Screw *(1/2-13x 4-1/2" Lg.)*
17	44937	1	Screw Block
18	303450	1	Pin

Safety Precautions

Caution: To prevent personal injury,

- **Wear eye protection that meets the requirements of ANSI Z87.1 and OSHA.**
- **Read, understand, and follow all instructions and safety precautions included with the Load Rotor®. If the operator cannot read English, operating instructions and safety precautions must be read and discussed in the operator's native language.**

– **Si el operador no puede leer inglés, las instrucciones de operación y las precauciones de seguridad deberán leerse y comentarse en el idioma nativo del operador.**

– **Si l'utilisateur ne peut lire l'anglais, les instructions et les consignes de sécurité doivent lui être expliquées dans sa langue maternelle.**

- **Secure all adjusting bolts before lifting a load.**
- **Attach BOTH lift arms to the load being lifted; do NOT use a single arm setup.**
- **Do not attempt to lift a load that exceeds the maximum capacity of 10,000 lbs. / 4,540 kg. Overloaded equipment can fail and cause personal injury. To ensure the load bearing chains are not stressed beyond their capacities, do not adjust the load rotor to an angle greater than 30° (see Figure 2), and do not spread the load bearing chains more than a total of 90° for both chains (see Figure 3).**
- **The load rotor is not designed for overhead lifting applications. Stay out from underneath a load being lifted or suspended.**

Operating Instructions

The Load Rotor is designed to handle and position large, bulky components. The horizontal tilt can be adjusted to compensate for off-center loads, or adjusted to a certain angle for a component being positioned.

1. Hook the load rotor to a crane or hoist.
2. Attach the two load bearing chains to the component. Adjust the extension arms in or out to keep the chain angle at a minimum.
3. Verify the bolts holding the extension arms are securely fastened. See Figure 1.

Caution: To maintain stability and ensure the load bearing chains are not stressed beyond their capacities,

- **Do not adjust the load rotor to an angle greater than 30°. See Figure 2.**
- **Do not spread the load bearing chains more than a total of 90° for both chains. See Figure 3.**

4. Lift the component enough to locate the center of balance. Level or adjust the angle of the load rotor by using a wrench to turn either end of the threaded adjustment screw.

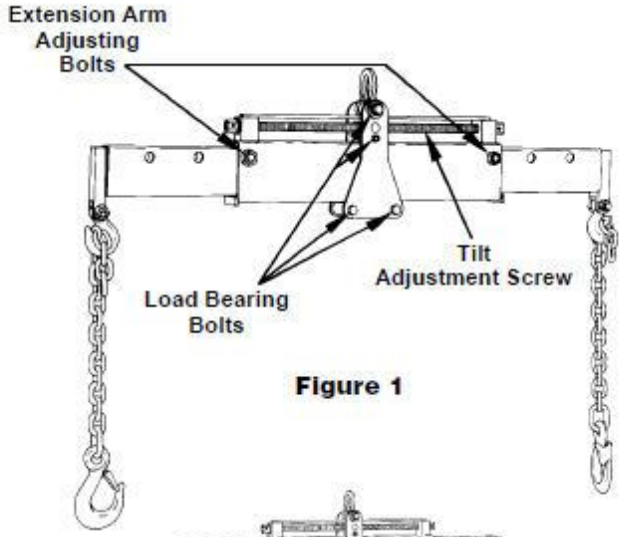

Figure 1

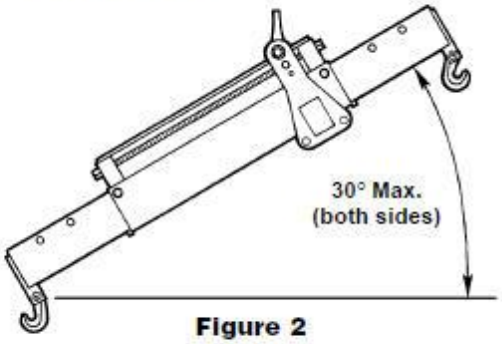

Figure 2

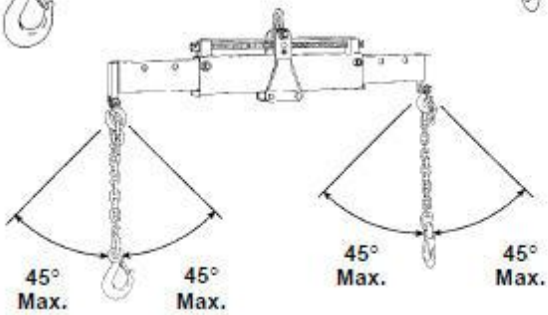

Figure 3

Sheet No.	2 of 2
Issue Date:	Rev. B, 5-19-04

© 2004 SPX Corporation

References:

Fermilab ES&H Manual, 5022, Rev.03/2008 "Below-The Hook Lifting Devices".
http://esh-docdb.fnal.gov/cgi-bin/RetrieveFile?docid=357&version=4&filename=5022.pdf

The fixture design principle and engineering layout slides:
http://des-docdb.fnal.gov:8080/cgi-bin/ShowDocument?docid=4624.

The detail drawings of the DECam Imager Moving and Handling Fixture:
http://des-docdb.fnal.gov:8080/cgi-bin/ShowDocument?docid=4683

The Parts List & Operating Instructions for 10,000 lbs capacity Load-Rotor:
http://cache01.voyageurweb.com/otctools.com/newcatalog/products/524675_1.pdf

The company information of the OTC (The manufacture of the Load-Rotor)
http://www.otctools.com/about.php