Fermilab

Particle Physics Division
Mechanical Department Engineering Note

Number: MD-ENG- 262 Date: July 26, 2010

Project Internal Reference:

Project: DECam

Title: The Calculations and Analysis for the Imager Moving and Handling Fixture.

Author(s): Edward Chi

Reviewer(s): Dave Poshka 30 July 2010

Key Words: Imager, Moving, Handling, Fixture, Rod, Rotation, Buckling, Allowable Stress, Computed Stress, Reaction, Tighten Torque.

Abstract Summary:

The calculations for DECam Imager Moving and Handling Fixture is approached & analyzed by presenting several loading cases which are based on the different applications and configurations. The calculated computed results under the defined boundary condition are well below the respective allowable data which are calculated from the respective applicable codes.

Applicable Codes:

"Allowable Stress Design", AISC, 9th edition
"Aluminum Design Manual", 6th edition, by the Aluminum Association.
"Fastener Standards" 6th edition, by Industrial Fasteners Institute", 1988
"Steel Structures" by C. Salmon & J. Johnson, 3rd edition
"Below the Hook Lifting Devices" ASME B30.20

The Calculations and Analysis for the DECam Imager Moving and Handling Fixture

1. ***Overall Brief Introduction***:

   The Imager moving and Handling fixture is a mechanical device which retrofits between the existing carriage support frame and the DECam Imager as shown from figure 1 of page 2, such fixture device will support the Imager during the

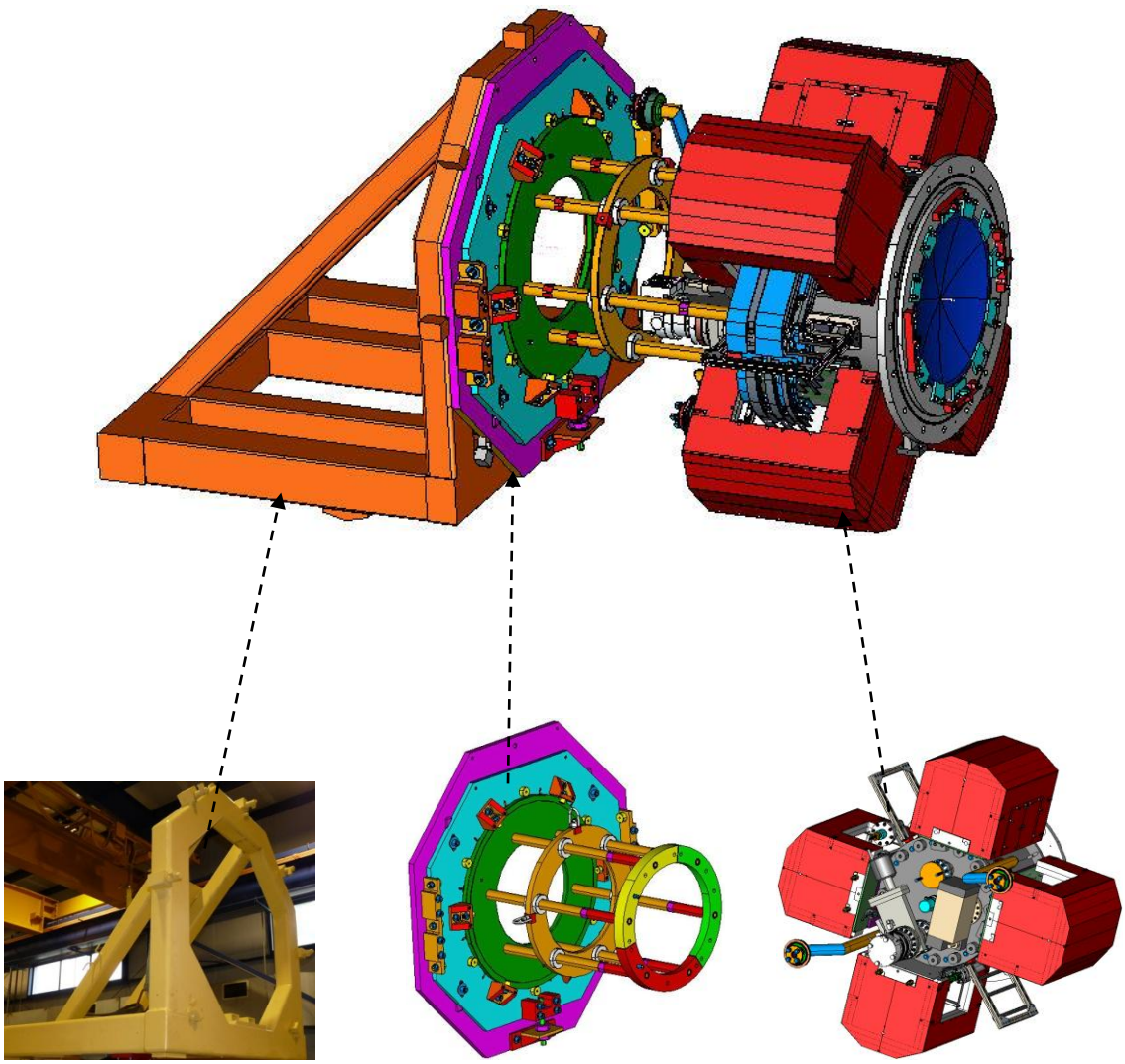

Carriage Suppot Frame (1)

Imager Moving & Handling Fixture (2)

DECam Imager ~(1,300 lbs) (3)

Figure 1, The configuration of the Imager Moving & Handling Fixture and its components

move and assembly process, and will enable the Imager for certain amount of angular rotation and linear alignment. Also, partial components of the Fixture (reinforcing ring, 6 studs and the connecting adapter) will act as handling adapter for moving the Imager to the designated location. There are slides to introduce step by step of the Imagine Moving and Handling Design through the link:

http://des-docdb.fnal.gov:8080/cgi-bin/ShowDocument?docid=4624.

2. ***The major calculation and analysis objects and their configurations:***

When the IMH Fixture (Imager Moving and Handling Fixture) together with the Carriage Frame supports the Imager, we can simplify it as: The Imager with Handling Adapter is supported by the carriage frame with three fixture base plates as showing from figure 2. The mechanical behavior of the Imager with its handling adapter needs to discuss under

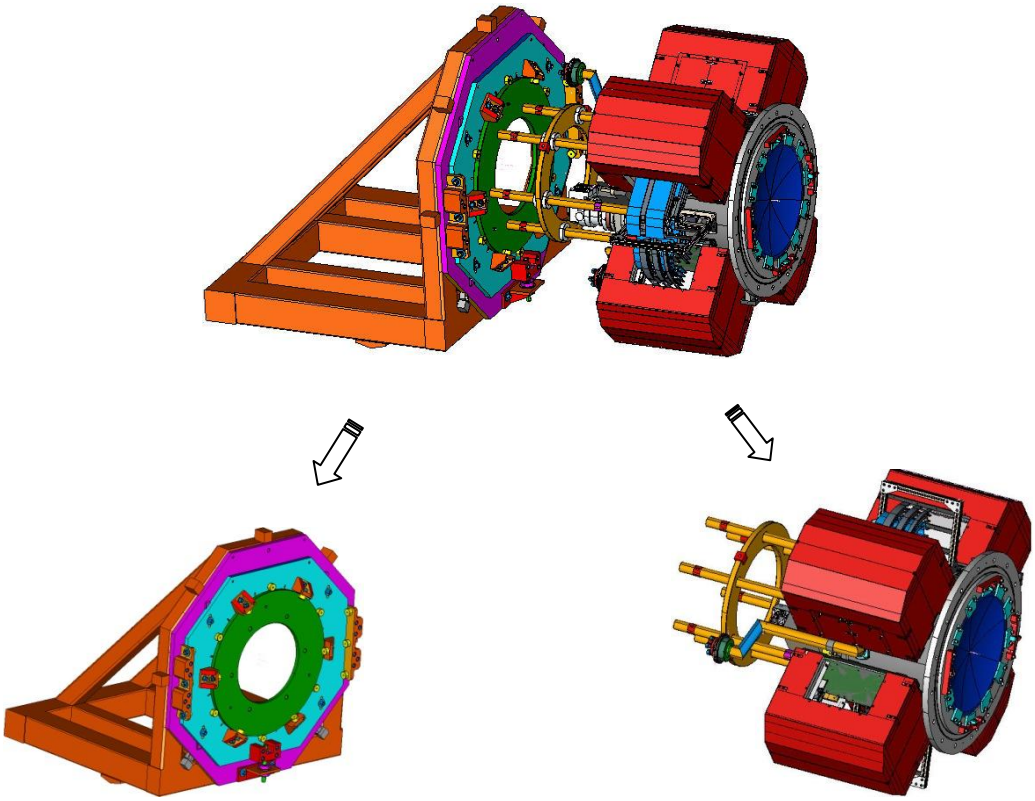

Carriage frame with base plates (3) of the Fixture

(I)

DECam Imager with Handling Adapter
(~1,600 lbs)

(II)

Figure 2, The overall view of the Imager Moving & Handling Fixture with its application.

two major conditions:

1. The structural calculations when the Imager with Handling Adapter supported by the Carriage frame with three base plates.
2. The structural calculation when the Imager with Handling Adapter lifted by the Load-Rotor (lifting fixture) as showing from figure 3 of page 4.

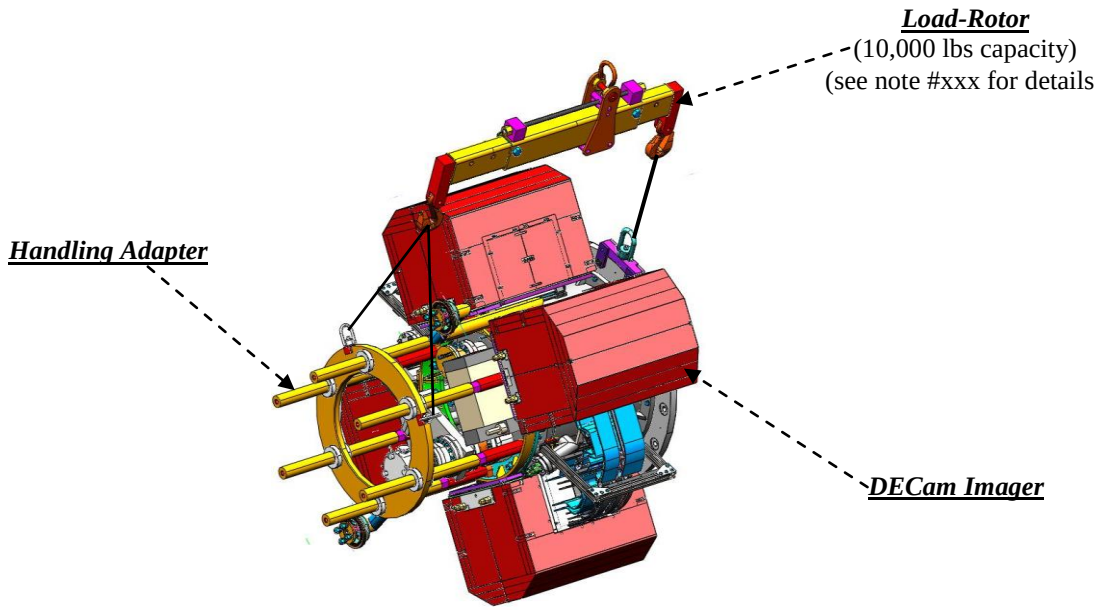

Figure 3, The Imager with the Handling Adapter lifted by the lifting fixture-Load Rotor.

3. ***Design Criteria and Assumptions***:

The force distribution, C.G location and some related dimension of the Imager and its handling adapter connecting with the Carriage Frame through three base plates of the fixture can be found in figure 4 of page 5.

We assume that the six (6) studs (1.75" dia. x 29.125" lg., 1045 steel, see drawing MC-480395) connect with Imager structural rigidly (a more detail calculations will present in a later section).

Per drawing of MD-480423 (from the link: http://des-docdb.fnal.gov:8080/cgi-bin/ShowDocument?docid=4683), it is found out that the studs are connected with the base plate through six (6) ¾-10, grade 8 steel bolts.

Per figure 4 of page 5, it is found out that:

L_{cg} = 36.2122" , the distance between the downstream end of the studs to the center of

gravity of the Imager with the handling adapter.

L_{cg} = ——— = ——————— = ————————————————————

= 36.2122 in

Where: w_1 = 1,300 lbs, the approx. wt of the Imager

z_1 = 50.6812” – (10.30” + 0.55”) = 39.8312”

(see link: http://des-docdb.fnal.gov:8080/cgi-bin/ShowDocument?docid=3204)

w_2 = 28 lbs (the weight of the connecting ring, see MD- 480408)

z_2 = 30.5625”

w_3 = 210 lbs (the total weight of the studs, reinforcing ring and other accessories, see MC-480395, MC-480396 & MD-480423)

z_3 = 14.5625” (assume the sub - C.G locates in the middle of the stud)

L = 50.6812” is the distance between the downstream end of the studs to the upstream lifting hook of the Imager with the handling adapter.

L_{lif} = 36.12” is the distance between the downstream lifting hook to the upstream lifting hook of the Imager with its handling adapter.

W_t = (1,300 + 28 + 210) = 1,538 lbs 1,600 lbs

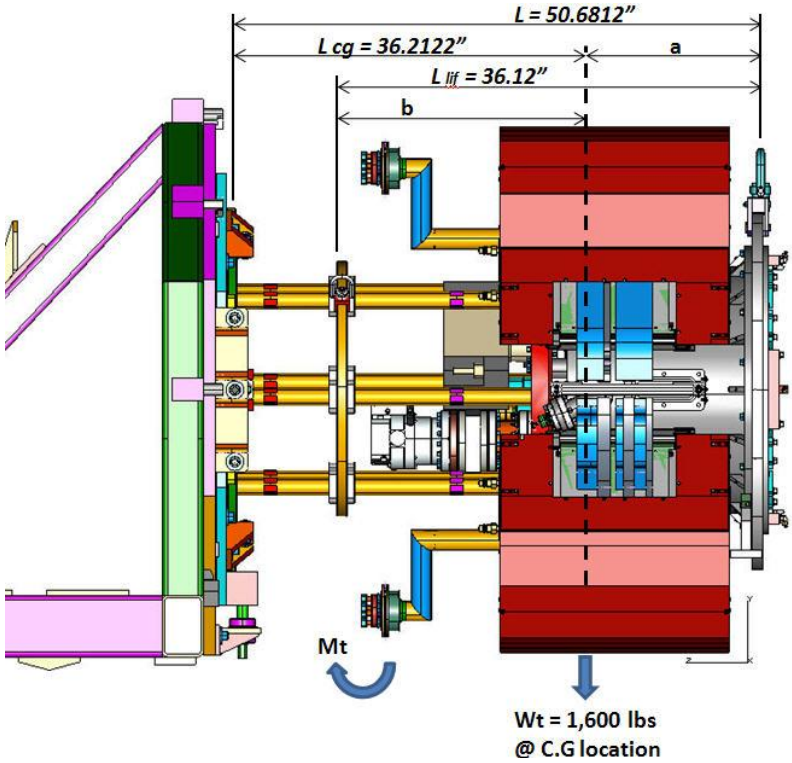

Figure 4, The location of the C.G and the other dimensions of the Imager & Fixture.

4. <u>Compute the applying moment (resistant moment), forces and stresses</u>.

4.1, The structural analysis of the six (6) support studs

Per the information from section 3, we can find the value of the moment M_t at the end of the studs subject to the mass weight W_t:

$M_t = W_t * L_{cg}$ = 1,600 lbs x 36.2122 in = 57,940 lbs-in

Figure 5 of page 6 is the cut view of the studs when they connect with the rotating base plate (see drawing MC-480404), as we know from figure, six studs will support the primary shear force 1,600 lbs, also will take the compressive or tensional force which will produce the resistant moment (M_r) to balance the applying moment M_t.

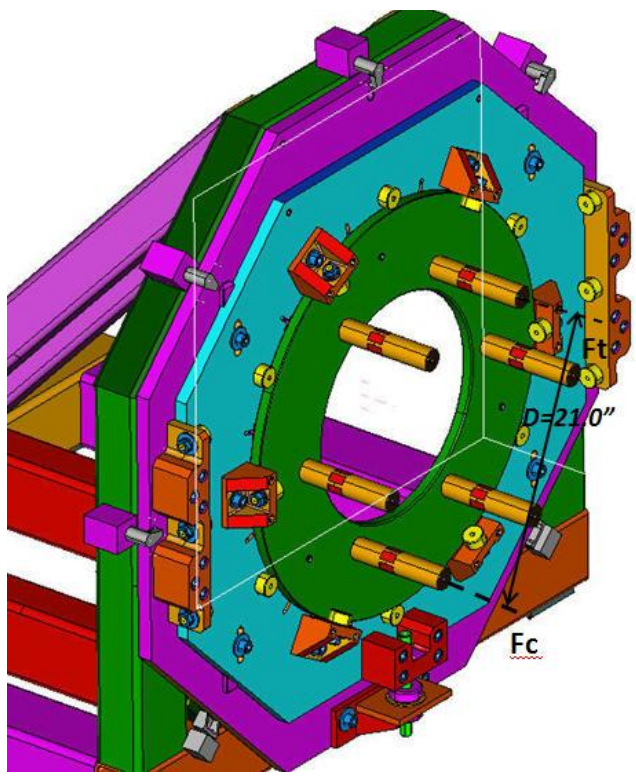

Figure 5, <u>The cut view of the studs with support frame and three base plates</u>

As for the conservative and simplify approach, let's assuming that 2 studs in vertically 180 degree apart will take whole secondary force (compressive or tensional) to generate the resistant moment $M_r = M_t$.

So:

$P_t * D = M_t$

$P_t = M_t / D$

$= 57{,}940$ lbs-in $\div$ 21.0 in
$= 2{,}759$ lbs $= P_c$

$p_v = Wt/6 = 1{,}600$ lbs $\div 6 = 267$ lbs
(The primary computed shear force to each stud or connecting bolt)

For stud (1045. HR steel, $F_y = 45.0$ ksi, $F_t = 27.0$ ksi, $F_v = 18.0$ ksi, assume d = 1.625")
$f_v = p_v / A_{stud} = 267$ lbs $\div$ 2.0739in^2 = 129 psi $< F_v =$ 18 ksi
$f_t = P_t \div A_{stud} = 2{,}759$ lbs $\div$ 2.0739 in^2 = 1.33ksi $< F_t =$ 27 ksi

For ¾-10, UNC socket head screw, $F_u = 160$ ksi, $F_t = 0.33F_u = 52.8$ ksi, $F_v = 0.17F_u$ =27.2 ksi, per pg4-3 & pg4-5 of ASD, 9th edition.

$P_{vscrew} = A_{screw} \times F_v =$ 0.4418 in^2 x 27.2 ksi = 12,016 lbs $> P_v = 267$ lbs.
$P_{tscrew} = A_{screw} \times F_t =$ 0.4418 in^2 x 52.8 ksi = 23,327lbs $> P_t = 2{,}759$ lbs.

From page 6, it is also found that the compressive force along the stud $F_c = 2{,}759$ lbs.

where $L_{stud} = 29.125$" (per MC-480395)
$r_{gyration} = 0.4063$ in (using d = 1.625")
$F_y = 45$ ksi (for 1045 H.R. steel)
$E = 29 \times 10^3$ ksi, modulus of elasticity
$K = 1.2$

Per section E2, and table C-C2.1 of ASD 9th edition, then:

$C_c = (2\pi^2 E / F_y)^{1/2}$
$= 112.787$
$KL_{stud} / r = 1.2 \times 29.125$ in / 0.4063 in
$= 86.02 < C_c = 112.787$

The allowable stress for the axial load is:
$F_a = \{[1 - (KL_{stud}/r_{gy})^2/2C_c^2]\, F_y\} \div [\,(5/3) + 3(KL_{stud}/r_{gy})/8C_c - (KL_{stud}/r_{gy})^3/8C_c^3]$
$= [(1 - 0.2908) \times 45 \text{ ksi}] \div (1.667 + 0.286 - 0.0555)$
$= \underline{16.819 \text{ ksi}}$

The compute compressive stress of the stud f_c:
$F_c = F_c \div A_{stud} = 2{,}759$ lbs $\div$ 2.074 in^2 = 1.33ksi $< F_a =$ 16.819 ksi

Find out the critical force P_{cr} to cause the stud to buckling:
$P_{cr} = (\pi^2 E)\, A_g / (KL_{stud}/r)^2$
(See section 6.3, Steel Structures Design & Behavior, 3rd edition)
$= (\pi^2 \times 29 \times 1000 \text{ ksi}) \times 2.074 \text{ in}^2 / (1.20 \times 29.125 \text{ in} / 0.4063 \text{ in})^2$
$= 80.22$ kip $> P_t = P_c = 2.759$ kip

So there is no buckling for the studs under the current IMH Fixture load condition.

The designed studs and the connecting bolts are satisfactory subject to the defined application.

4.2, ***Analysis and calculations for the aluminum connecting ring***

The aluminum connecting ring (see drawing MD-480408) is the device to connect the Imager back flange with the fixture support plates through the studs and the other accessories. The aluminum ring composed by three (3) segments for easier install and handling. In section 4.1, we conservatively assumed that there are 2 studs, vertically 180 degree apart each other, these two studs have to take the resistant moment M_r to balance the applying moment M_t. With such conservative assumption, it is found out that the maximum axial force along the stud is P_c=P_t = 2,759 lbs.

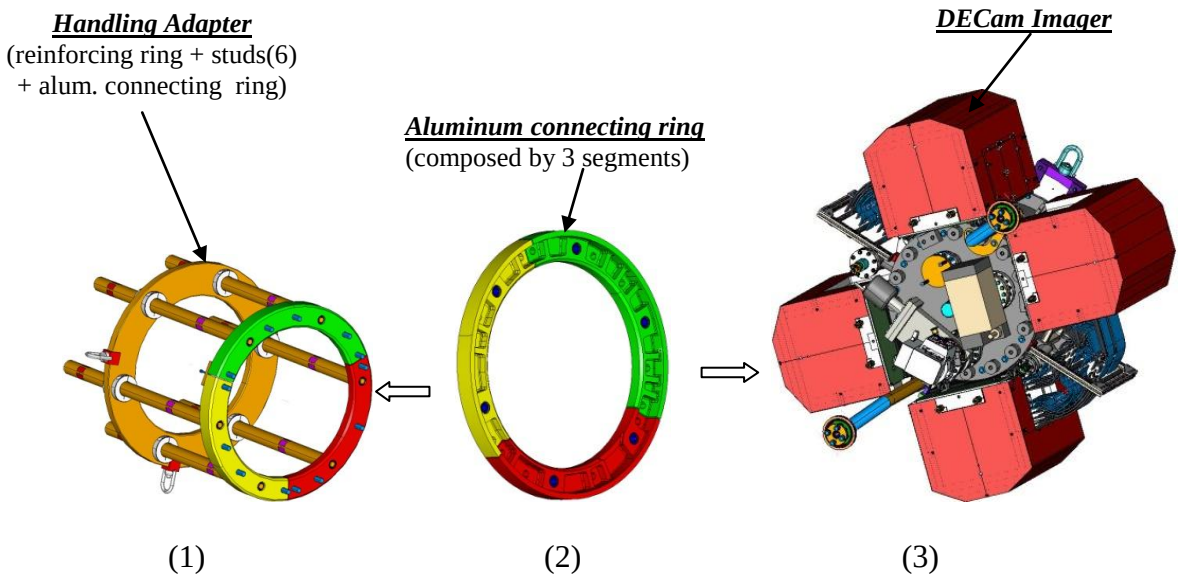

Figure 6, The application of the Handling Adapter and the aluminum connecting ring

It is found out that there are six (6) location where the studs connect for the aluminum, and each aluminum segment has two stud connecting location (see figure 6(1) and figure 6(2)).

4.2.1, **Figure 7 to figure 11 are the finite element analysis (FEA) results base on the model with the following boundary condition:**

- Material: aluminum 6061-T6, E = 10^7 psi
  (See table 3.3-1, part I-A, ALD, The Aluminum Association, Inc.)
- Segment geometry: 135 degree, the largest one of three segments (see MD-480408).
- Assume the whole axial force P_c =P_t = 2,760 lbs only applying one location (where the stud locates) in normal direction of the major plane of the ring.

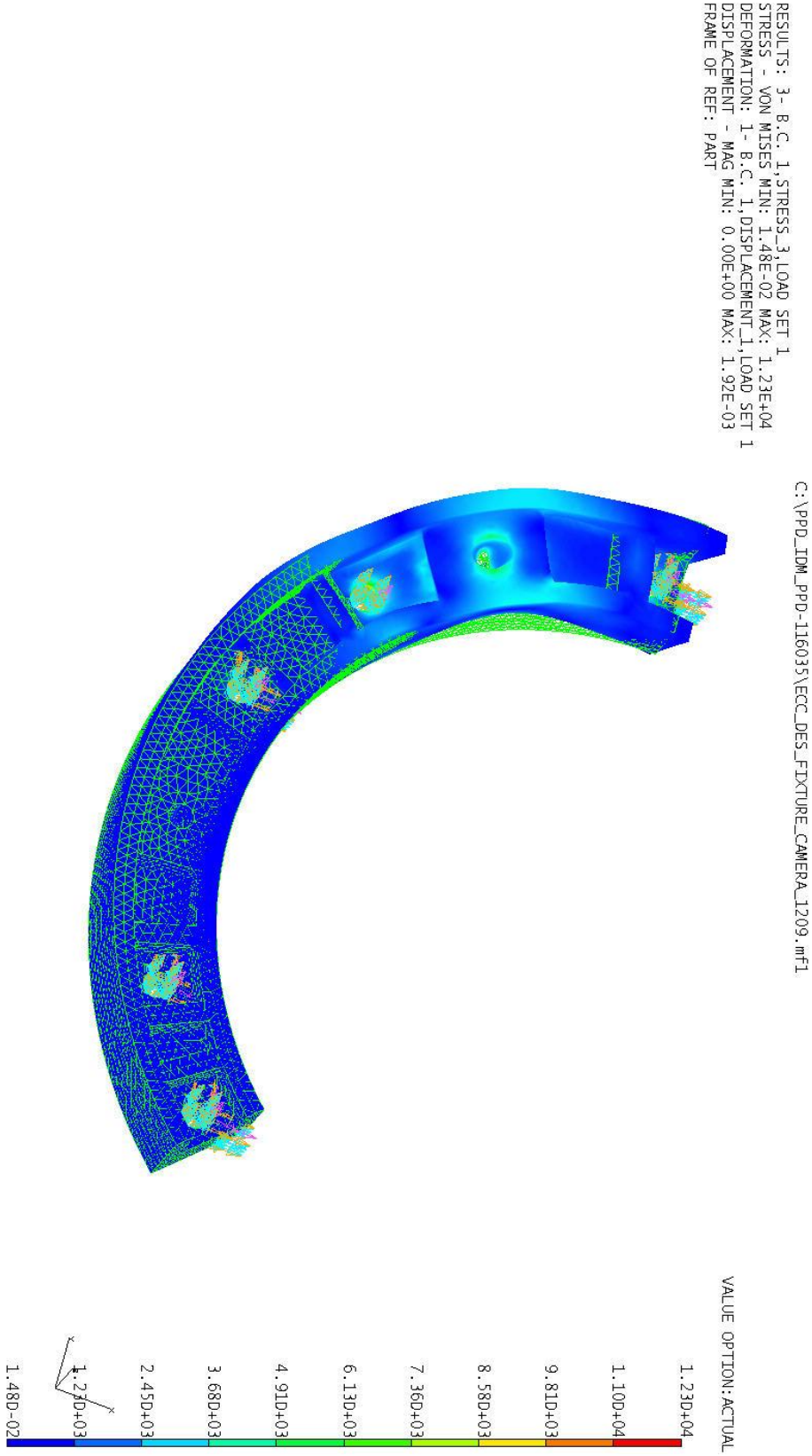

Figure 7, The stress chart of the aluminum segment under max. axial force @ one location

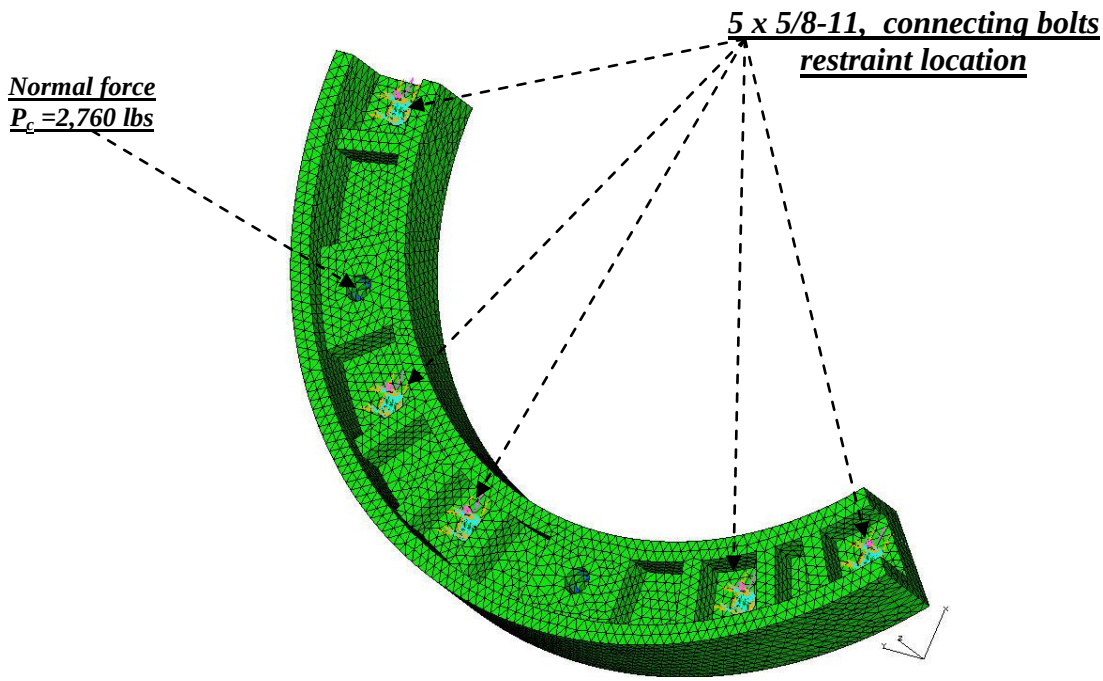

Figure 8, The boundary condition of the FEA model of the aluminum connecting segment

Page 1

I-DEAS 12 NX Series m4: Simulation 21-Jul-10 15:59:54
C:\PPD_IDM_PPD-116035\ECC_DES_FIXTURE_CAMERA_1209.mf1

Group ID : None
Result Set : 3 - B.C. 1,STRESS_3,LOAD SET 1
Report Type : Contour Units : IN
Result Type : STRESS
Frame of Reference: Part Data Component: Y-Component

	Stress-XX	Stress-XY	Stress-YY	Stress-XZ	Stress-YZ	Stress-ZZ
	782	784	784	782	784	784
Maximum	1.415E+04	4.384E+03	1.343E+04	4.293E+03	4.222E+03	8.231E+03
	1292	1291	1290	807	809	1290
Minimum	-1.169E+04	-3.460E+03	-1.168E+04	-4.644E+03	-2.038E+03	-6.605E+03
Average	3.893E+01	1.213E+01	-2.914E+00	-4.890E+00	4.222E+00	1.236E+01

Figure 9, The stress value of the alum. segment under max. axial force @ one location

Page 1

I-DEAS 12 NX Series m4: Simulation 21-Jul-10 16:02:03
C:\PPD_IDM_PPD-116035\ECC_DES_FIXTURE_CAMERA_1209.mf1

Group ID : None
Result Set : 1 - B.C. 1,DISPLACEMENT_1,LOAD SET 1
Report Type : Contour Units : IN
Result Type : DISPLACEMENT
Frame of Reference: Part Data Component: Y-Component

	Displa-X	Displa-Y	Displa-Z	Displa-RX	Displa-RY	Displa-RZ
	2315	379	18309	1	1	1
Maximum	6.876E-04	2.142E-04	1.895E-03	0.000E+00	0.000E+00	0.000E+00
	879	2277	2616	1	1	1
Minimum	-3.497E-04	-5.020E-04	-2.320E-04	0.000E+00	0.000E+00	0.000E+00
Average	1.327E-05	-4.432E-05	3.051E-04	0.000E+00	0.000E+00	0.000E+00

Figure 10, The displacement of the alum. segment under max. axial force @ one location

Page 1

I-DEAS 12 NX Series m4: Simulation 21-Jul-10 16:00:52
C:\PPD_IDM_PPD-116035\ECC_DES_FIXTURE_CAMERA_1209.mf1

Group ID : None
Result Set : 2 - B.C. 1,REACTION FORCE_2,LOAD SET 1
Report Type : Contour Units : IN
Result Type : REACTION FORCE
Frame of Reference: Part Data Component: Y-Component

	Reacti-X	Reacti-Y	Reacti-Z	Reacti-RX	Reacti-RY	Reacti-RZ
Total	1.211E-04	-1.481E-04	-2.760E+03	0.000E+00	0.000E+00	0.000E+00
	1292	11597	11480	13	13	13
Maximum	8.176E+01	8.442E+01	1.058E+01	0.000E+00	0.000E+00	0.000E+00
	782	784	784	13	13	13
Minimum	-9.910E+01	-9.231E+01	-5.865E+01	0.000E+00	0.000E+00	0.000E+00
Average	1.495E-07	-1.829E-07	-3.408E+00	0.000E+00	0.000E+00	0.000E+00

Figure 11, The reaction of the alum. segment under max. axial force @ one location

The FEA results from the BC model as showing from figure 8 of page 10:

$f_{vonmises}$ = 12.3 ksi (see figure 7 of page 9)

f_{tmax} = 14.15 ksi < F_t =19 ksi (see figure 9 of page 10)
f_{cmax} = 11.69 ksi < F_c = 19 ksi (see figure 9 of page 10)
f_{vmax} = 4.384 ksi < F_v = 12 ksi (see figure 9 of page 10)
$\boldsymbol{\delta}_{max}$ = 0.0019" in the force applying direction (see figure 10 of page 11)
P_{rt} = 2,760 lbs. Total reaction force in the normal direction (z) of the segment major plane, where is the opposite direction of the applying force. (see figure 11 of page 11).

Where:
F_t, F_c and F_v are the allowable stresses for the aluminum segment (6061-T6 plate), per Table 2-21, part VII of "Aluminum Design Manual" by The Aluminum Association, Inc, 1994.
The copy of the table 2-21 can be found from page 17 to page 18.

All FEA computed stresses are less than the allowable stresses under the most conservative boundary condition, the design of the aluminum connecting ring is satisfactory subject to the application of the DECam Imager.

4.2.2, **Calculations and analysis for the fastening inserts of the aluminum segment/ring.**

Since the connecting ring/segment material is aluminum, it is applying the insert at the location where the stud connects. Drawing MC-480407 and the page 19 can get the detail specification of the insert.

Let us find the capacity of the insert to resistant the pull out force P_{pull} under the parent material (aluminum 6061-T6).

P_{pull} = Shear engagement area x the shear strength of the parent material
= A_{seng} x F_{su}
= 2.4901 in^2 x 27 ksi
= 67.23 kip > P_t = P_c = 2.759 kip

Where:
A_{seng} = 2.4901 in^2, the shear engagement area for external thread of 1.125 –12, UNF-2A, see page 17 for details.
F_{su} = 27 ksi, the shear strength of the aluminum, 6061-T6, see table 3.3-1, Part I-A-18, "Aluminum Design Manual" by The Aluminum Association, Imc. 1994.

The design of the aluminum ring with its inserts is satisfactory subject to the applying force under defined boundary condition.

4.3, ***Analysis and calculations for the Imager and the Handling Adapter under the Load-Rotor Lifting***

From the figure 3 of page 4, it is found out that the DECam Imager with its Handling Adapter is lifted by the lifting fixture: 10,000 lbs capacity Load-Rotor. The details of the Load-Rotor can find from the engineering note #261, however, it is still necessary to verify that the Handling Adapter is satisfactory subject to the apply forces under the defined boundary condition.

Per the configurations from figure 3 and figure 4, we can assume that the force distribution of the Imager with the handling adapter lifted by the Load-Rotor as: Simple beam with the concentrated load at any point (where the C.G locates).

From figure 4 of page 5, it is found that:

L_{lif} = 36.12", distance between the lifting hook of the Load –Rotor.
(Assuming the reinforcing lifting ring is @ the middle point of the studs in axial dir.)
a = 14.469"
b = 21.651"
W_t = 1,600 lbs.

4.3.1, *Find the shear force of the reinforcing lifting ring or studs*:

$$P_{v@ring\ or\ studs} = (W_t \times a) \div L_{lif}$$
$$= (1{,}600 \text{ lbs} \times 14.469 \text{ in}) \div 36.12 \text{ in}$$
$$= 641 \text{ lbs.}$$

From drawing MC-480396, it is found out the material for the ring is ASTM A 36 steel, (with F_u = 58 ksi, F_y = 36 ksi) and the bearing hole thickness with the studs is 1.00", so assuming conservatively that only one hole bears whole shear force of the ring:

$$P_{bearing} = A_{proj} \times F_v$$
$$= 1.0" \times 1.750" \times 12 \text{ ksi}$$
$$= 21 \text{ kip} > P_{v@ring\ or\ studs} = 0.641 \text{ kip}$$

Where
F_v is the allowable shear rupture, using the lesser of
F_{v1} = 0.30 Fu = 17.4 ksi
(per eq. J4-1, section J4 of AISC, 9th edition)
F_{v2} = F_y/3.0 = <u>12 ksi</u>
(per "Below the Hook Lifting Devices" ASME B30.20)

The computed shear stress of the stud f_{vs} under the lifting:

$$f_{vs} = P_{v@ring\ or\ studs} \div A_{stud}$$
$$= 641 \text{ lbs} \div 2.405 \text{ in}^2$$
$$= 267 \text{ psi} < F_{vstud} = 18 \text{ ksi (See page 7)}$$

where:

d_{stud} = 1.75”, the diameter of the stud @ ring area.

The design of both reinforcing lifting ring and the studs are satisfactory under the defined applying lifting force.

4.3.2, *Find the pull out force capacity of the thread hole for connecting the hoist ring*:

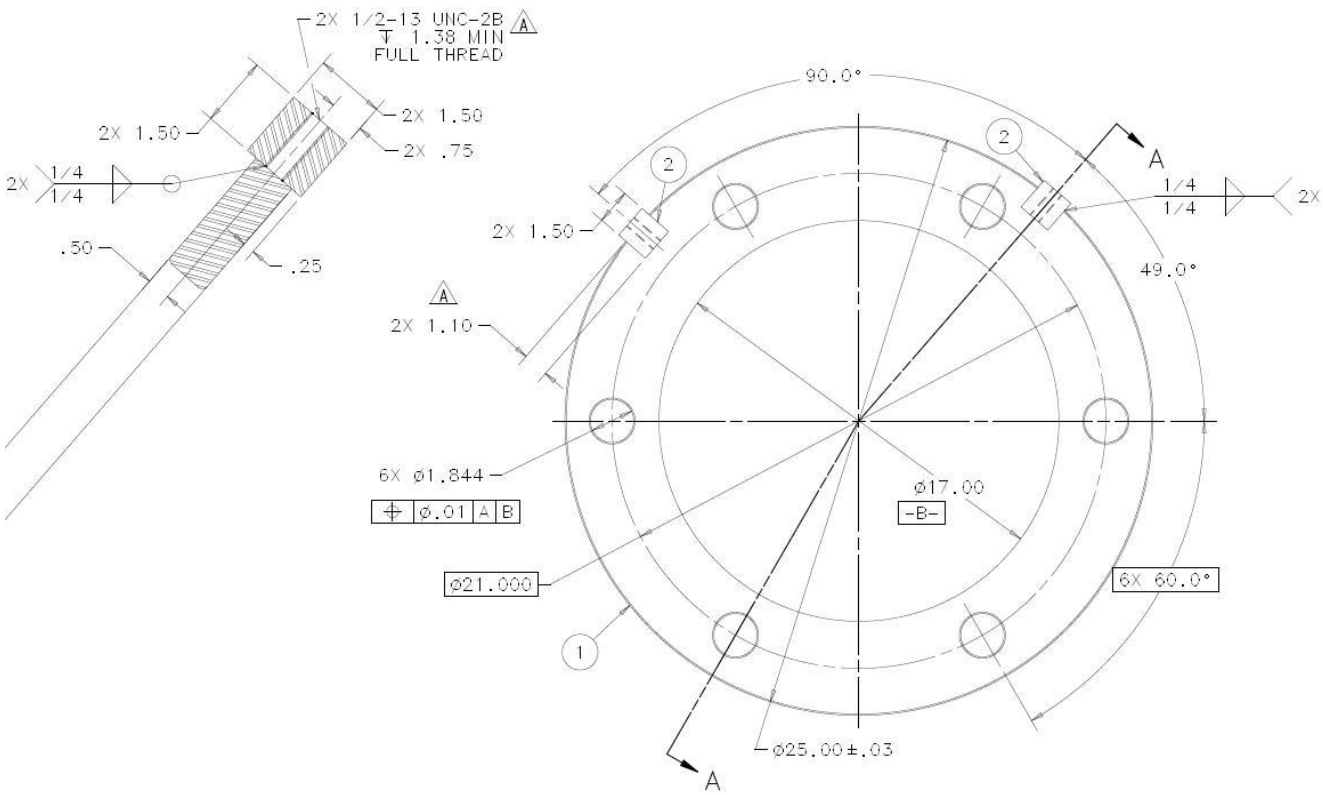

Figure 12, Partial view of the drawing MC-480396, reinforcing lifting ring

Figure 12 of page 14 is the partial view of the drawing MC-480396, which is the engineering drawing for the reinforcing lifting ring as shown from figure 6 (1) of page 8.

It is also necessary to check the thread pull out capacity to resist the force of lifting from the defined application.

Per figure 12 or drawing MC-480396, it is found out that:

For internal thread: ½-13, UNC-2B:

L_e = 1.00 in, length of the thread engagement
A_{seng} = 1.12 in^2, thread shear engagement area for internal thread ½ -13, UNC-2B (per pgA-8, "Fastener Standards", by IFI, 1988.
$F_{vthread}$ = 36 ksi/3.0 = 12 ksi, allowable shear stress of the internal thread material (per "Below the Hook Lifting Devices" ASME B30.20)

P_{pull} = Shear engagement area x the allowable shear strength of the material
= A_{seng} x $F_{vthread}$
= 1.12 in^2 x 12 ksi
= 13.44 kip > $P_{hoistring}$ = 2.5 kip > $P_{v@ring\ or\ studs}$ = 0.641 kip

Where:
$P_{hoistring}$ = 2.5 kip, the lifting capacity of the standard hoist ring of ½-13.

The designed thread hole (1/2 -13, UNC-2B) of the ring has far more pull out capacity than the applying load.

4.3.3, *<u>Find out the welding capacity of the lifting block of the reinforcing ring:</u>*

Treats the welds as a line and find its geometrical properties:

L_{w1} = 2 x 1.00" + 4 x 1.12" + 2 x 1.50" = 9.48 in
where L_{w1} is the length of the welds around the lifting block.

Assuming :

$P_{v@ring\ or\ studs}$ = 641 lbs (per section 4.3.1 of page 13) applies to one lifting hoist ring,

The axial force along the block thread hole will be:
P_{axial} = $P_{v@ring\ or\ studs}$ ÷ SIN [180° – (90° + 49°)]
= 977 lbs.

f_{v1} = P_{axial} ÷ L_{w1} = 977 lbs ÷ 9.48 in
= 103 lbs/in

There are no significant secondary forces from the bending and tensional moments, so we can assume that:

The resultant force per inch:
f_r ~ f_{v1} = 103 lbs/in

Compute the calculated weld fillet size C:

$C = f_r \div 0.707\ F_{vw} = 103\ \text{lbs-in}^{-1} \div 0.707\text{x}\ 21{,}000\ \text{lbs-in}^{-2}$

$= \underline{0.007\ \text{in}} < 0.25$ in (weld size from drawing MC-480396)

Where:

F_{vw} =21 ksi, the allowable stress on welds for the welding metal: E70
(See Table J2.5, Chapter J of AISC, 9th edition)

The designated welds should be satisfactory subject to the applying loads under the defined boundary condition.

5. **Conclusions**

Section 4.1 (page 6 and page 7) presented the calculations of the six studs under the very conservative boundary condition. The computed results for the studs and screws are far below the allowable force and stresses of the compressive column member.

Section 4.2 (page 8 to page 12) are the calculation details for the aluminum connecting ring, it is analyzed with the FEM under the simplify and conservative boundary condition; the pull out force also was calculated for the fastening inserts. All the computed calculated results are smaller than their respective allowable stresses and forces.

There are also have detail discussion for the reinforcing lifting ring and studs under the Load-Rotor lifting condition from page 13 to page 16, the calculated results are far below the allowable forces and stresses which derived from the respective applicable codes.

Based on the analyzed and calculated results, it is indicating that the design of the DECam Imager Moving and Handling Fixture is satisfactory per the applicable codes under the defined boundary condition.

6. **References:**

The detail drawings of the DECam Imager Moving and Handling Fixture:
http://des-docdb.fnal.gov:8080/cgi-bin/ShowDocument?docid=4683

The fixture design principle and engineering layout slides:
http://des-docdb.fnal.gov:8080/cgi-bin/ShowDocument?docid=4624.

The detail Cam Follower bearing information:
http://www.rbcbearings.com/camfollowers/index.htm

The detail information of the Alcoa Fastening System:
http://www.alcoa.com/fastening_systems/aerospace/en/product_category.asp?cat_id=679

Table 2-21
Allowable Stresses for BUILDING and Similar Type Structures

6061–T6, –T651, –T6510, –T6511

Extrusions up thru 1 in., Sheet & Plate, Pipe, Standard Structural Shapes, Drawn Tube, Rolled Rod and Bar, 6351–T5 Extrusions

WHITE BARS apply to nonwelded members and to welded members at locations farther than 1.0 in. from a weld.

SHADED BARS apply within 1.0 in. of a weld.

Equations that straddle the shaded and unshaded areas apply to both.

*For tubes with circumferential welds, equations of Sections 3.4.10, 3.4.12, and 3.4.16.1 apply for $R/t \geq 20$.

Type of Stress	Type of Member or Component	Spec. 3.4.	Allowable Stress
TENSION, axial, net section	Any tension member	1	19 / 11†
TENSION IN BEAMS, extreme fiber, net section	Rectangular tubes, structural shapes bent around strong axis	2	19 / 11†
	Round or oval tubes	3	24 / 13.5†
	Shapes bent about weak axis, bars, plates	4	28 / 16†
BEARING	On rivets and bolts	5	34 / 18†
	On flat surfaces and pins and on bolts in slotted holes	6	23 / 12†

Type of Stress	Type of Member or Component	Spec. 3.4.	Allowable Stress Slenderness ≤ S_1	Slenderness Limit S_1	Allowable Stress Slenderness Between S_1 and S_2	Slenderness Limit S_2	Allowable Stress Slenderness > S_2
COMPRESSION IN COLUMNS, axial, gross section	All columns	7	19 / 12†	$kL/r = 9.5$ / —	$20.2 - 0.126\,(kL/r)$ / 12†	$kL/r = 66$ / $kL/r = 65$‡	$51{,}000/(kL/r)^2$ / $51{,}000/(kL/r)^2$
COMPRESSION IN COMPONENTS OF COLUMNS gross section	Flat plates supported along one edge - columns buckling about a symmetry axis	8	19 / 12†	$b/t = 5.2$ / —	$23.1 - 0.79\,(b/t)$ / 12†	$b/t = 10$ / $b/t = 13$‡	$154/(b/t)$ / $154/(b/t)$
	Flat plates supported along one edge - columns not buckling about a symmetry axis	8.1	19 / 12†	$b/t = 5.2$ / —	$23.1 - 0.79\,(b/t)$ / 12†	$b/t = 12$ / $b/t = 13$‡	$1970/(b/t)^2$ / $1970/(b/t)^2$
	Flat plates with both edges supported	9	19 / 12†	$b/t = 16$ / —	$23.1 - 0.25\,(b/t)$ / 12†	$b/t = 33$ / $b/t = 41$‡	$490/(b/t)$ / $490/(b/t)$
	Flat plates with one edge supported and other edge with stiffener	9.1	See Section 3.4.9.1				
	Flat plates with both edges supported and with an intermediate stiffener	9.2	See Section 3.4.9.2				
	Curved plates supported on both edges, walls of round or oval tubes	10*	19 / 12†	$R/t = 16$ / $R/t = 9.0$	$22.2 - 0.80\sqrt{R/t}$ / $13.5 - 0.50\sqrt{R/t}$	$R/t = 141$ / $R/t = 290$	$\dfrac{3200}{(R/t)(1 + \sqrt{R/t}/35)^2}$

Type of Stress	Type of Member or Component	Spec. 3.4.	Allowable Stress Slenderness ≤ S_1	Slenderness Limit S_1	Allowable Stress Slenderness Between S_1 and S_2	Slenderness Limit S_2	Allowable Stress Slenderness ≥ S_2
COMPRESSION IN BEAMS, extreme fiber gross section	Single web beams bent about strong axis	11	21	$L_b/r_y = 23$	$23.9 - 0.124L_b/r_y$	$L_b/r_y = 79$	$\frac{87{,}000}{(L_b/r_y)^2}$
			12†	—	12†	$L_b/r_y = 85$‡	
	Round or oval tubes	12*	25	$R_b/t = 28$	$39.3 - 2.70\sqrt{R_b/t}$	$R_b/t = 81$	Same as Section 3.4.10
			14†	$R_b/t = 51$	$23.9 - 1.39\sqrt{R_b/t}$	$R_b/t = 137$	
	Solid rectangular and round section beams	13	28	$d/t\sqrt{L_b/d} = 13$	$40.5 - 0.93\,d/t\sqrt{L_b/d}$	$d/t\sqrt{L_b/d} = 29$	$\frac{11{,}400}{(d/t)^2\,(L_b/d)}$
			16†	$d/t\sqrt{L_b/d} = 26$	$40.5 - 0.93\,d/t\sqrt{L_b/d}$	$d/t\sqrt{L_b/d} = 29$	
	Rectangular tubes and box sections	14	21	$L_bS_c/.5\sqrt{I_yJ} = 146$	$23.9 - 0.24\sqrt{L_bS_c/.5\sqrt{I_yJ}}$	$L_bS_c/.5\sqrt{I_yJ} = 1700$	$\frac{24{,}000}{(L_bS_c/.5\sqrt{I_yJ})}$
			12†	—	12†	$L_bS_c/.5\sqrt{I_yJ} = 2000$‡	
COMPRESSION IN COMPONENTS OF BEAMS, (component under uniform compression), gross section	Flat plates supported on one edge	15	21	$b/t = 6.8$	$27.3 - 0.93\,b/t$	$b/t = 10$	$182/(b/t)$
			12†	—	12†	$b/t = 15$‡	$182/(b/t)$
	Flat plates with both edges supported	16	21	$b/t = 22$	$27.3 - 0.29\,b/t$	$b/t = 33$	$580/(b/t)$
			12†	—	12†	$b/t = 48$‡	$580/(b/t)$
	Curved plates supported on both edges	16.1*	25	$R_b/t = 1.6$	$26.2 - 0.94\sqrt{R_b/t}$	$R_b/t = 141$	$\frac{3800}{(R_b/t)(1 + \sqrt{R_b/t}/35)^2}$
			14†	$R_b/t = 2.5$	$14.7 - 0.44\sqrt{R_b/t}$	$R_b/t = 290$	
	Flat plates with one edge supported and the other edge with stiffener	16.2	See Section 3.4.16.2				
	Flat plates with both edges supported and with an intermediate stiffener	16.3	See Section 3.4.16.3				
COMPRESSION IN COMPONENTS OF BEAMS, (component under bending in own plane) gross section	Flat plates with compression edge free, tension edge supported	17	28	$b/t = 8.9$	$40.5 - 1.41\,b/t$	$b/t = 19$	$4{,}900/(b/t)^2$
			16†	$b/t = 17$	$40.5 - 1.41\,b/t$	$b/t = 19$	$4{,}900/(b/t)^2$
	Flat plate with both edges supported	18	28	$h/t = 46$	$40.5 - 0.27\,h/t$	$h/t = 75$	$1520/(h/t)$
			16†	—	16†	$h/t = 95$‡	$1520/(h/t)$
	Flat plate with horizontal stiffener, both edges supported	19	28	$h/t = 107$	$40.5 - 0.117\,h/t$	$h/t = 173$	$3500/(h/t)$
			16†	—	16†	$h/t = 219$‡	$3500/(h/t)$
SHEAR IN WEBS, gross section	Unstiffened flat webs	20	12	$h/t = 36$	$15.6 - 0.099\,h/t$	$h/t = 65$	$39{,}000/(h/t)^2$
			7.5†	—	7.5†	$h/t = 72$‡	$39{,}000/(h/t)^2$
	Stiffened flat webs $a_s = a_1/\sqrt{1 + 0.7(a_1/a_2)^2}$	21	12	—	12	$a_s/t = 66$	$53{,}000/(a_s/t)^2$
			7.5†	—	7.5†	$a_s/t = 84$‡	$53{,}000/(a_s/t)^2$

Item # KNH1210JMSY, Heavy Duty Inserts

KNH, MS51831, NAS1395 Series

larger image

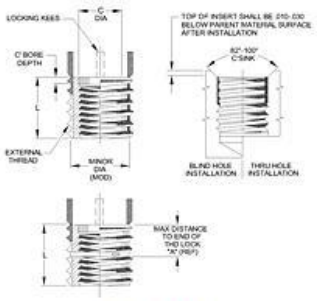

larger image

Specifications

Insert Type	Heavy Duty
Material	Chrome Moly Steel, Type 4140 per MIL-S-5626 or Type 8740 per AMS 6322, 125 KSI Minimum Tensile Strength
Finish Description	Cad plate per AMS-QQ-P-416 Type II, Class 3
Lube Description	No lubricant
Internal Thread Lock	No
Internal Thread Size	.7500-10 UNJC-3B
External Thread Size	1.1250-12 UNF-2A
Modified Minor Diameter	1.050/1.040
Shear Engagement Area (in²) Ref.	2.4901
C DIA ±.005	0.763
C'Bore Depth ±.010	0.1
L ±.010	1.125
Tap Drill Diameter	1.067/1.061
C'Sink Diameter +.010 -.000	1.145
Thread Tap Size	1.1250-12 UNF-2B
Thread Tap Depth Min	1.31