Fermilab

Particle Physics Division
Mechanical Department Engineering Note

Number: MD-ENG-249 Date: 21 May 2010

Project Internal Reference:

Project: NOvA

Title: FHEP Lower Frame Lifting Lugs

Author(s): Mike Zuckerbrot

Reviewer(s): DAVE PUSHKA 5/27/2010

Key Words: NOvA, FHEP, lower frame

Applicable Codes: AISC Manual of Steel Construction 9th edition
Design of below the hook lifting fixtures, 2005 ed.

Abstract Summary:

The FHEP lower frame will be lifted by four points, two of which are straight lifting lugs with swivel eye bolts at the top. These two lugs and their bolted connections will be analyzed for stress with hand calculations and an FEA analysis.

Zuckerbrot 5-21-10

Fermilab

Fermi National Accelerator Laboratory
P.O. Box 500 • Batavia, Illinois • 60510

FHEP lower frame lifting lugs

Discussion

→ The FHEP lower frame wieghs about 16 tons (I-deas wieght); it will be lifted by four connections.

→ Two swivel eye-bolts

→ Two lifting lugs to be analyzed here

→ 4 tons each → 8000# ⇒

→ Lug is 36 ksi steel

→ Bolts are A325; 3/4"-10

→ Sling angle limited to 45°*

* see page 5 for sling angle

Fermilab

Fermi National Accelerator Laboratory
P.O. Box 500 • Batavia, Illinois • 60510

Lug Dimensions

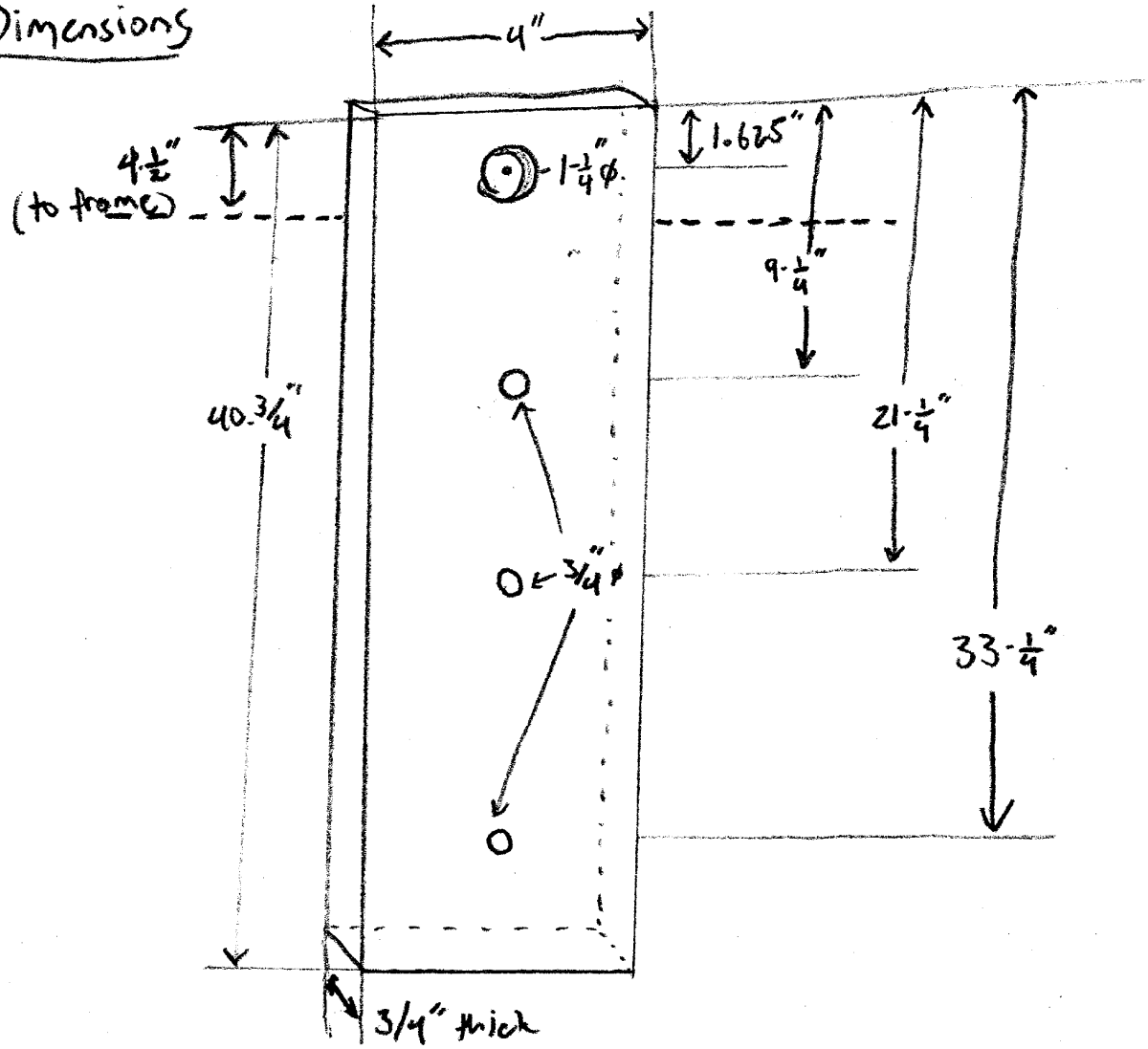

Lug Loading

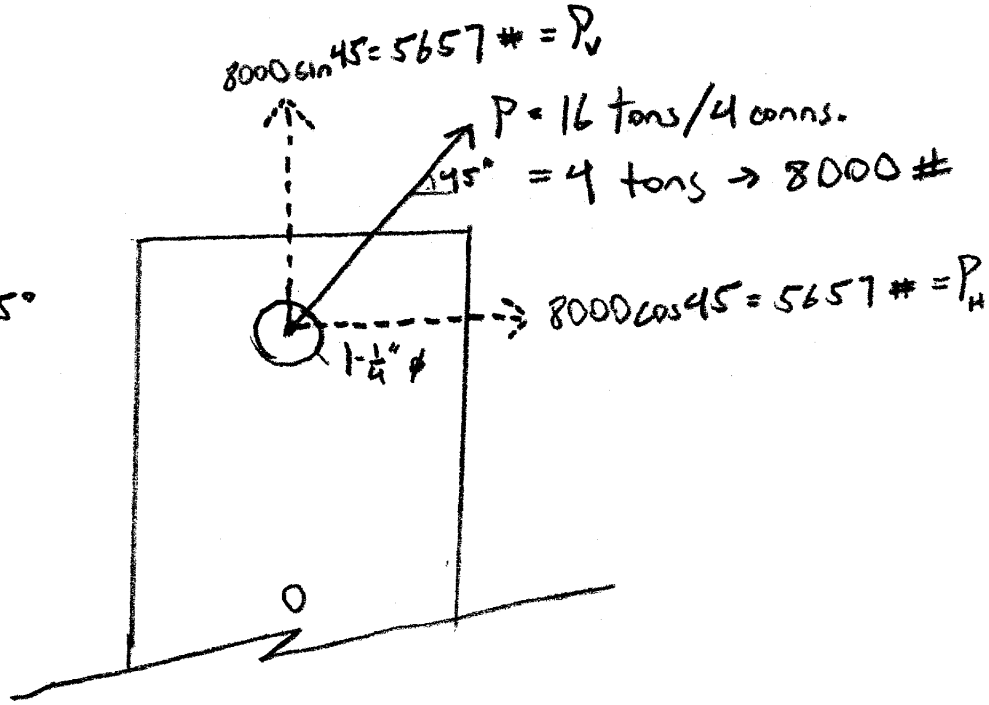

→ limit sling to 45°

Zuckerbrot 5-21-10

Fermilab

Fermi National Accelerator Laboratory
P.O. Box 500 • Batavia, Illinois • 60510

Lug Stresses

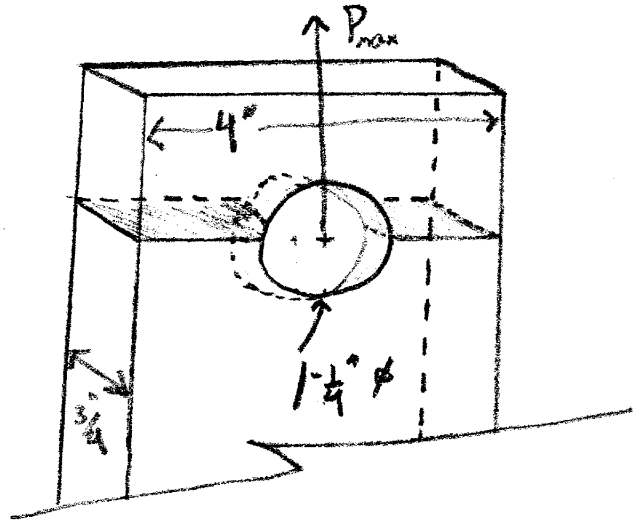

→ Tensile stress

+ $P_{max} = 8000\#$

+ $\sigma_{allowable} = \frac{F_y}{3} = \frac{36}{3} = 12$ ksi

+ $\sigma_T = \frac{P}{A_T} = \frac{8000\#}{(4-1\frac{1}{4})'' \, 3/4''}$

$\sigma_T = 3879$ psi < 12 ksi ok

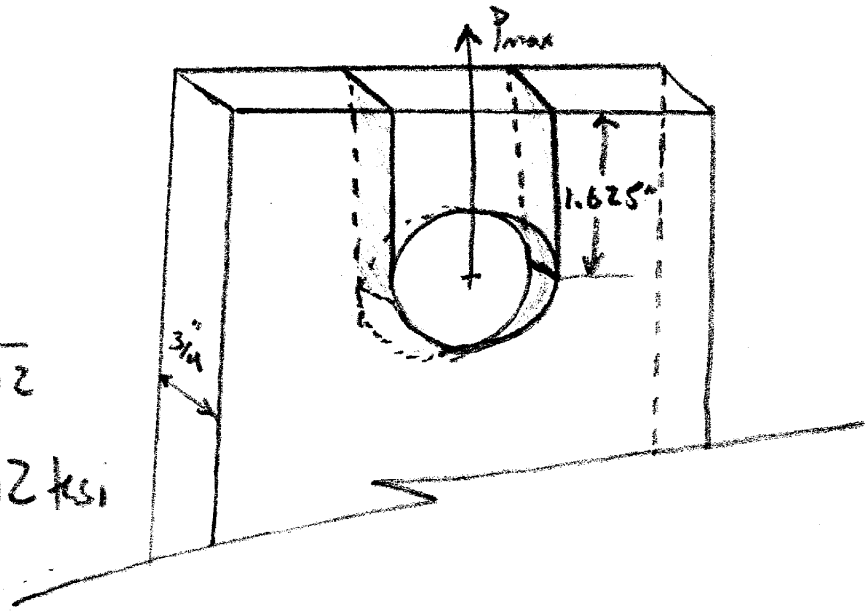

→ Shear stresses

+ $P_{max} = 8000\#$

+ $\sigma_{allowable} = 12$ ksi

+ $\sigma_v = \frac{P}{A_v} = \frac{8000\#}{(1.625 \times \frac{3}{4})2}$

$\sigma_v = 2188$ psi < 12 ksi

ok

Fermilab

Fermi National Accelerator Laboratory
P.O. Box 500 • Batavia, Illinois • 60510

→ Bending Stress

$$\sigma_B = \frac{Mc}{I}$$

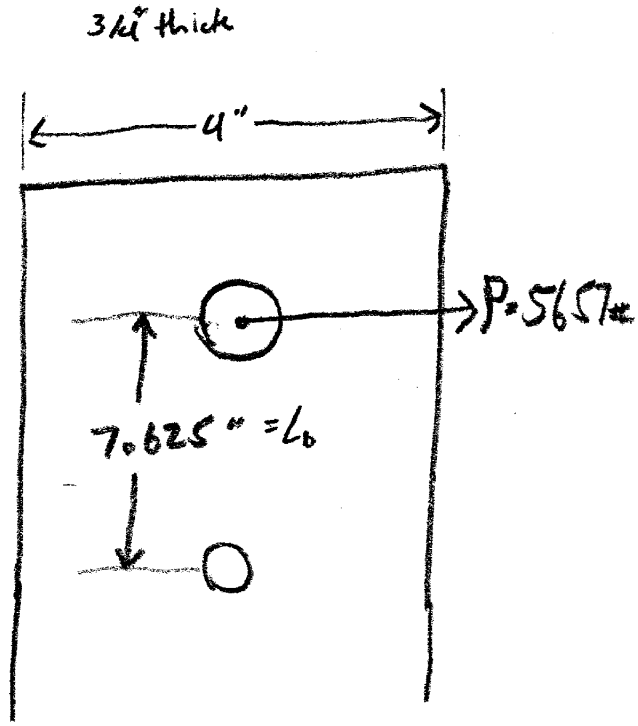

$M = 5657\#(7.625") = 43{,}135\ \#\cdot in$

$c = 2"$

$I = \frac{1}{12}(3/4)(4)^3 = 4\ in^4$

$$\sigma_B = \frac{(43{,}135)(2)}{(4)} = 21{,}568\ psi$$

→ Allowable bending stress (acc. Below the hook lifting fixtures ASME-BTH-1-2005, 3-2.3.3, 3-2.3.4)

- when $\frac{L_b d}{t^2} \le \frac{.08E}{F_y}$ → $\frac{(7.625)(4)}{(3/4)^2} \overset{?}{\le} \frac{.08(3\times10^3)}{36{,}000}$

$54.2 \overset{?}{\le} 66.7$ ✓

$F_b = \frac{1.25(F_y)}{N_d}$; design factor A → $N_d = 2$

$$F_b = \frac{1.25(36)}{2} = 22.5\ ksi > \sigma_B \quad \underline{ok}$$

→ Combined axial and Bending stress ; $\frac{f_a}{F_t} + \frac{f_b}{F_b} \le 1$

$\frac{3879}{12{,}000} + \frac{21568}{22{,}500} = 1.28 > 1$ $\boxed{\text{no}}$ * see next page

Fermilab

Fermi National Accelerator Laboratory
P.O. Box 500 • Batavia, Illinois • 60510

→ Since combined axial and bending stresses are greater than allowable, a new limiting angle will be reverse calculated.

$$\frac{f_a}{F_a} = \frac{3879}{12{,}000} = .32325 \rightarrow$$

$$\frac{f_b}{F_b} \text{ must be } < 1 - .32325 = .67675$$

($f_{b_{max}}$ →) → $F_b = 22.5$ ksi ; $f_{b_{max}} = 15{,}226$ psi

(M_{max} →) $15{,}226 = \frac{M_{max}(2)''}{(4\ in^4)}$ → $M_{max} = 30{,}452$ #·in

(P_{max} →) $30{,}452$ #·in $= P_{max}(7.625'')$ → $P_{max} = 3993$ #

(Θ_{min} →)

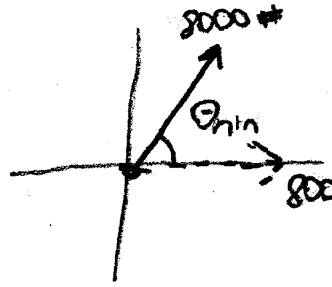

$8000 \cos\Theta_{max} = 3993$ # → $\Theta_{min} = 60°$

→ Sling angle must be a minimum of 60° off the horizontal to avoid exceeding allowable stress.

Zuckerbrot 5-21-10

Fermilab

Fermi National Accelerator Laboratory
P.O. Box 500 • Batavia, Illinois • 60510

Bolt Stresses

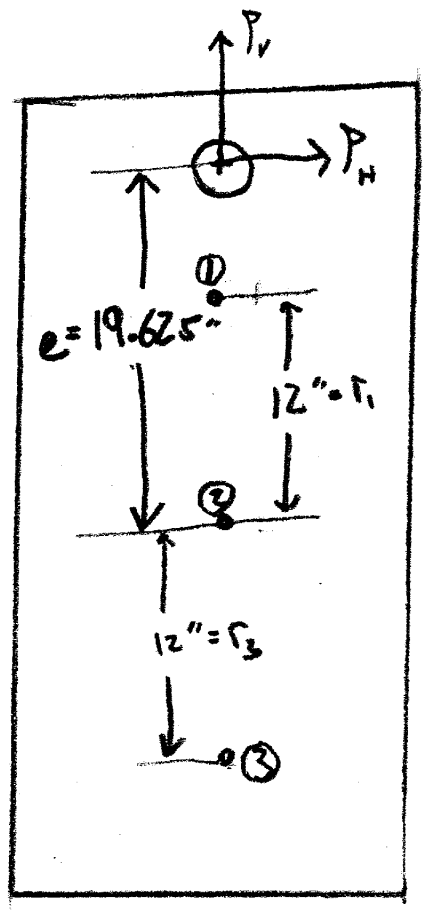

+ $P_V = P_H = 5657\#$
+ Bolt 2 is the centroid of the bolt pattern
+ Reaction forces will be broken down into ver. and hor. reactions for analysis
+ A325 bolts in bearing type connection with thread in the shear plane, max all-wable stress $F_a = 21$ ksi

→ Vertical reaction force $= \dfrac{P_V}{\#\text{ of bolts}} = \dfrac{5657\#}{3 \text{ bolts}}$

$F_V = 1886\#$ per bolt

→ Horizontal reaction force

+ Primary force $= \dfrac{P_H}{\#\text{ of bolts}} = \dfrac{5657\#}{3 \text{ bolts}}$

$F_{H,p} = 1886\#$ per bolt

Zuckerbrot 5-21-10

Fermilab

Fermi National Accelerator Laboratory
P.O. Box 500 • Batavia, Illinois • 60510

+ Secondary reaction force

$$F_{H,S} = rk \quad ; \; r = 12''$$

$$P_H e = k(r_1^2 + r_2^2 + r_3^2)$$

$$5657 \cdot (19.625'') = k(12^2 + 0^2 + 12^2)$$

$$\rightarrow k = 385 \; \#/in$$

$$F_{H,S} = 385 \; \#/in \; (12'') = 4626 \; \# \; \angle 45°$$

Bolt 1 FBD

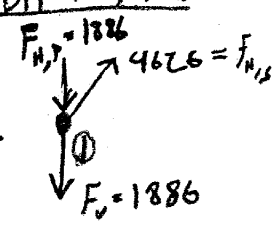

$$F_{H,S_H} = F_{H,S_V} = 4626(.707) = \underline{3270} \; \# \text{ per bolt}$$

→ Total Force

$$F_{Total} = \left[F_{H,Total}^2 + F_{V,Total}^2 \right]^{1/2}$$

$$F_{Total} = \left[(3270 + 1886)^2 + (3270 + 1886)^2 \right]^{1/2} = 7292 \; \#$$

(bolts 1+3)

→ Stress

$$\sigma = \frac{F_{Total}}{A_b} = \frac{7292 \; \#}{\frac{1}{4}\pi (3/4)^2} = 16{,}506 \text{ psi} < 21 \text{ ksi}$$

ok

Lug with 8000# force at 45 degrees

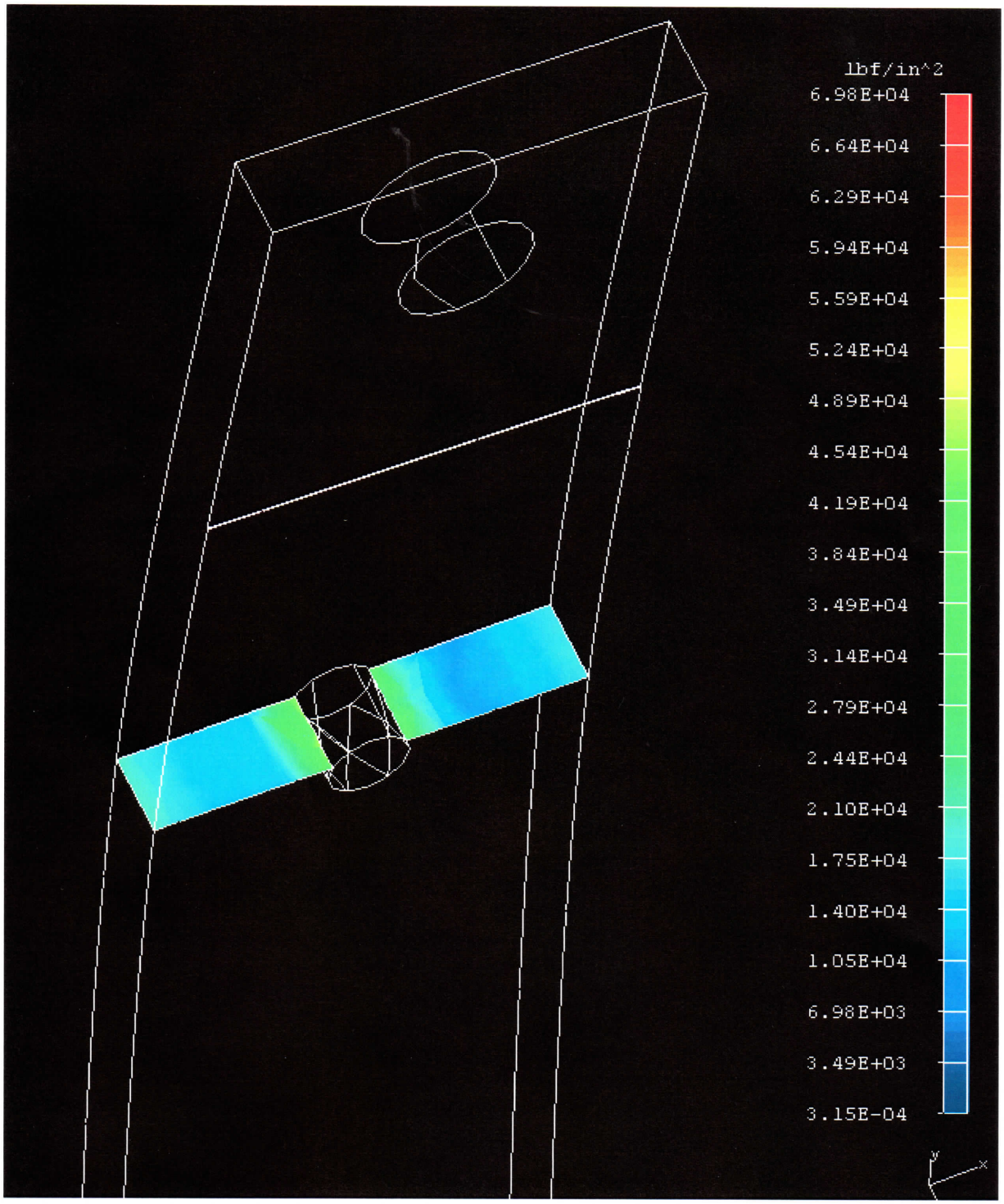

Main stresses with the sling angle at 45 degrees are 20 ksi or under and coincide with hand calculations

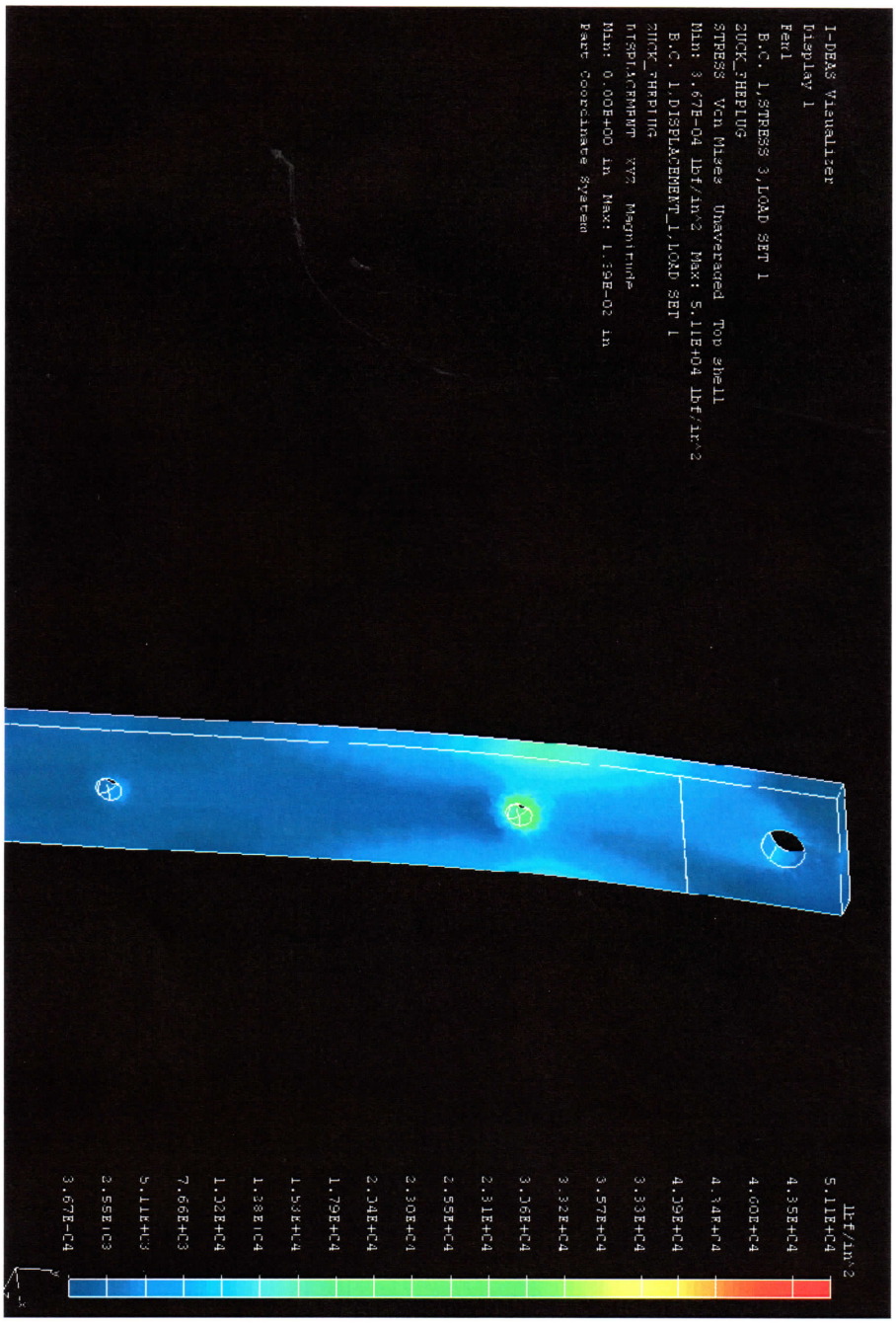

8000# force at 60 degrees off the horizontal

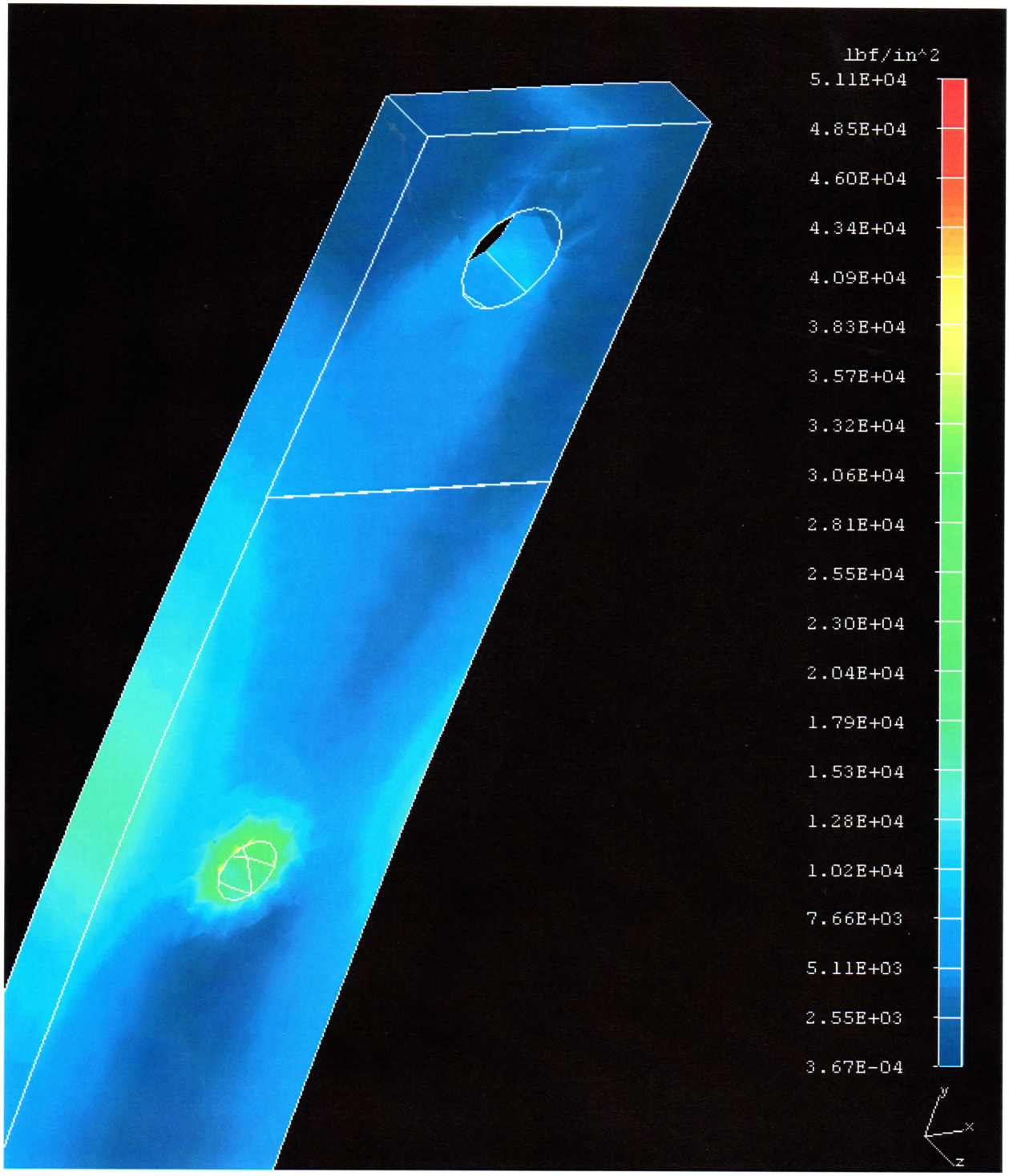

Close up with the 8000# force at a 60 degree angle from the horizontal.

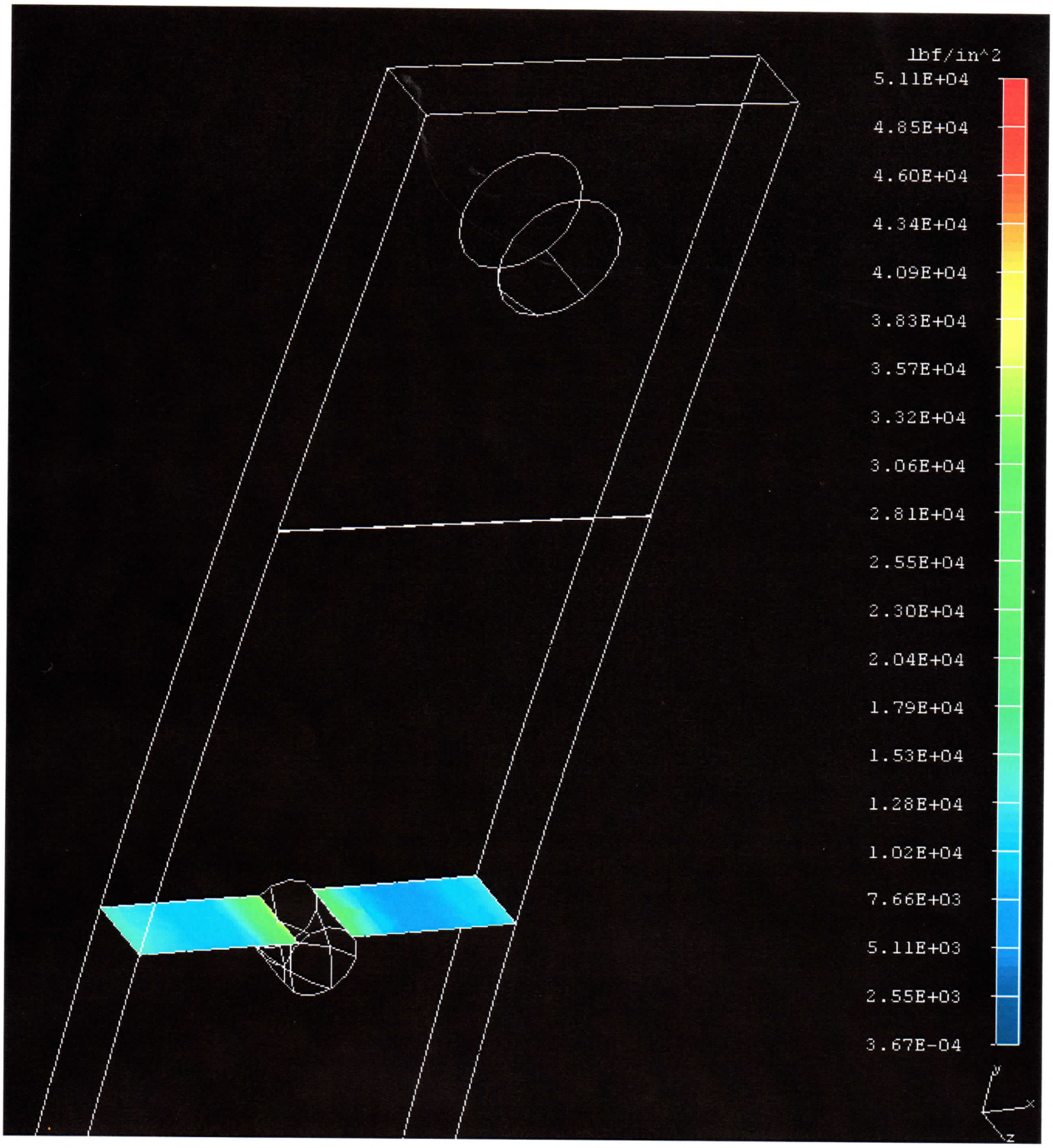

Plane view of the lug's top bolt hole with the 8000# force at a 60 degree (off the horizontal) angle; main stresses have been reduced to 15 ksi or less.