Fermilab

Particle Physics Division
Mechanical Department Engineering Note

Number: MD-ENG-229 Date: 10 February 2010

Project Internal Reference: Lifting Fixture ID number 172

Project: NOvA FHEP at CDF

Title: NOvA FHEP Bookend Lifting Fixture Engineering Note

Author(s): Dave Pushka

Reviewer(s):

Key Words: Lifting Fixture ID 172, NOvA, FHEP (full height engineering prototype), CDF (location where used).

Abstract Summary: Calculations for lifting fixture with ID number 174

Applicable Codes: ASME B30.20, FESHM 5022

Discussion:

The NOvA FHEP (Full Height Engineering Prototype) is being built in the assembly pit at CDF. The bookend needs to be lifted. A special, low head height lifting fixture is being built to allow this to be conducted safely. One could argue that this is a lifting lug for the bookend and not a below-the-hook lifting fixture. But, the same criteria for below-the-hook lifting fixtures is being applied.

Calculations include the device used to proof test the lifting fixture.

The bookend for the NOvA FHEP weighs 23,000 pounds and needs to be lifted from a horizontal position and rotated to a vertical position. This fixture allows these loads while being connected to the 50 ton capacity hook.

5022TA

BELOW-THE-HOOK LIFTING DEVICE

Lifting Device Numbers:

FNAL Site No/ _____ Div. Specific No. 172 Asset No. _____

If applicable If applicable If applicable

ASME B30.20 Group: (check one)

[X] Group I Structural and Mechanical Lifting Devices
[ ] Group II Vacuum Lifting Devices
[ ] Group III Magnets, Close Proximity Operated
[ ] Group IV Magnets, Remote Operated

Device Name or Description NOvA FHEP Bookend Lifting Fixture

Device was (check all applicable)

[ ] Purchased from a Commercial Lifting Device Manufacturer. Mfg Name _____
[ ] Designed and Built at Fermilab
[X] Designed by Fermilab and Built by a Vendor. Assy drawing number 3929.220-MD-466722
[ ] Provided by a User or other Laboratory
[ ] Other: Describe _____

Engineering Note Prepared by Dave Pushka Date 2-10-2010

Engineering Note Reviewed by _____ Date _____

Lifting Device Data:

Capacity 23,000 pounds

Fixture Weight 1060 pounds

Service: [X] normal [ ] heavy [ ] severe (refer to B30.20 for definitions)

Duty Cycle ___n/a____ 8, 16 or 24 hour rating (applicable to groups III, and IV)

Inspections Frequency Before use

Rated Load Test by FNAL (if applicable) Date 4/18-2010 Load 30,000 pound

[ ] Check if Load Test was by Vendor and attach the certificate

Satisfactory Load Test Witnessed by: Dave Pushka and Steve Ruzzano

Signature (of Load Test Witness) _____

Notes or Special Information:

Photograph 1, test in orientation when lifting the bookend just off the floor.

Photograph 2, test in orientation when lifting the bookend vertical.

Photograph 3, Scale showing load of 30,000 pounds.

Photographs 4, 5 and 6, showing alternate views of load tests.

Images:

NOvA FHEP in CDF:

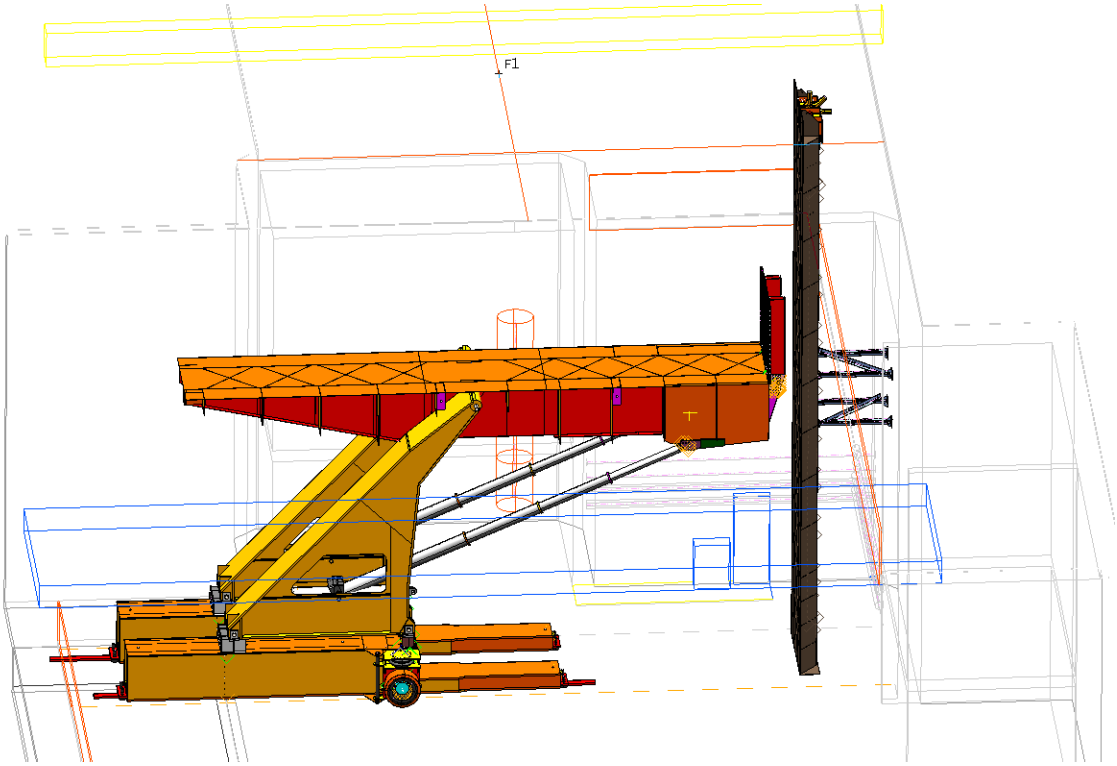

Close Up of Bookend and Bookend Lifting Fixture:

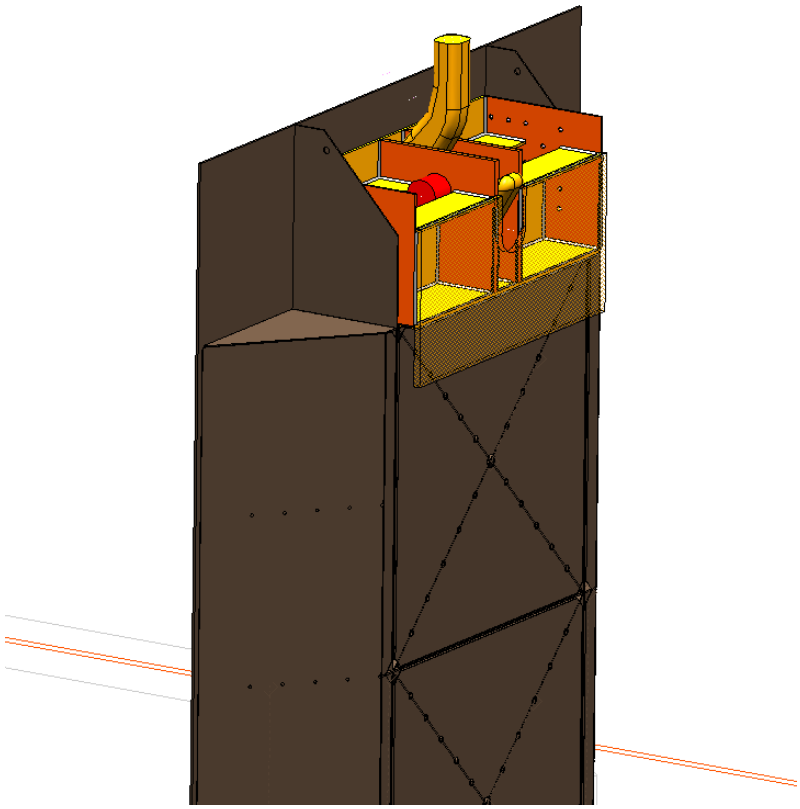

Image of Lifting Fixture shown with a rough model of the CDF crane hook. Note Pin is missing for clarity.

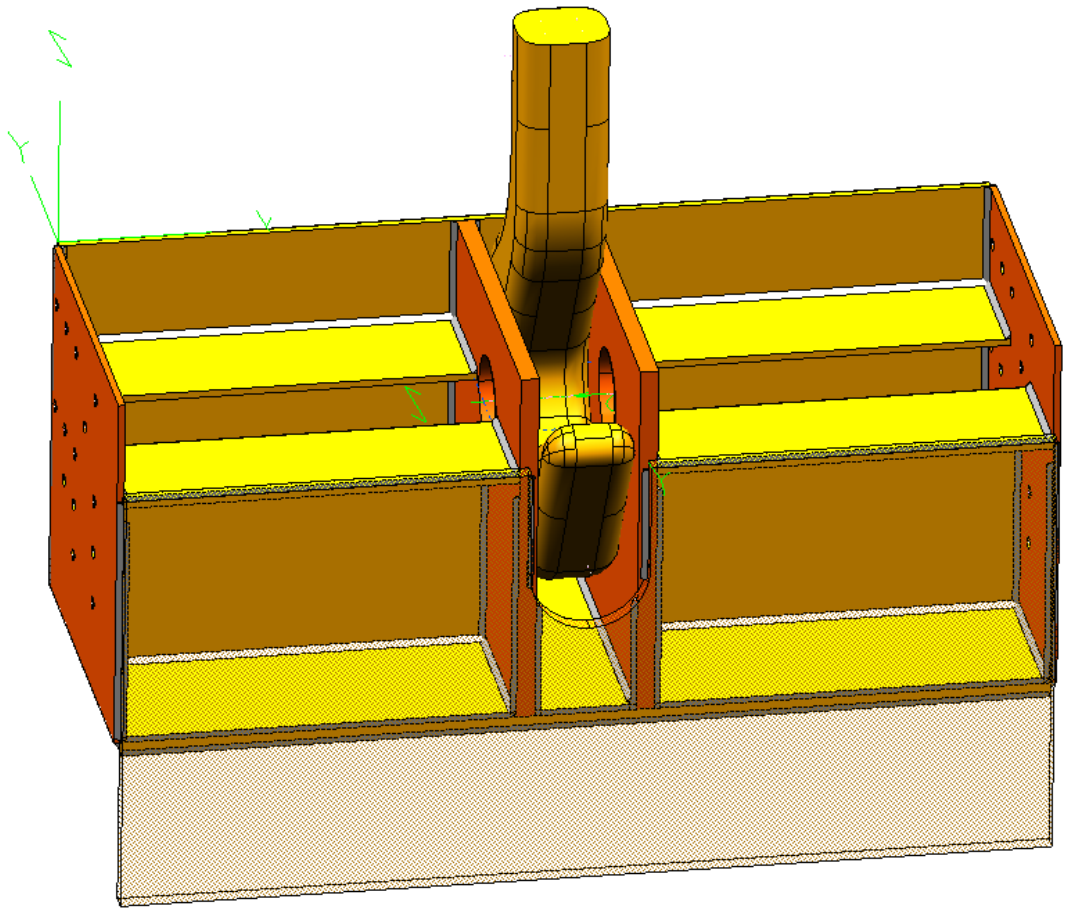

Note holes on the sides of the fixture are for where the fixture is to bolt to the webs of the bookend.

Image of Lifting Fixture with the Lifting Fixture Test Fixture attached (bolting missing intentionally):

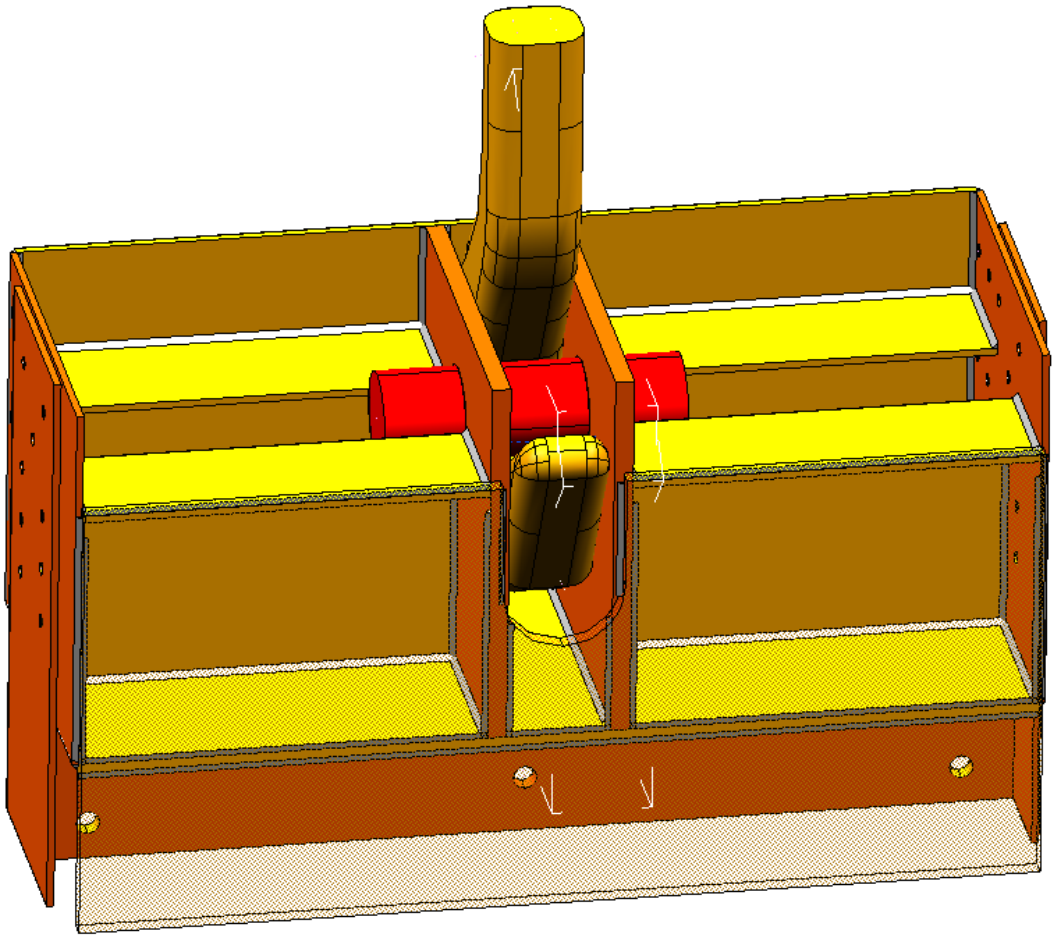

Results of a finite element analysis performed using Ideas and a half model (exploits plane of symmetry about crane hook centerline) are shown below. Loads used in the boundary conditions are 12,000 pounds for the vertical load condition (includes one half of the 23,000 pound bookend weight and one half of the 1000 pound fixture weight). For the horizontal load condition (this occurs when the bookend is lying on the ground, in the horizontal orientation) a 7000 pound load was used (7000 pounds is more than the one quarter of the combined bookend and fixture weight).

Using A36 plate material, the bulk stress needs to be less than 1/3 of the yield stress per B30.20. However, the bulk stress needs to be less than 12,000 psi. Local peak stresses can be averaged over a small area as long as the bulk stresses in this area remain below the B30.20 criteria.

Image showing Stress and Deflection of the lifting fixture when under a 23,000 pound vertical load. Peak stress is 7,580 psi and peak deformation magnitude is 0.0056 inches.

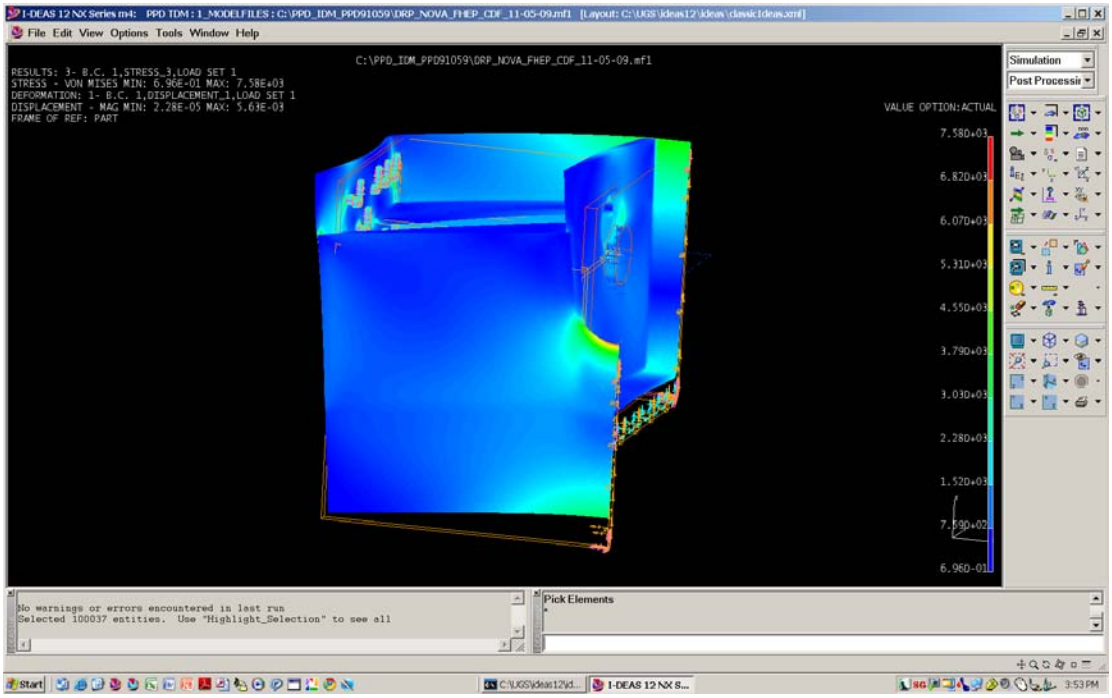

Image showing Stress and Deflection of the lifting fixture when under a 14,000 pound horizontal load. Peak Stress is 16,500 psi and the peak deformation magnitude is 0.0082 inches. Local bulk stress is well below the 12,000 psi limit to conform to B30.20.

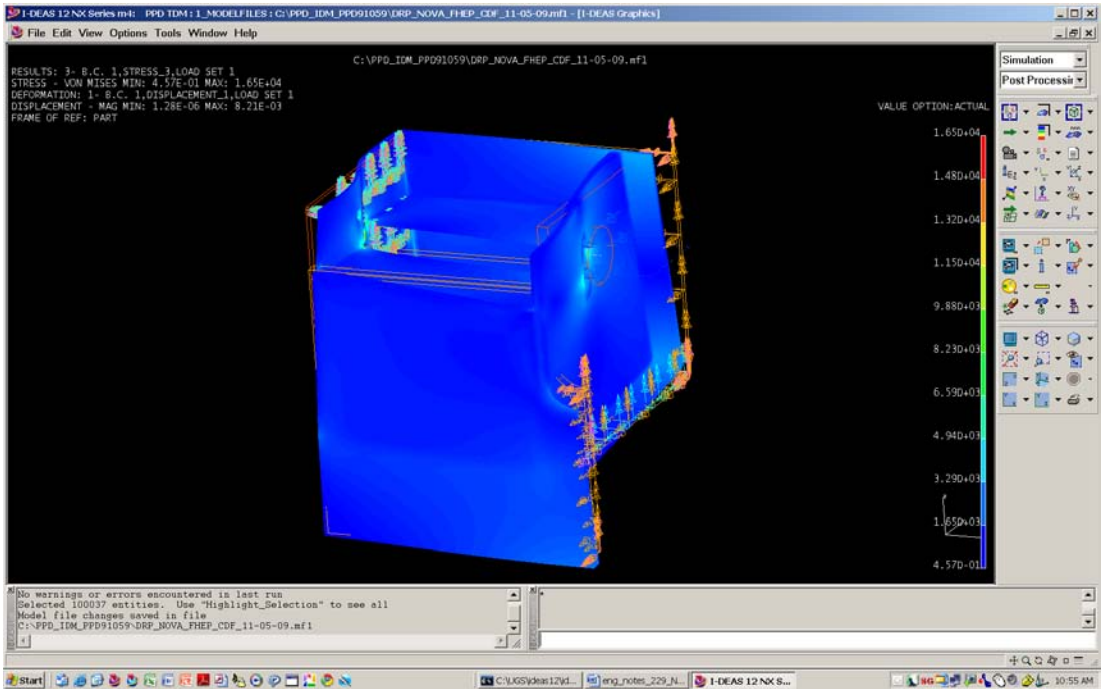

Below Image shows the test fixture used to load test the lifting fixture. This is not a below the hook lifting fixture and therefore the 1/3 yield limit does not apply. For a load of 14,375 pounds (one half of 23,000*1.25) applied at the shackle hole on the lower left, the stress is only 14. ksi. Deflection is 0.013 inches.

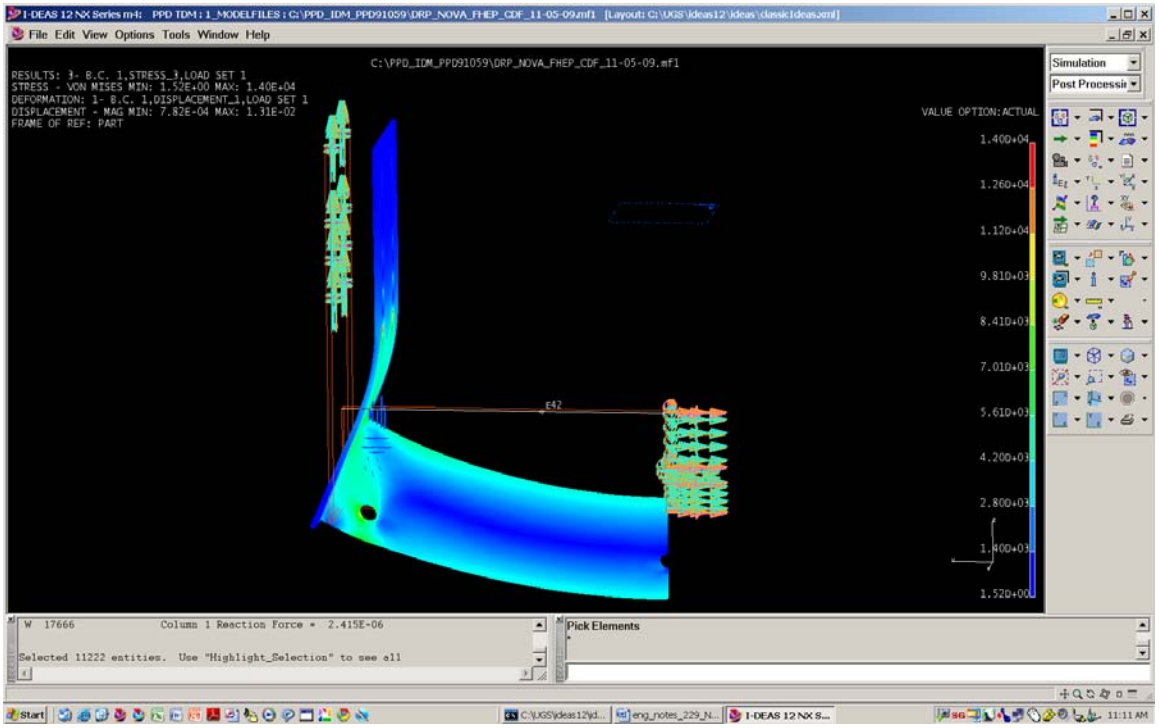

Hand Calculations for the Pin used to engage the crane hook:

Pin diameter:	5.0 inches
Pin Material Yield Stress	30,000 psi
Allowable Shear Stress for Pin per B30.20	10,000 psi
Pin Span	6 inches
Number of Shear Planes on Pin	2
Pin Shear Area per Shear Plane (π/4*D^2)	19.6 square inches
Pin Load (bookend weight + fixture weight)	24,000 pounds
Pin Shear Stress (Load/# shear planes/area)	611 psi

Pin Shear Stress is less than the allowable, therefore, okay

Pin Bending Moment (M = Pa)	72,000 inch – pounds
Pin Moment of Inertia (I = 1/64*π*d^4)	30.66 inches ^4
Pin Bending Stress (σ = My/I)	5870 psi

Pin Bending Stress is less than the allowable, therefore, okay