Fermilab

Particle Physics Division
Mechanical Department Engineering Note

Number: MD-ENG- 093 Date: Oct. 28, 2005

Project Internal Reference:

Project: **SMTF**

Title: Vacuum Vessel Engineering Note for SMTF Horizontal Cryostat Test Vessel

Author(s): Edward Chi

Reviewer(s):

Key Words:
Cryostat, Vacuum, Pressure, Vessel Shell, Stiffening Rib, Multiple Openings, Reinforcement, Flange, Weldment, Dished Vessel Head.

Abstract Summary:
The vacuum vessel of SMTF horizontal cryostat test vessel has 38.00" O. D, ~ 82.30" Length with multiple openings for different connections and instrumentation. This engineering note is presented with extensive discussions, analysis and calculations for the vessel and nozzle shells, stiffening rings, multiple openings and reinforcements, different flanges, welds and others per Fermilab, ASME and other applicable codes.

Applicable Codes:
ES&H Manual Chapter 5033, Fermilab.
"Boiler & Pressure Vessel Code" ASME VIII, Div.1, 2004 Edition
"Structural Welding Code-Steel", AWS D1.1-90
"Pressure Vessel Handbook", 7th edition, by Eugene F. Megysey

EXHIBIT A-1

Vacuum Vessel Engineering Note
(per Fermilab ES&H Manual Chapter 5033)

Prepared by	Edward Chi	Date	10-28-2005	Div/Sec	PPD/MD/ME
Reviewed by		Date		Div/Sec	
Div/Sec Head		Date		Div/Sec	

1. Identification and Verification of Compliance

Fill in the Fermilab Engineering Conformance Label information below:

This vessel conforms to Fermilab ES&H Manual Chapter 5033

Vessel Title	*SMTF Horizontal Cryostat Test Vessel*
Vessel Number	
Vessel Drawing Number	*4906.390 – ME - 439769*
Internal MAWP	*1 psig*
External MAWP	*14.7 psi*
Working Temperature Range	*20* °F *100* °F
Design/Manufacturer	Fermilab
Date of Manufacture	
Acceptance Date	

Director's signature (or designee) if vessel is for manned area and requires an exception to the provisions of this chapter.

Amendment No.	Reviewed by:	Date:

Laboratory location code _____
Laboratory property number _____
Purpose of vessel _____

List all pertinent drawings

Drawing No.	Location of Original
4906.390 – ME – 439769 -1	
4906.390 – ME – 439769 -2	
4906.390 – ME - 439747	
4906.390 –MD - 439871	

2. Design Verification

Provide design calculations in the Note Appendix.
See the attached vacuum vessel engineering note #MD-Eng-093

3. System Venting Verification

Can this vessel be pressurized either internally or externally? [ ] Yes
[X] No

If "Yes", to what pressure? _____

List all reliefs and settings. Provide a schematic of the relief system components and appropriate calculations or test results to prove that the vessel will not be subjected to pressures greater than 110% beyond the maximum allowable internal or external pressure.

Manufacturer	**Relief**	**Pressure Setting**	**Flow Rate**	**Size**

4. Operating Procedure Section

Is an operating procedure necessary for the safe operation of this vessel?
[ ] Yes [X] No *(If "Yes", it must be appended)*

Is a testing procedure necessary for the safe acceptance testing (acceptance testing) of this vessel?

[ ] Yes [X] No

If "Yes", the written procedure must be approved by the division head prior to testing and supplied with this Engineering Note.

5. Welding Information

Has the vessel been fabricated in a Fermilab shop? [ ] Yes [X] No

If "Yes," append a copy of the welding shop statement of welder qualification.

The fabrication will be performed by using qualified welder of an outside contractor.

6. Exceptional, Existing, Used and Non-Manned Area Vessels

Is this vessel or any part thereof in the above categories? [ ] Yes
[X] No

If "Yes" follow the Engineering Note requirements for documentation and append to note.

CONTENTS

Section	*Descriptions*	*Pages*
i.	Exhibit A-1, Fermilab ES&H Manual Chapter 5033	2
1.	Calculations for the Vacuum Vessel Cylindrical Shell Thickness	7
2.	The Permissible Out of Roundness of the Vessel Cylindrical Shell	9
3.	Analysis and Calculations for the Stiffening Rings	
3.1	To Define the Front End Flange as the Stiffening Ring for the Vessel Shell Under the External Pressure	10
3.2	To Define the Rear End Flange as the Stiffening Ring for the Vessel Shell Under the External Pressure	13
4.	Calculations and Analysis for the Vessel Shell Openings	
4.1.	Calculations for the Opening of the Central Middle Port (#14) for the Reinforcement and the Weld Size	14
4.2.	Calculations for the Opening of MC Port (#9) for the Reinforcement and Weld Size	19
4.3	Calculations for the Opening of Port (#20) for the Reinforcement and the Weld Size	23
4.4	Calculations for the Opening of Port (#15) for the Reinforcement and the Weld Size	26
4.5	Calculations for the Opening of Port (#17) for the Reinforcement and the Weld Size	29
5.	Calculations and Analysis for the Flanges, Bolts and Welds	
5.1	Front End Flange and the Front Vessel Head	33
5.2	Rear End Flange and the Rear Vessel Head	42
5.3	Calculations for Flanges #6, #5 and #4	46
6.	The Discussions of the Saddle support Design	48
7.	Calculations for the Vacuum Formed Head Shell Thickness	51

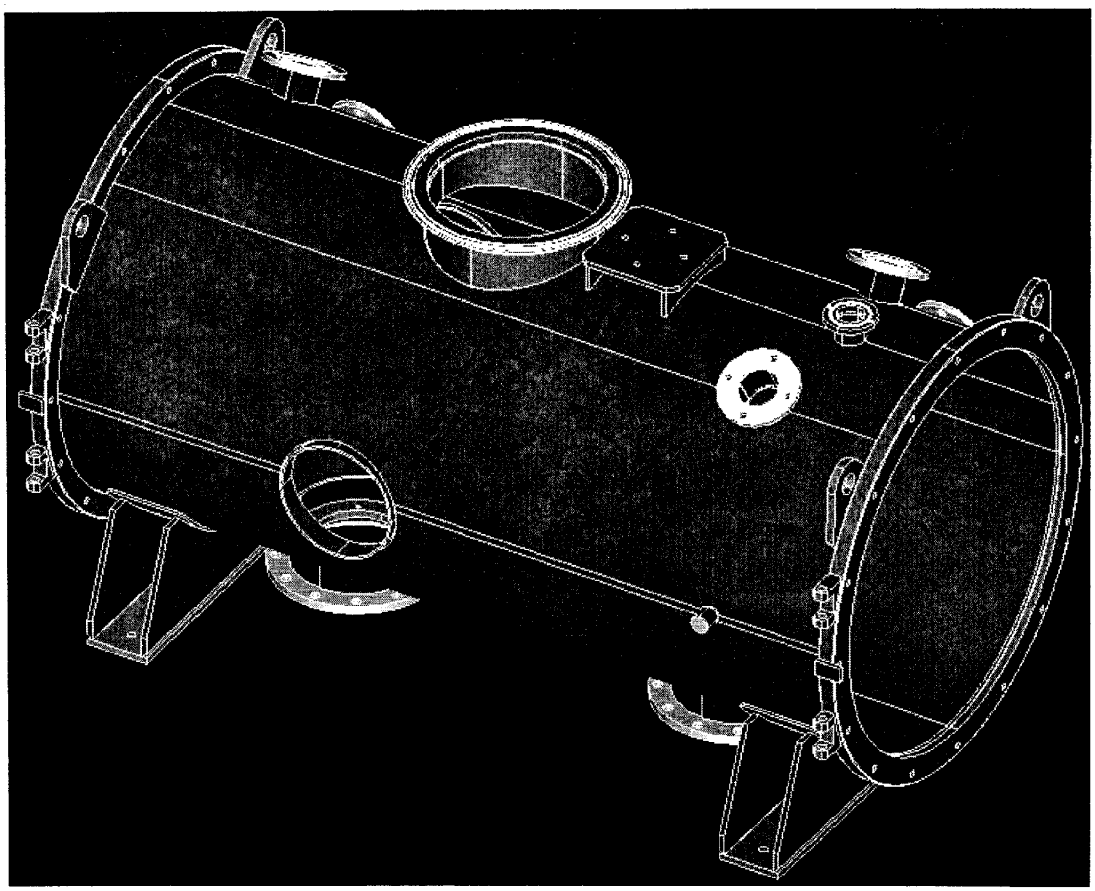

Figure i.1, An Overall View of the SMTF Horizontal Test Cryostat Vessel Weldment

Reference drawing: ME – 439769- 1(2)
Overall length ≈ 82.30 in
$W_{ws} \approx 1{,}695$ lbs. the weight of the horizontal test vessel shell weldment.

$W_{fh} = W_{rh} \approx 305$ lbs. the weight of the front and rear dished head weldment
(Ref. drawing: MD – 439871, overall length = 12.287 in)

$W_{vt} \approx 1.10 \times (W_{ws} + W_{rh} + W_{fh}) = 2{,}536$ lbs.

Assuming the vessel shell and the other parts will be operated under the temperature of -20° F to 100° F
Vessel shell material: SA 240-304L
Materials for flanges, ports and nozzles: see respective notes and drawings.

Notes: During the period of creating engineering note, the configuration of the vessel, vessel heads and other accessories also under continuous design modifications. To these end, some data applied on the note probably are not the final actually design data, however, it was under such considerations:

- The data deviations are negligible for the analysis and calculation.
- It is a conservation assumption and approach.

1. Calculations for the Vacuum Vessel Cylindrical Shell Thickness

The Vacuum Vessel Cylindrical Shell:

Given:

- P: 14.7 psi, the external design pressure,
- D_o: 38.00 in, outside diameter of the vessel shell
- D_i: 37.25 in, inside diameter of the vessel shell
- t_n: The nominal vessel shell thickness.
- F_a: 16,700 psi, the max. allowable stress of the shell material under the operating temp, -20° F to 100° F, also know as S_v. for vessel shell material SA 240-304L, stainless steel, see dwg. #ME-439747 (per Table 1A, part D, section II, ASME VIII, 2004 edition)
- L_v: Design length of the vessel between lines of the support.

Assuming:

$L_v \approx 82.30$ in (per drawing #ME-439769-01)

Find out the required vessel shell thickness t_n:

1. Try $t_n = 0.25$"
   $L_v/D_o = 82.30" / 38" = 2.166$
   $D_o/t_n = 38.00" / 0.25" = 152$

   Per section UG-28, also Fig. G and Fig. HA-3 in Subpart 3 of Section II, part D, ASME VIII, Div. 1:
   It is found out that:
   A = 0.00032
   B = 4500
   Then:
   $P_a = (4B) / (3D_o/t_n)$
   $= (4 \times 4500) \div (3 \times 152)$
   $= 39.47$ psi
   where:
   P_a : The max. allowable external working pressure, psi
   A: Factor determined from Fig. G
   B: Factor determined from the applicable material chart in Fig. HA-3.

2. Try $t_{r2} = 0.1875$
   $L_v/D_o = 2.166$
   $D_o/t_{r2} = 38"/0.1875" = 203$

   Find:
   $A \approx 0.00022$
   B = 3050
   Then:

$P_{a2} = (4B) / (3D_o/t_n)$
$= (4 \times 3050) \div (3 \times 203)$
≈ 20.03 psi

3. Try $t_{r3} = 0.165$
$L_v/D_o = 2.166$
$D_o/t_{r3} = 38.00''/0.165 = 230$

Find:
$A \approx 0.00018$
$B = 2550$
Then:
$P_{a3} = (4B) / (3D_o/t_n)$
$= (4 \times 2550) \div (3 \times 230)$
≈ 14.78 psi

So, $\mathbf{t_r = 0.165''}$

So the vessel shell thickness is required 0.165", using 0.375" as vessel shell thickness is above the shell thickness required and it is satisfactory.

2. The Permissible Out of Roundness of the Vessel Cylindrical Shell

Given:

P: 14.7 psi, the external design pressure,
D_o: 38.00 in, outside diameter of the vessel shell
D_i: 37.35 in, inside diameter of the vessel shell
t_n: 0.375", the nominal vessel shell thickness.
F_a: 16,700 psi, the max. allowable stress of the shell material under the operating temp, -20° F to 100° F, also know as S_v. for vessel shell material SA 240-304L, stainless steel, see dwg. #ME-439747 (per Table 1A, part D, section II, ASME VIII, 2004 edition)
L_v: ~ 82.30", design length of the vessel between lines of the support.

The difference between the max. dia and the mini. dia. of the vessel shell at any cross section shall not exceed:

0.01 x 38.00 in = 0.38 in
(per section UG-80 (b)(1) of ASME VIII, Div.1)

Per section UG-80(b)(2) and figure UG-80 of ASME VIII, Div.1, it is found out that the maximum plus or minus deviation from the true circular form, measured radially on the outside or inside of the cylindrical vessel shall not exceed the maximum permissible deviation e:

$e \approx 0.58t$
$= 0.58 \times 0.375$ in
$= 0.217$ in
where:
$D_o / t = 101$
$L_v / D_o = 2.166$

Per Figure UG-29.2, section UG-29 of ASME VIII, Div.1, it is found out that:

Arc length $\approx 0.23\ D_o$
$= 0.23 \times 38.00$ in
$= 8.74$ in
Chord length = 2 x Arc length
= 2 x 8.74 in
= 17.48 in

So, in a chord length of 17.48in, the maximum plus or minus deviation from the true circle form shall not exceed 0.217 in.

3. Analysis and Calculation for the Stffening Rings

3.1 To Define the Front End Flange as the Stiffening Ring for the Vessel Shell Under the External Pressure

Reference drawings: ME-439769, MC-439725

Givien:

$E = 28 \times 10^6$ psi, Modules of elasticity of the flange materials

$l_e = 1.1\ (D_o t)^{0.5} = 1.1\ (38" \times 0.375")^{0.5}$

$= 4.152"$, the effective regional length of the vessel shell

F_y: 25 ksi, min. yield stress of the stiffening material A182-F304L under the operating temperature.

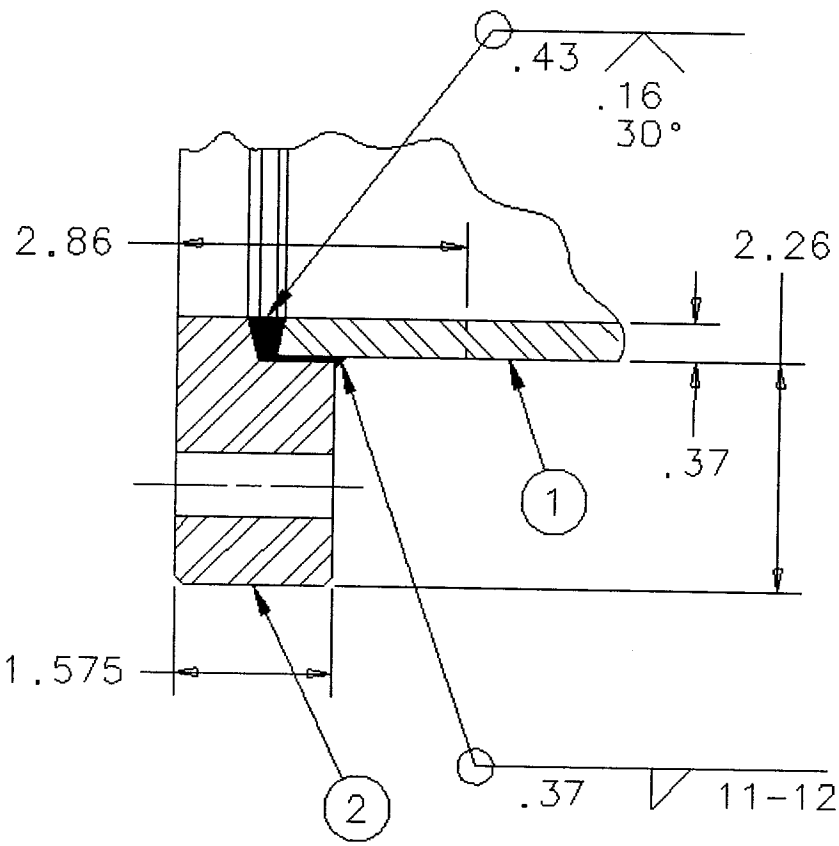

Figure 3.1, The cross-section view of the end flange with the vessel shell, also refer to detail K of drawing ME-439769, and drawing MC-439725.

To find the required moment of inertia of the combined end flange – shell cross section about the neutral axis parallel to the axia of the shell, in^4, I_s':

$I_s' = [D_o^2 L_s(t + A_s/L_s)A] / 10.9$ (eq. 3-2)
(per UG-29, ASME VIII, Div.1)

Where:

A_{sd}: Cross-sectional area of the upstream end flange stiffening area, in^2
$\approx (1.575 \times 2.26) - (0.625 \times 1.575)\ in^2 = 2.575\ in^2$,
(See figure 3.1 and MC-439725)

L_{sd}: Distance between the downstream and upstream end flanges, ~82.30 in
(See drawing ME-439769-2)

B: Factor determined from the applicable chart,
$= 0.75\ [PD_o \div (t + As/Ls)]$
$= 0.75\ [14.7\ psi \times 38.00\ in \div (0.375\ in + 2.575\ in^2/82.30\ in)]$
$= 1031$

Per figure HA-3 in Subpart 3 of section II, Part D, where B = 1031 falling below the left end of the material/temperature curve, so:

$A = 2B/E$
$= 2 \times 1031 / (28 \times 10^6)$
$= 0.00007364$
(per step 5 of UG-29, ASME VIII, Div. 1)

Then the Eq. 3-2 becomes:

$I_s' = \{[38.00^2 \times 82.30 \times (0.375 + 2.575/82.30) \times 0.00007364] / 10.9\} in^4$
$= ((118{,}841 \times 0.4063 \times 0.00007364) /10.9)\ in^4$
$= 0.3262\ in^4$

<u>To find the combined moment of inertia of the cross section area of the stiffening ring and shell</u>

It is found that from the figure 3.1:

$A_1 = 2.86\ in \times 0.375\ in = 1.0725\ in^2$
$A_2 \approx (1.575 \times 2.26) - (0.625 \times 2.26)\ in^2 = 2.575\ in^2$
$y_1 = 0.1875\ in$
$y_2 = 1.505\ in$
$y = (A_1y_1 + A_2y_2) \div (A_1 + A_2)$
$= 1.1175\ in$
$dy_1^2 = (y - y_1)^2 = 0.8649\ in^2$
$dy_2^2 = (y - y_2)^2 = 0.1502\ in^2$
$I_1 = 0.0126\ in^4$
$I_2 = 1.515\ in^4$
$I = \sum I_i + \sum A_i dy_i^2$
$= (1.5276 + 1.3144)\ in^4$

$= \underline{2.842\ in^4} > I' = 0.3262\ in^4$

Since the requirement moment of inertia I' is less than the value of I provided by the combined moment inertia of the end flange(upstream) and vessel shell, so the upstream end flange is satisfactory and it can be treated as a stiffening support of the vessel.

3.2 To Define the Rear End Flange as the Stiffening Ring for the Vessel Shell Under the External Pressure

Reference drawings: Detail L of drawing ME-439769-2,
MC- 439737

L_{su}: Distance between the stiffening ring and upstream end flange, ~ 82.30 in = L_{sd}

A_{su}: ≈ (1.575 x 2.26) – (0.625 X 1.575) in^2 = 2.575 in^2 = A_{sd}

Since using the same flange at the upstream end and the downstream end, also, $L_{su} = L_{sd}$; $A_{su} = A_{sd}$, $D_{ou} = D_{od}$, $t_u = t_d$, from the calculation steps of section 3.1, we can conclude that the requirement moment of inertia $I_u' = I_d'$, the available combined moment inertia $I_u = I_d$, that leads to the conclusion:

$$I_u = I_d = \underline{2.842\ in^4} > I_u' = I_d' = 0.3262\ in^4$$

So the downstream end flange is satisfactory and it can be treated as a stiffening support of the vessel.

4. Calculations and Analysis for the Vessel Shell Openings

4.1 Calculations for the Opening of the central middle Port (#14) for the reinforcement and Weld Size

The main vessel shell:
(ref. drawings: ME-439769, ME-439747)

P: 14.7 psi, external design pressure
D_o: 38.00 in, outside dia. Of the vessel shell.
D_i: 37.25, inside dia. of the vessel shell.
t: 0.375 in, the nominal pipe wall thickness.
F_a: 16,700 psi, the max. allowable stress of the shell material at the operating temp, also know as S_v. at the operating temp., -20^0 F to 100^0 F (per Table 1A, part D, Section II, ASME Boiler & Pressure Vessel Code 2004 edition).
Vessel shell material: SA 240, 304L, stainless steel (see ME-439747)
L_v: Design length of the vessel section between lines of support (see Page UG-28(b)), ≈ 82.30"

Find out the required vessel shell thickness t_r:

1 Try $t_n = 0.25$"
$L_v/D_o = 82.30" / 38" = 2.166$
$D_o/t_n = 38.00" / 0.25" = 152$

Per section UG-28, also Fig. G and Fig. HA-3 in Subpart 3 of Section II, part D, ASME VIII, Div. 1:
It is found out that:
A = 0.00032
B = 4500
Then:
$P_a = (4B) / (3D_o/t_n)$
$= (4 \times 4500) \div (3 \times 152)$
$= 39.47$ psi
where:
P_a : The max. allowable external working pressure, psi
A: Factor determined from Fig. G
B: Factor determined from the applicable material chart in Fig. HA-3.

2. Try $t_{r2} = 0.1875$
$L_v/D_o = 2.166$
$D_o/t_{r2} = 38"/0.1875" = 203$

Find:
A ≈ 0.00022
B = 3050
Then:

$P_{a2} = (4B) / (3D_o/t_n)$
$= (4 \times 3050) \div (3 \times 203)$
≈ 20.03 psi

3. Try $t_{r3} = 0.165$
   $L_v/D_o = 2.166$
   $D_o/t_{r3} = 38.00"/0.165 = 230$

   Find:
   $A \approx 0.00018$
   $B = 2550$
   Then:
   $P_{a3} = (4B) / (3D_o/t_n)$
   $= (4 \times 2550) \div (3 \times 230)$
   ≈ 14.78 psi

   So, $\mathbf{t_r = 0.165"}$

The middle central port:

d_o: 16.00", outside dia. of the port.
D_i: 15.50", inside dia . of the port.
t_n: 0.25", wall thickness of the port.
t_{rn}: required thickness of the port.
L: length of projection defining the thickness portion of integral reinforcement of the port beyond the outside surface of the vessel wall.
E: 28×10^6 psi, modulus of elasticity of the material at the operating temp.
Material: SA 182- F304L stainless steel pipe, $F_a = S_n = 16{,}700$ psi at the operating temp., -20° F to 100° F (per Table 1A, part D, Section II, ASME Boiler & Pressure Vessel Code 2004 edition).
Reference drawings: ME-439769, ME-439747, MC-439738, and also as shown from figure 4.1.

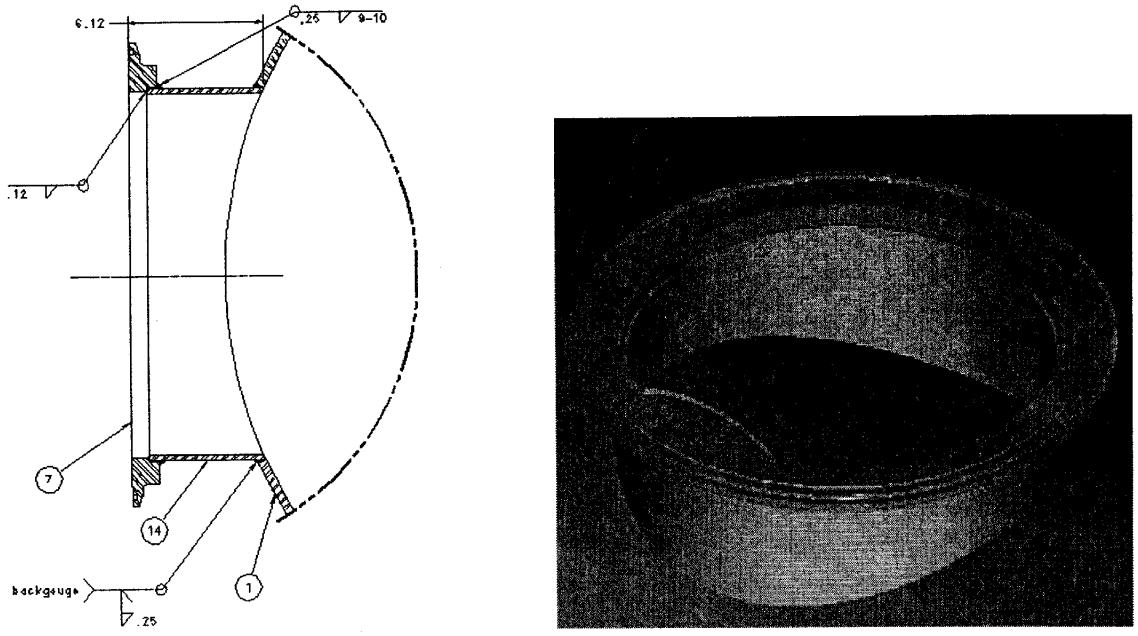

Figure 4.1, 2D details and 3D view of the middle central port opening

Find out the thickness required:

1. Assuming $L_1 = 6.12$ in, $t_{r1} = 0.25$ in, then:

   $L_1/d_o = 6.12/16.00 = 0.3825$
   $d_o/t_{r1} = 16.00/0.25 = 64$

   From Fig. G and Fig. HA-3 of subpart 3 of Sect. II, part D:

   $A = 0.008$
   $B = 12900$
   $P_a = (4B)/(3(d_o/t_{r1})) = (4 \times 12900)/(3 \times 64) = 269$ psi $> P$

2. Try: $L_2 = 6.12$ in, $t_{r2} = 0.0625$ in

   $L_2/d_o = 0.3825$
   $d_o/t_{r2} = 256$

   get:
   $A = 0.00092$
   $B = 8700$
   $P_a = (4B)/(3(d_o/t_{r2})) = (4 \times 8700)/(3 \times 256) = 45.31$ psi $> P$

3. Try: $L_3 = 6.12$ in, $t_{r3} = 0.0345$in

$L_3/d_o = 0.3825$
$d_o/t_{r3} = 16.00/0.0345 = 464$

get:
$A = 0.00037$
$B = 5050$
$P_a = (4B)/(3(d_o/t_{r2})) = (4 \times 5150)/(3 \times 464) = 14.80$ psi $\approx P$
So: $\mathbf{t_{rn} = t_{r3} = 0.0345}$ **in**

Size of the weld required:

Per UG-37, UW-16 and Fig. UW-16.1(c) of ASME VIII, Div.1.
t_{min}: 0.25"
t_c: the throat dimension of the outside reinforcing fillet $\geq 0.7t_{min}$
$= 0.175$ in, **so the fillet leg size is 0.25'**
Full penetration weld (bevel groove with backgouge).
So the sizes of the weld are satisfactory.

Area of the reinforcement required A_r:

Per section UG-37(d)(1):

$A_r = 0.5(dt_rF + 2t_nt_rF(1-f_{r1})$
$= 0.5 \times (15.50" \times 0.165" \times 1.0 + 2 \times 0.25" \times 0.165" \times 1.0 \times 0)$
$= 0.5 \times (2.5575 + 0.0)$ in^2
$=$ **1.2788 in^2**
Where:
d: Finished diameter of circle opening, see Fig. UG-37.1 of UG-37.
D = 15.50 in (per drawing ME-439769)
F: Correction factor
f_r: Strength reduction factor, not greater than 1.0
$f_{r1} = S_n / S_v = 16.7 / 16.7 = 1.0$, for nozzle wall inserted through the vessel wall.
$f_{r2} = S_n / S_v = 16.7 / 16.7 = 1.0$

Area of reinforcement available A_a:

A_1: Larger of the following calculated value: (area available in shell):
$= d(E_1t - Ft_r)-2t_n(E_1t - Ft_r) \times (1-f_{r1})$
$= 15.50" \times (1 \times 0.375" - 1.0 \times 0.165") - 2 \times 0.25 (1 \times 0.375 - 1 \times 0.165) \times (1-1)$
$= (3.255 - 0)$ in^2
$= 3.255$ in^2

or $= 2(t + t_n)(E_1t - Ft_r)-2t_n(E_1t - Ft_r) \times (1-f_{r1})$
$= 2 (0.375" + 0.25") \times (1.0 \times 0.375" - 1.0 \times 0.165") - 2 \times 0.25 (1 \times 0.375 - 1 \times 0.165) \times (1- 1)$

$= (0.2625 - 0)\ in^2$
$= 0.2625\ in^2$
So pick $\mathbf{A_1 = 3.255\ in^2}$

A_2: Smaller of the following:
$= 5\ (t_n - t_{rn}) t f_{r2}$
$= 5 \times (0.25\ in - 0.0345\ in) \times 0.375\ in \times 1.0$
$= 0.404\ in^2$

or $= 5\ (t_n - t_{rn})\ f_{r2} t_n$
$= 5 \times (0.25\ in - 0.0345\ in) \times 1.0 \times 0.25\ in$
$= 0.2694\ in^2$
So pick $\mathbf{A_2 = 0.2694\ in^2}$

A_3: Area available in inward nozzle, use the smallest value:
Since there is no inward nozzle
So pick $\mathbf{A_3 = 0.0\ in^2}$

A_{41}: Outward nozzle weld
$= leg^2\ f_{r2}$
$= 0.25^2\ in^2 \times 0.835$
$\mathbf{= 0.0522\ in^2}$
A_{43}: Inward nozzle weld
$= leg^2\ f_{r2}$
$\mathbf{= 0.0\ in^2}$

Then:
$A_a = A_1 + A_2 + A_3 + A_{41} + A_{43}$
$= (3.255 + 0.2694 + 0 + 0.0522 + 0.0)\ in^2$
$= \mathbf{3.5766\ in^2} > A_r = 1.2788\ in^2$

Per Fig. UG-37.1, section UG-37, the opening is adequately reinforced under the current designated boundary conditions.

4.2 Calculations for the Opening of the MC Port (#11) for the reinforcement and Weld Size

The main vessel shell:

From section 4.1, it is found that t_r = **0.165"**

The #20 port:

d_o: 11.32", outside dia. of the port.
D_i: 10.94", inside dia . of the port.
t_n: 0.187", wall thickness of the port.
t_m: required thickness of the port.
L: length of projection defining the thickness portion of integral reinforcement of the port beyond the outside surface of the vessel wall.
E: 28 x 10^6 psi, modulus of elasticity of the material at the operating temp.
Material: SA 240-304L stainless steel pipe, $F_a = S_n$ = 16,700 psi at the operating temp., -20^0 F to 100^0 F (per Table 1A, part D, Section II, ASME Boiler & Pressure Vessel Code 2004 edition).
Reference drawings: ME-439769-2, MC-439692 and also as shown from figure 4.2.

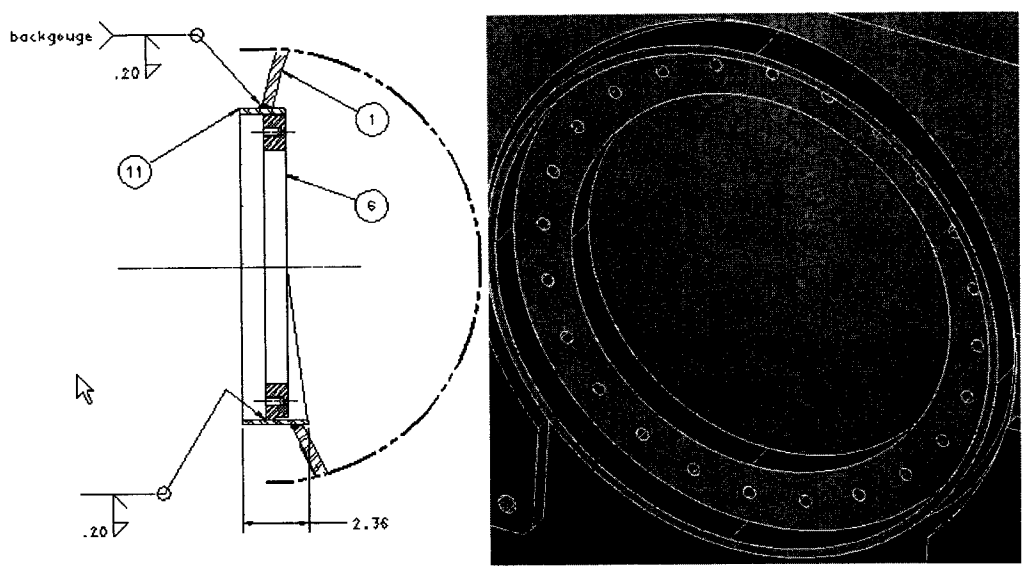

Figure 4.2, The partial 2D and 3D views of the MC port from ME-439769

Find out the wall thickness required:

1. Assuming L_1 = 2.36 in, t_{r1} = 0.0625 in, then:

   L_1/d_o = 2.36/11.32 =0.2085

$d_o/t_{r1} = 11.32/0.0625 = 181$

From Fig. G and Fig. HA-3 of subpart 3 of Sect. II, part D:

$A = 0.0031$
$B = 11000$
$P_a = (4B)/(3(d_o/t_{r1})) = (4 \times 11000)/(3 \times 181) = 81$ psi > P

2. Try: $L_2 = 2.36$ in, $t_{r2} = 0.03125$ in

$L_2/d_o = 0.2085$
$d_o/t_{r2} = 362$

get:
$A = 0.0011$
$B = 8800$
$P_a = (4B)/(3(d_o/t_{r2})) = (4 \times 8800)/(3 \times 362) = 32.4$ psi > P

Try: $L_3 = 2.36$ in, $t_{r3} = 0.0185$ in

$L_2/d_o = 0.2085$
$d_o/t_{r3} = 612$

get:
$A = 0.00045$
$B = 6750$
$P_a = (4B)/(3(d_o/t_{r2})) = (4 \times 6750)/(3 \times 612) = 14.71$ psi $\approx$ P

So: $\mathbf{t_{rn} = t_{r3} = 0.0185in}$

Size of the weld required:

Per UG-37, UW-16 and Fig. UW-16.1© of ASME VIII, Div.1.
t_{min}: 0.187"
t_c: $\geq 0.7t_{min} = 0.131$", **so the fillet leg size is 0.19"** for the reinforcement.
Full penetration weld (bevel groove w/backgouge) plus the fillet weld t_c.

Area of the reinforcement required A_r:

Per section UG-37(d)(1):

$A_r = 0.5(dt_rF + 2t_nt_rF(1-f_{r1})$
$= 0.5 \times (11.32" \times 0.165" \times 1.0 + 2 \times 0.197" \times 0.165" \times 1.0 \times 0)$
$= 0.5 \times (1.8678 + 0.0)$
$= \mathbf{0.9339\ in^2}$
Where:

d: Finished diameter of circle opening, see Fig. UG-37.1 of UG-37.
D = 11.32 in (per drawing MC-439692)
F: Correction factor
f_r: Strength reduction factor, not greater than 1.0
$f_{r1} = S_n / S_v$ for nozzle wall inserted through the vessel wall
$f_{r2} = S_n / S_v = 16.7 / 16.7 = 1.0$

Area of reinforcement available A_a:

A_1: Larger of the following calculated value: (area available in shell):
$= d(E_1t - Ft_r) - 2t_n(E_1t - Ft_r) \times (1-f_{r1})$
$= 11.32" \times (1 \times 0.375" - 1.0 \times 0.165") - 2 \times 0.187 (1.0 \times 0.375 - 1.0 \times 0.165) \times (1-1)$
$= (2.3772 - 0.0)\ in^2$
$= 2.3772\ in^2$

or $= 2(t + t_n)(E_1t - Ft_r) - 2t_n(E_1t - Ft_r) \times (1-f_{r1})$
$= 2\ (0.375" + 0.165") \times (1.0 \times 0.375" - 1.0 \times 0.165") - 2 \times 0.187 (1.0 \times 0.375 - 1.0 \times 0.165) \times (1-1)$
$= (0.2268 - 0.0)\ in^2$
$= 0.2268\ in^2$
So pick $\mathbf{A_1 = 2.3722\ in^2}$

A_2: Smaller of the following:
$= 5\ (t_n - t_{rn}) t f_{r2}$
$= 5 \times (0.187\ in - 0.0185\ in) \times 0.375\ in \times 1.0$
$= 0.3159\ in^2$

or $= 5\ (t_n - t_{rn})\ f_{r2} t_n$
$= 5 \times (0.187\ in - 0.0185\ in) \times 1.0 \times 0.187\ in$
$= 0.1575\ in^2$
So pick $\mathbf{A_2 = 0.1575\ in^2}$

A_3: Area available in inward nozzle, use the smallest value:
Since there is no inward nozzle
So pick $\mathbf{A_3 = 0.0\ in^2}$

A_{41}: Outward nozzle weld
$= leg^2\ f_{r2}$
$= 0.19^2\ in^2 \times 1.0$
$\mathbf{= 0.0361\ in^2}$

A_{43}: Inward nozzle weld
$= leg^2\ f_{r2}$
$= 0.0^2\ in^2 \times 1.0$
$\mathbf{= 0.0\ in^2}$

Then:

$A_a = A_1 + A_2 + A_3 + A_{41} + A_{43}$

$= (2.3722 + 0.1575 + 0 + 0.0361 + 0.0)\ in^2$

$= \mathbf{2.5658\ in^2} > A_r = 0.9339\ in^2$

Per Fig. UG-37.1, section UG-37, the opening is adequately reinforced under the current designated boundary conditions.

4.3 Calculations for the Opening of Port #20 for the Reinforcement and Weld Size

The main vessel shell:

From section 4.1, it is found that $\mathbf{t_r = 0.165"}$

The port #20:

d_o: 12.00", outside dia. of the port.
d_i: 11.50", inside dia . of the port.
t_n: 0.25", wall thickness of the port.
t_{rn}: required thickness of the port.
L: length of projection defining the thickness portion of integral reinforcement of the port beyond the outside surface of the vessel wall.
E: 28 x 10^6 psi, modulus of elasticity of the material at the opening temp.
Material: SA 240-304L stainless steel pipe, $F_a = S_n = 16{,}700$ psi at the operating temp., -20^0 F to 100^0 F (per Table 1A, part D, Section II, ASME Boiler & Pressure Vessel Code 2004 edition).
Reference drawings: section D-D, ME-439769-2, and also as shown in figure 4.3.

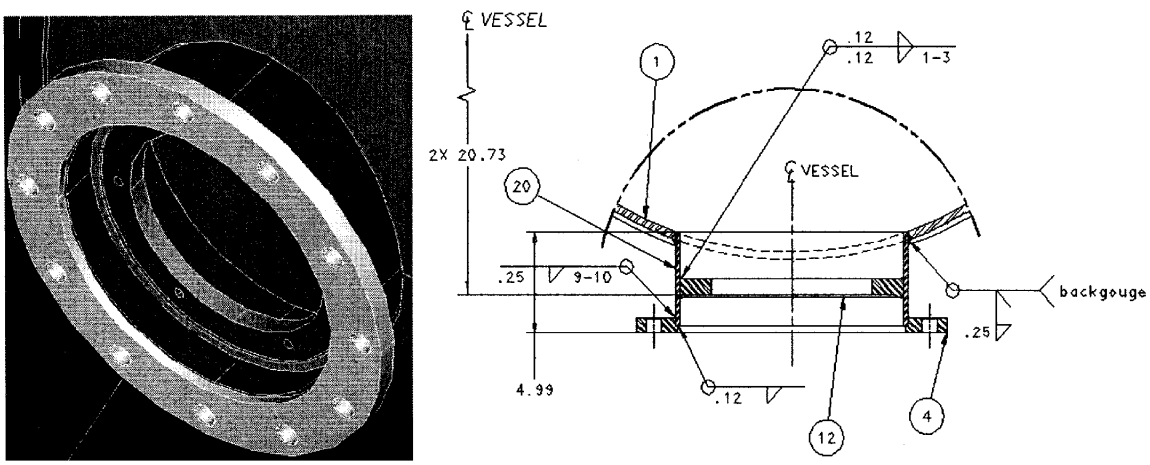

Figure 4.3, The partial 2D and 3D views of port #20

Find out the wall thickness requires:

Assuming $L_1 = 4.99$ in, $t_{r1} = 0.0625$ in,
then:

$L_1/d_o = 4.99/12.0 = 0.4158$
$d_o/t_{r1} = 12.0/0.0625 = 192$

From Fig. G and Fig. HA-3 of subpart 3 of Sect. II, part D:
get:

$A = 0.00135$
$B = 9300$

$P_a = (4B) / 3(d_o/t_{r1}) = (4 \times 9300) / (3 \times 192) = 64.58$ psi > P

Try: $L_2 = 4.99$ in, $t_{r2} = 0.03125$ in

$L_2/d_o = 0.4128$
$d_o/t_{r2} = 384$

get:
$A = 0.00047$
$B = 6500$
$P_a = (4B)/(3(d_o/t_{r2})) = (4 \times 6500)/(3 \times 384) = 22.57$ psi > P

Try: $L_3 = 4.99$ in, $t_{r3} = 0.0265$ in

$L_3/d_o = 0.4128$
$d_o/t_{r3} = 453$

get:
$A = 0.00035$
$B = 5000$
$P_a = (4B)/(3(d_o/t_{r3})) = (4 \times 5000)/(3 \times 453) = 14.72$ psi $\approx$ P

So: $\mathbf{t_{rn} = t_{r3} = 0.032}$ **in**

Size of the weld required:

Per UG-37, UW-16 and Fig. UW-16.1(c) of ASME VIII, Div.1.
t_{min}: 0.25"
t_c: $\geq 0.7t_{min} = 0.175$", **so the fillet leg size is 0.25"**
Full penetration weld (bevel groove with backgouge) plus the fillet weld t_c.

Area of the reinforcement required A_r:

Per section UG-37(d)(1):

$A_r = 0.5(dt_rF + 2t_nt_rF(1-f_{r1})$
$= 0.5 \times (11.50" \times 0.165" \times 1.0 + 2 \times 0.25" \times 0.165" \times 1.0 \times 0.0)$
$= 0.5 \times (1.8975 + 0.0)$

$= \mathbf{0.9488\ in^2}$

Where:

d: Finished diameter of circle opening, see Fig. UG-37.1 of UG-37.

d = 11.50 in (per drawing ME-439262)

F: Correction factor

f_r: Strength reduction factor, not greater than 1.0

$f_{r1} = S_n / S_v$ for nozzle wall inserted through the vessel wall

$f_{r2} = S_n / S_v = 16.7 / 16.7 = 1.0$

Area of reinforcement available A_a:

A_1: Larger of the following calculated value: (area available in shell):

$= d(E_1t - Ft_r) - 2t_n(E_1t - Ft_r) \times (1 - f_{r1})$

$= 11.5" \times (1 \times 0.375" - 1.0 \times 0.165") - 2 \times 0.25\ (1.0 \times 0.375 - 1.0 \times 0.165) \times 0.0$

$= (2.415 - 0.0)\ in^2$

$= 2.415\ in^2$

or $= 2(t + t_n)(E_1t - Ft_r) - 2t_n(E_1t - Ft_r) \times (1 - f_{r1})$

$= 2\ (0.375" + 0.25") \times (1.0 \times 0.375" - 1.0 \times 0.165") - 2 \times 0.25\ (1.0 \times 0.375 - 1.0 \times 0.165) \times 0.0$

$= (0.2625 - 0.0)\ in^2$

$= 0.2625\ in^2$

So pick $\mathbf{A_1 = 2.415\ in^2}$

Since $A_1 = 2.415\ in^2$

Also: $A_a = A_1 + A_2 + A_3 + A_{41} + A_{43}$

That leads to:

$A_a > A_r = 0.9488\ in^2$

Per Fig. UG-37.1, section UG-37, the opening is adequately reinforced under the current designated boundary conditions.

The analysis and conclusion should be true for all 2 ports (#20 openings, see view L-L, drawing ME-439769-2).

4.4 Calculations for the Opening of Port #15 for the Reinforcement and Weld Size

The main vessel shell:

From section 4.1, it is found that $\mathbf{t_r = 0.165"}$

The port #15:

d_o: 4.00", outside dia. of the port.
d_i: 3.76", inside dia . of the port.
t_n: 0.12", wall thickness of the port.
t_{rn}: required thickness of the port.
L: length of projection defining the thickness portion of integral reinforcement of the port beyond the outside surface of the vessel wall.
E: 28×10^6 psi, modulus of elasticity of the material at the opening temp.
Material: SA 249-TP304 stainless steel tube, $F_a = S_n = 17{,}000$ psi at the operating temp., -20^0 F to 100^0 F (per Table 1A, part D, Section II, ASME Boiler & Pressure Vessel Code 2004 edition).
Reference drawings: Detail H of drawing ME-439769-1, drawing MC- 439739 and also as shown in figure 4.4.

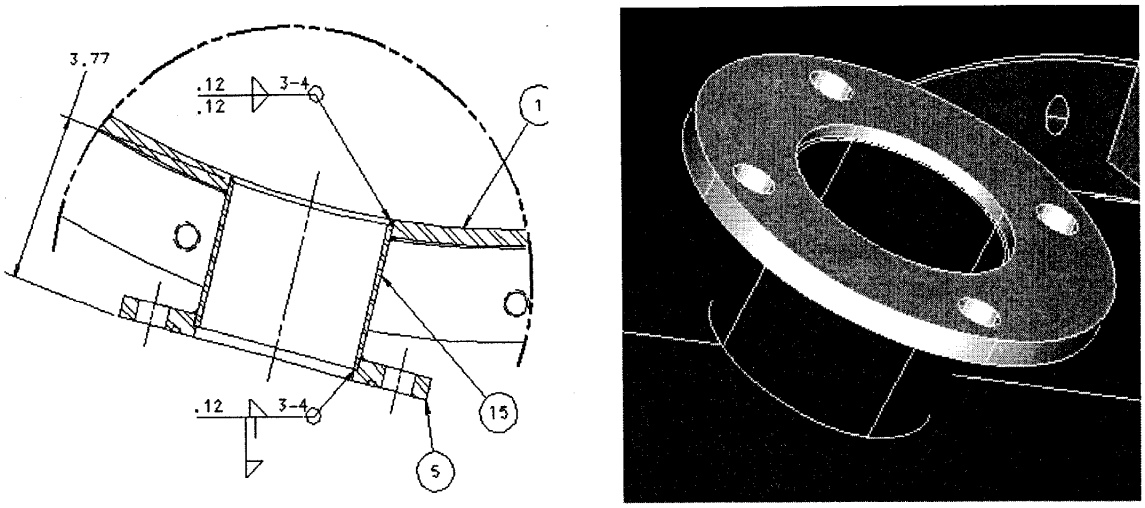

Figure 4.4, The partial 2D and 3D views of the port #15.

Find out the wall thickness required of the port #15:

Per detail H of ME-439769-1 and figure 4.4, it is found that the nozzle port #15 only insert about 0.25" into the vessel shell, to that end, it is reasonable to redefine that:
t = 0.25" for the calculation related to port #15.

Assuming $L_1 = 3.77$ in, $t_{r1} = 0.0625$ in,
then:

$L_1/d_o = 3.77/4.0 = 0.9425$
$d_o/t_{r1} = 4.0 / 0.0625 = 64$

From Fig. G and Fig. HA-3 of subpart 3 of Sect. II, part D:
get:

$A = 0.0028$
$B = 10800$

$P_a = (4B) / 3(d_o/t_{r1}) = (4 \times 10800) / (3 \times 64) = 225$ psi $> P$

Try: $L_2 = 4.99$ in, $t_{r2} = 0.0125$ in

$L_2/d_o = 0.9425$
$d_o/t_{r2} = 320$

get:
$A = 0.00026$
$B = 3650$
$P_a = (4B)/(3(d_o/t_{r2})) = (4 \times 3650)/(3 \times 320) = 15.20$ psi $\approx P$

So: $\mathbf{t_{rn} = t_{r2} = 0.0125}$ **in**

Size of the weld required:

Per UG-37, UW-16 (d1) and Fig. UW-16.1(k) of ASME VIII, Div.1.
t_o: the throat dimension of the outer attachment weld, $\geq 0.7\ t_{min}$.
t_i: the throat dimension of the inside of the shell cutout, $\geq 0.7 t_{min}$
$t_o = 0.7\ t_{min} = 0.5 \times 0.12" = 0.084"$, **so the fillet leg size is 0.12"**
$t_i = 0.7\ t_{min} = 0.7 \times 0.12" = 0.084"$, **so the fillet leg size is 0.12"**
$t_o + t_i = 0.084" + 0.084" = 0.168" > 1\ ¼\ t_{min} = 0.15"$
(See details H of dwg. ME-439769-1 as the references)
So the sizes of the weld are satisfactory

Area of the reinforcement required A_r:

Per section UG-37(d)(1):

$A_r = 0.5(dt_rF + 2t_nt_rF(1-f_{r1})$
$= 0.5 \times (3.76" \times 0.165" \times 1.0 + 2 \times 0.25" \times 0.165" \times 1.0 \times 0.0)$
$= 0.5 \times (0.6204 + 0.0)$
$=$ **0.3102 in^2**

Where:

d: Finished diameter of circle opening, see Fig. UG-37.1 of UG-37.
$d = 3.76$ in (per drawing MC - 439739)

F: Correction factor

f_r: Strength reduction factor, not greater than 1.0
$f_{r1} = S_n / S_v$ for nozzle wall inserted through the vessel wall
$f_{r2} = S_n / S_v = 17.0 / 16.7 = 1.0$

Area of reinforcement available A_a:

A_1: Larger of the following calculated value: (area available in shell):

$= d(E_1t - Ft_r) - 2t_n(E_1t - Ft_r) \times (1 - f_{r1})$
$= 3.76" \times (1 \times 0.25" - 1.0 \times 0.165") - 2 \times 0.25\ (1.0 \times 0.25 - 1.0 \times 0.165) \times 0.0$
$= (0.3196 - 0.0)\ in^2$
$= 0.3196\ in^2$

or $= 2(t + t_n)(E_1t - Ft_r) - 2t_n(E_1t - Ft_r) \times (1 - f_{r1})$
$= 2\ (0.25" + 0.12") \times (1.0 \times 0.25" - 1.0 \times 0.165") - 2 \times 0.25\ (1.0 \times 0.25 - 1.0 \times 0.165) \times 0.0$
$= (0.0629 - 0.0)\ in^2$
$= 0.0629\ in^2$

So pick $\mathbf{A_1 = 0.3196\ in^2}$

Since $A_1 = 0.3196\ in^2$
Also: $A_a = A_1 + A_2 + A_3 + A_{41} + A_{43}$

That leads to:
$A_a > A_r = 0.3102\ in^2$

Per Fig. UG-37.1, section UG-37, the opening is adequately reinforced under the current designated boundary conditions.

The analysis and conclusion should be true for all 6 ports.

4.5 Calculations for the Opening of Port #17 for the Reinforcement and Weld Size

The main vessel shell:

From section 4.1, it is found that $\mathbf{t_r = 0.165"}$

The port #15:

d_o: 2.88", outside dia. of the port.
d_i: 2.64", inside dia . of the port.
t_n: 0.12", wall thickness of the port.
t_{rn}: required thickness of the port.
L: length of projection defining the thickness portion of integral reinforcement of the port beyond the outside surface of the vessel wall.
E: 28 x 10^6 psi, modulus of elasticity of the material at the opening temp.
Material: SA 249-TP304 stainless steel tube, $F_a = S_n = 17{,}000$ psi at the operating temp., -20^0 F to 100^0 F (per Table 1A, part D, Section II, ASME Boiler & Pressure Vessel Code 2004 edition).
Reference drawings: Detail H of drawing ME-439769-1, drawing MC- 439702 and also as shown in figure 4.5.

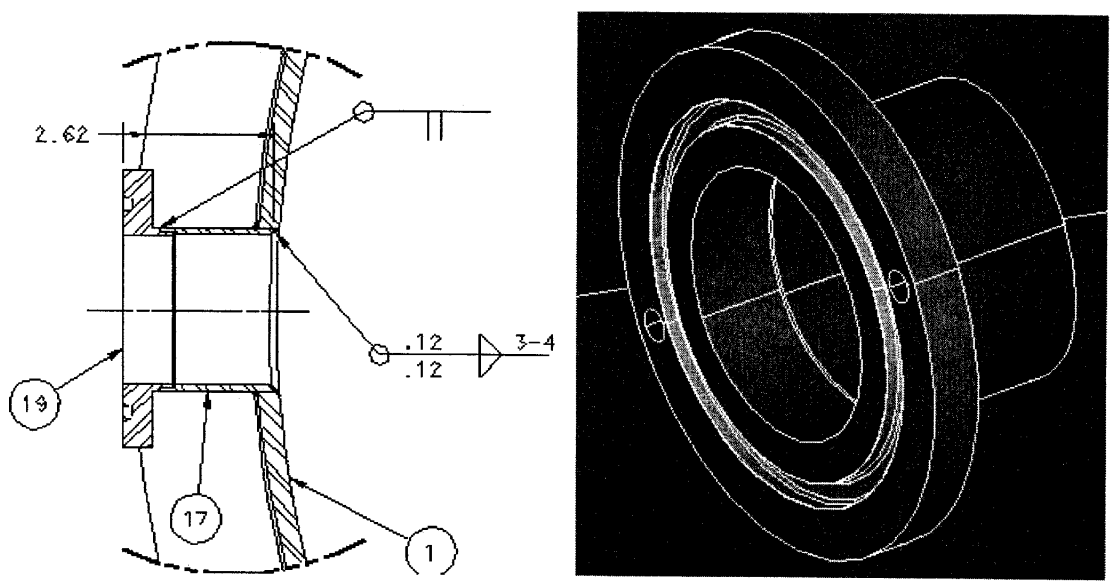

Figure 4.5, The partial views of 2D and 3D of port #17.

Find out the wall thickness required of the port #15:

Per detail H of ME-439769-1 and figure 4.5, it is found that the nozzle port #17 only insert about 0.25" into the vessel shell, to that end, it is reasonable to redefine that:
$t = 0.25"$ for the calculation related to port #17.

Assuming $L_1 = 2.62$ in, $t_{r1} = 0.03125$ in,
then:

$L_1/d_o = 2.62/2.88 = 0.9097$
$d_o/t_{r1} = 2.62 / 0.03125 = 84$

From Fig. G and Fig. HA-3 of subpart 3 of Sect. II, part D:
get:

$A = 0.00195$
$B = 10000$

$P_a = (4B) / 3(d_o/t_{r1}) = (4 \times 10000) / (3 \times 84) = 158.7$ psi $> P$

Try: $L_2 = 2.62$ in, $t_{r2} = 0.0125$ in

$L_2/d_o = 0.9097$
$d_o/t_{r2} = 210$

get:
$A = 0.00051$
$B = 7150$
$P_a = (4B)/(3(d_o/t_{r2})) = (4 \times 7150)/(3 \times 210) = 45.4$ psi $> P$

Try: $L_2 = 2.62$ in, $t_{r2} = 0.0082$ in

$L_2/d_o = 0.9097$
$d_o/t_{r2} = 319.5$

get:
$A = 0.000265$
$B = 3700$
$P_a = (4B)/(3(d_o/t_{r2})) = (4 \times 3700)/(3 \times 319.5) = 15.44$ psi $\approx P$

So: $\mathbf{t_{rn} = t_{r2} = 0.0082}$ **in**

Size of the weld required:

Per UG-37, UW-16 (d1) and Fig. UW-16.1(k) of ASME VIII, Div.1.
t_o: the throat dimension of the outer attachment weld, $\geq 0.7\ t_{min}$.
t_i: the throat dimension of the inside of the shell cutout, $\geq 0.7 t_{min}$

$t_o = 0.7\ t_{min} = 0.5 \times 0.12" = 0.084"$, **so the fillet leg size is 0.12"**
$t_i = 0.7\ t_{min} = 0.7 \times 0.12" = 0.084"$, **so the fillet leg size is 0.12"**
$t_o + t_i = 0.084" + 0.084" = 0.168" > 1\ ¼\ t_{min} = 0.15"$
(See details G of dwg. ME-439769-1 as the references)
So the sizes of the weld are satisfactory

Area of the reinforcement required A_r:

Per section UG-37(d)(1):

$A_r = 0.5(dt_rF + 2t_nt_rF(1-f_{r1})$
$= 0.5 \times (2.64" \times 0.165" \times 1.0 + 2 \times 0.25" \times 0.165" \times 1.0 \times 0.0)$
$= 0.5 \times (0.4356 + 0.0)$
$=$ **0.2178 in^2**

Where:
d: Finished diameter of circle opening, see Fig. UG-37.1 of UG-37.
d = 2.64 in (per drawing MC-439702)
F: Correction factor
f_r: Strength reduction factor, not greater than 1.0
$f_{r1} = S_n / S_v$ for nozzle wall inserted through the vessel wall
$f_{r2} = S_n / S_v = 17.0 / 16.7 = 1.0$

Area of reinforcement available A_a:

A_1: Larger of the following calculated value: (area available in shell):
$= d(E_1t - Ft_r) - 2t_n(E_1t - Ft_r) \times (1-f_{r1})$
$= 2.64" \times (1 \times 0.25" - 1.0 \times 0.165") - 2 \times 0.25\ (1.0 \times 0.25 - 1.0 \times 0.165) \times 0.0$
$= (0.2244 - 0.0)$ in^2
$= 0.2244$ in^2

or $= 2(t + t_n)(E_1t - Ft_r) - 2t_n(E_1t - Ft_r) \times (1-f_{r1})$
$= 2\ (0.25" + 0.12") \times (1.0 \times 0.25" - 1.0 \times 0.165") - 2 \times 0.25\ (1.0 \times 0.25 - 1.0 \times 0.165) \times 0.0$
$= (0.0629 - 0.0)$ in^2
$= 0.0629$ in^2

So pick **A_1 = 0.2244 in^2**

Since $A_1 = 0.2244$ in^2
Also: $A_a = A_1 + A_2 + A_3 + A_{41} + A_{43}$

That leads to:
$A_a > A_r = 0.2178$ in^2

Per Fig. UG-37.1, section UG-37, the opening is adequately reinforced under the current designated boundary conditions.

4.6 The Discussions of the Multiple Openings

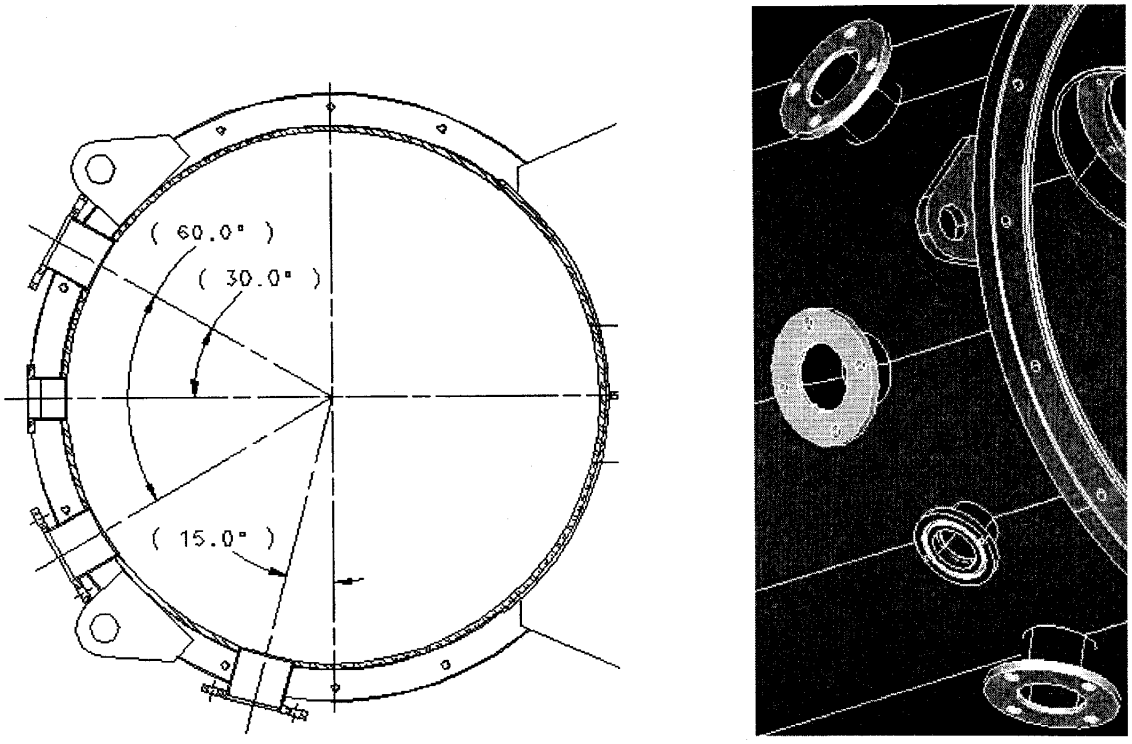

Figure 4.6, 2D and 3D views of multiple openings (between ports #15 and port #17)

Per figure 4.6 and section A-A of drawing ME-439769-1, it is found that the shortest distance between port # 15 and #17 is:

$d_m = (d_0 \times \pi \times 30^o) / 360^o = (38 \text{ in} \times \pi \times 30^0) / 360^o$

$= 9.948 \text{ in} > 2 \times [(2.88 + 4.00) / 2] \text{ in} = 6.88 \text{ in}$

i.e: Two openings are spaced at larger than two times their average diameter.

Per section UG-42(a) of ASME VIII, Div.1, no additional reinforcement for the multiple openings is necessary under current design configuration.

5. Analysis and Calculations for the Flanges, the Bolts and Welds

5.1 Front End Flange and the Front Vessel Head

References: ME-439769-2, MC-439725, MD-439819
MD-439871, and Figure 5.1

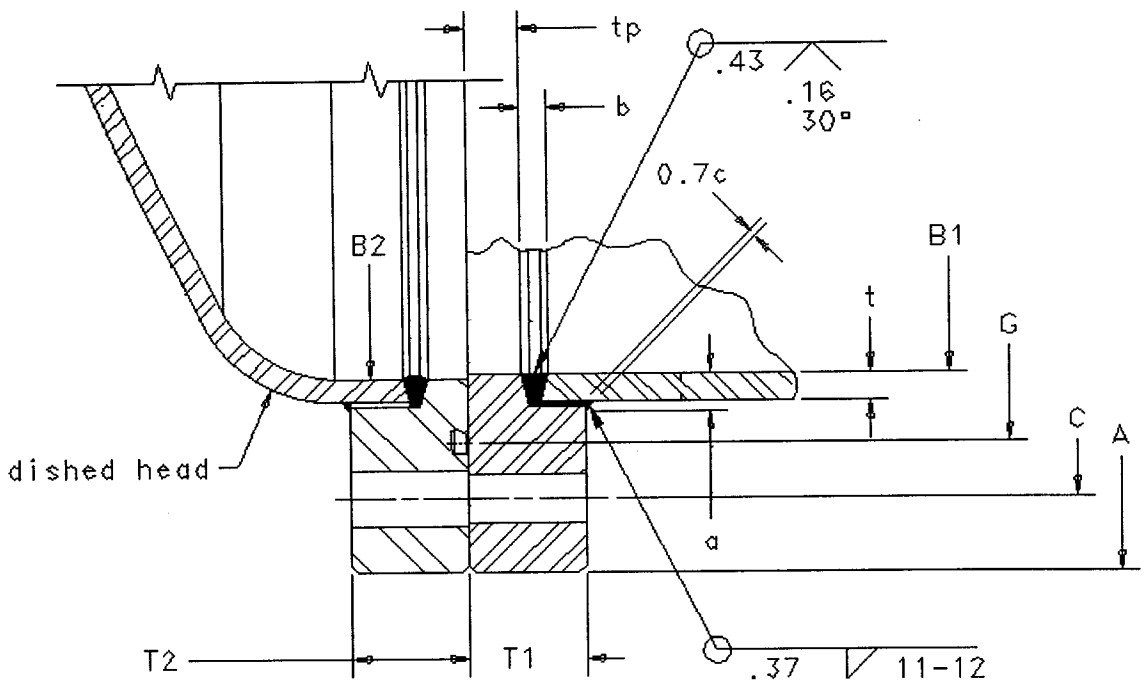

Figure 5.1 End flange of the vessel with the front vessel head.

Figure 5.1 is the assembly configuration of the end flange of the vessel connecting with the horizontal cryostat front vessel head.

It was found that:

$A = 42.52$" (dia.)
$B_1 = 37.25$" (dia.)
$B_2 = 37.38" \rightarrow 0"$ (dia.) (dished head)
$C = 40.551$" (dia.)
$G = 39.115$" (dia.)
$T_1 = 1.575$"
$T_2 = 1.575$"
$P = 14.7$ psi
$n = 16$
$E_1 = E_2 = 2.8 \times 10^7$ psi

Material: SA 182-F304L stainless steel, $F_a = S_f = 16{,}700$ psi at the operating temp., -20^0 F to 100^0 F (per Table 1A, part D, Section II, ASME Boiler & Pressure Vessel Code 2005 edition).

assuming bolt spec: 5/8 - 11 UNC

$A_b = 16 \times 0.2018 \text{ in}^2 = 3.2288 \text{ in}^2$

The cross-sectional area of the bolts using the root dia. (0.5069") of the thread in sq. in.

Per section Y-5.1, Y-5.2, figure Y-5.1.3 of Appendix Y,
Section 2-4, figure 2-4 of Appendix 2 of ASME VIII:

It is defined as: Class 3, Category 3 flange

Flange Analysis:

For the rigid body rotation of the flange times E*:

$$E_1 * \theta_{rbi} = X(C_4 - C_2) \div (1.206 \log(A/B_1) - XC_3 - (1 - X)C_1)$$

where:

$$C_1 = -(0.748 - 1.567\, J_s \log(A/B_1)) \div (1 + 1.3 J_s)$$

Where:

$$J_s = (1/B_1)\,[2h_D/\beta + h_C/\alpha] + \pi\, r_B$$

$h_D = (C - B) / 2$
$= (40.551 - 37.25) / 2$ in
$= 1.6505$ in

$h_C = (A - C) / 2$
$= (42.52 - 40.551) / 2$ in
$= 0.9845$ in

$\beta = (C + B) / 2B$
$= (40.551 + 37.25) / (2 \times 37.25)$
$= 1.0443$

$\alpha = (A + C) / 2B$
$= (42.52 + 40.551) / (2 \times 37.25)$
$= 1.115$

$$r_B = (1/n)[4/(1 - (\overline{AR})^2)^{1/2} \tan^{-1}((1 + \overline{AR})/(1 - \overline{AR}))^{1/2} - \pi - 2\overline{AR}]$$

where:

$\overline{AR} = nD / \pi C$
$= (16 \times 0.719") / \pi\, 40.551"$
$= 0.0903$

D: the bolt hole diameter

$r_B = (1/16)[4/(1-(0.0903)^2)^{1/2} \tan^{-1}((1+0.0903)/(1-0.0903))^{1/2} - \pi - 2 \times 0.0903]$
$= 0.0625 \times (4.0164 \times 0.8306 - \pi - 0.1806)$
$= 0.000864$

$J_s = (1/37.25") [2 \times 1.6505/1.0443 + 0.9845/1.115] + \pi \times 0.000864$
$= 0.0268 \times (3.161 + 0.883) + 0.0027$
$= 0.1111$

$C_1 = -(0.748 - 1.567 \times 0.1111 \times \log(42.52/37.24)) \div (1 + 1.3 \times 0.1111)$
$= -(0.748 - 0.01) / 1.14443$
$= -0.6449$

$C_2 = [\pi/32 (PB_1^3) - 1.3 J_p M_p] \div (1 + 1.3J_s)$

Where:
$J_p = (1/B_1) [h_D/\beta + h_C/\alpha] + \pi r_B$
$= (1/37.25") [1.6505/1.0443 + 0.9845/1.115] + \pi \times 0.000864$
$= 0.0268 \times (1.5805 + 0.883) + 0.0027$
$= 0.0687$

$M_p = H_D h_D + H_T h_T + H_G h_G$ (per sectionY-3, Appendix Y, ASME VIII)

$H_D = 0.785 B_1^2 P$
$= 0.785 \times 37.25^2 \text{ in}^2 \times 14.7 \text{ psi}$
$= 16{,}012$ lbs.

$H = 0.785G^2P$
$= 0.785 \times 39.115^2 \text{ in}^2 \times 14.7 \text{ psi}$
$= 17{,}655$ lbs.

$H_T = H - H_D$
$= 17{,}655 - 16{,}012$
$= 1{,}643$ lbs.

$h_G = (C - G)/2$
$= (40.551 - 39.115) \text{ in} / 2$
$= 0.718$ in

$h_D = 1.6505$ in

$h_T = (h_D + h_G) / 2$
$= 1.1843$ in

$H_G = W - H$, gasket load
(per section 2-3, appendix 2, ASME VIII)

$W = H + H_p$,
flange design load for the operating condition
(per section 2-5(c)(1), appendix 2, ASME VIII)

which leads to:

$$H_G = W - H$$
$$= H + H_p - H$$
$$= H_p$$
$$= 2b \times 3.14GmP$$
$$= 2 \times 0.255 \text{ in} \times 3.14 \times 39.115 \text{ in} \times 3.5 \times 14.7 \text{ psi}$$
$$= 3{,}223 \text{ lbs.}$$

$$M_p = H_D h_D + H_T h_T + H_G h_G$$
$$= (16{,}012 \times 1.6505 + 1{,}643 \times 1.1843 + 3{,}223 \times 0.718) \text{ lbs-in}$$
$$= (26{,}428 + 1{,}946 + 2{,}314) \text{ lbs-in}$$
$$= 30{,}688 \text{ lbs-in}$$

$$C_2 = (0.0982 \times 14.7 \text{ psi} \times 51{,}687 \text{ in}^3 - 1.3 \times 0.0687 \times 30{,}688 \text{ lbs-in}) \div 1.1443$$
$$= (74{,}612 - 2{,}741) / 1.1443$$
$$= 62{,}808 \text{ lbs-in}$$

$$C_3 = -(0.575 - 1.206\, Js \log(A/B_1)) \div (Js + t_1^3/F_1')$$
$$= 0$$

$$C4 = -(J_p M_p) \div (Js + t_1^3/F_1')$$
$$= 0$$
$$\because F_1' = 0 \text{ (per section Y-3(6c), Appendix Y, ASME VIII, Div.1)}$$

$$X = E_1^* / (E_1^* + E_2^*)$$
$$E_1^* = E_1 t_1^3$$
$$E_2^* = E_2 t_2^3$$
$$\because E_1 = E_2$$
$$\therefore X = E_1 t_1^3 / (E_1 t_1^3 + E_2 t_2^3)$$
$$= t_1^3 / (t_1^3 + t_2^3)$$
$$= 3.907 / (3.907 + 3.907)$$
$$= 0.50$$

$$E_1^* \theta_{rbi} = 0.50(0 - 62{,}808) \div [(1.206 \times 0.0575) - (0.50 \times 0.0) - (1 - 0.50) \times -0.06449)]$$
$$= 0.50 \times (-62{,}808) \text{ lbs-in} \div (0.0693 - 0.0 + 0.0322)$$
$$= -31{,}404 \text{ lbs-in} \div 0.1015$$
$$= -309{,}399 \text{ lbs-in}$$

$$E_2^* \theta_{rbii} = -E_1^* \theta_{rbi} (E_2^* / (E_1^*)$$
$$= -(-309{,}399 \times 1.0) \text{ lbs-in}$$
$$= 309{,}399 \text{ lbs-in}$$

Total Flange Moment at Diameter B_1:

$M_{s1} = C_3 (E_1 * \theta_{rbi}) + C_4$
$= 0.0$

$M_{s2} = C_1 (E_2 * \theta_{rbii}) + C_2$
$= - 0.06449 \times 309{,}399$ lbs-in + 62,808 lbs-in
$= 42{,}855$ lbs-in $\rightarrow 0$ *

*: Since it is category 3 flange, per section Y-4 of Appendix Y, ASME VIII, Div 1, $M_{si} = 0$

Unbalanced Flange Moment at Diameter B_1:

$M_{u1} = 1.206 (E_1 * \theta_{rbi}) \log(A/B_1)$
$= 1.206 \times (-309{,}399$ lbs-in) x 0.0575
$= -21{,}455$ lbs-in

$M_{u2} = 1.206 (E_2 * \theta_{rbii}) \log(A/B_1)$
$= 1.206 \times 309{,}507$ lbs-in) x 0.0575
$= 21{,}455$ lbs-in

Balanced Flange Moment at Diameter B_1:

$M_{b1} = M_{s1} - M_{u1}$
$= 0.0$ lbs-in - (-21,455 lbs-in)
$= 21{,}455$ lbs-in

$M_{b2} = M_{s2} - M_{u2}$
$= 0$ lbs-in – 21,455 lbs-in
$= - 21{,}455$ lbs-in

Slope of Flange at Diameter B_1 times E:

$E_1 \theta_{Bi} = (5.46/(\pi t_1^3)) (J_s M_{b1} + J_p M_p) + E_1 * \theta_{rbi} / t_1^3$
$= 0.4448$ in^{-3} x (0.1111 x (21,455 lbs-in) + 0.0687 x 30,688 lbs-in) - 309,399 lbs-in / 3.907 in^3)
$= (1{,}998 - 79{,}191)$ psi
$= -77{,}193$ psi

$E_2 \theta_{Bii} = -1.337 (M_{sII} - \pi P B_1^3/32) / t_2^3$
$= -1.337 \times (0 - (\pi 14.7$ psi x 37.25^3 in^3)/32) / 3.907] psi
$= (99{,}730 / 3.907)$ psi
$= 25{,}526$ psi

Contact Force between Flange at h_c:

$H_{ci} = (M_{pi} + M_{b1}) / h_c$
$= (30{,}688 + 21{,}455)$ lbs-in / 0.9845 in
$= 52{,}964$ lbs.

However,

$M_{pi} = H_D h_D + H_T h_T + H_G h_G$

is the moment under the internal pressure, for the external pressure,

$M_{pe} = H_D(h_D - h_G) + H_T(h_T - h_G) + H_G(h_G - h_G)$

$= (16{,}012 \times (1.6505 - 0.718) + 1{,}643 \times (1.1843 - 0.718) + 0)$ lbs-in

$= (14{,}931 + 766)$ lbs-in

$= 15{,}697$ lbs-in

That leads to:

$H_{ci} = (M_{pe} + M_{b1}) / h_c$

$= (15{,}697 + 21{,}455)$ lbs-in / 0.9845 in

$= 37{,}737$ lbs.

Bolt Load at Operating Conditions:

$W_{m1} = H + H_G + H_C$

$= (17{,}655 + 3{,}223 + 37{,}737)$ lbs

$= 58{,}615$ lbs.

Operating Bolt Stress f_b:

$f_b = W_{m1} / A_{b1}$

$= 58{,}615$ lbs / 3.2288 in^2

$=$ <u>18,154 psi</u> $< S_b = 22.2$ ksi for SA 193-S316 for $t \leq$ ¾" (per Table 3, part D, ASME VIII, Div. II, 2004 edition)

Design Pre-stress in Bolts:

$S_i = f_b - 1.159\, h_c^2 (M_p + M_{b1}) / (2(1 - X) a\, t_1^3\, l\, r_{e1} B_1)$

where:

r_{e1}: ≈ 1.0, elasticity factor, the ratio between E_{flange} and E_{bolt}

$a = (A + C) / 2B_1$

$= (42.52 + 40.551)$ in / 2 x 37.25 in

$= 1.115$ (shape factor)

l: $= t_1 + t_2 + 0.5 d_b$ (calculated strain length of the bolt)

$= (1.575 + 1.575 + 0.3125)$ in

$= 3.4625$ in

$S_i = 18{,}154$ psi $- 1.159 \times 0.9845^2$ in^2 x $(15{,}697 + 21{,}455)$lbs-in / $(2(1 - 0.50) \times 1.115 \times 1.575^3$ in^3 x 3.4625 in x 1.0 x 37.25 in)

$= 18{,}154$ psi $- 41{,}735$ lbs-in^3 / 562 in^5

$= 18{,}080$ psi

Redial Stress in Flange I @ Bolt Circle:

$S_{R1} = 6(M_p + M_{S1}) / t_1^2(\pi C - nD)$
$= 6 \times (15{,}697 - 0)$ lbs-in / 1.575^2 in^2 x (π 40.551 in – 24 x 0.719 in)
$= 94{,}182$ lbs-in / 273 in^3
$= 345$ psi $< S_n = 16{,}700$ psi

Radial Stress in Flange at Inside Diameter:

$S_{R1} = 0$

Tangential Stress in Flange I @ Inside Diameter:

$S_{t1} = t_1 E_1 \theta_{Bi} / B_1$
$= 1.575$ in x -77,193 psi / 37.25 in
$= -3{,}264$ psi $< S_n = 16{,}700$ psi

Longitudinal Hub Stress in Flange 1:

$S_{h1} = 0$
(per equation (34c), section Y-6.3, appendix Y, ASME VIII, Div.1)

Radial Stress in Flange 2 @ bolt circle:

$S_{r2b} = 6(M_p + M_{sII}) / (t_{II}^2 (\pi C - nD))$
$= 6 \times (15{,}697 + 0)$ lbs-in / (1.575^2in^2 x (π 40.551 in – 24 x 0.719 in))
$= 94{,}182$ lbs-in / 274 in^3
$= 344$ psi

Radial Stress in Flange 2 @ Diameter B_1:

$S_{r2B1} = 6M_{SII} / \pi B_1 t_{II}^2$
$= 0$

Tangential Stress in Flange II at Diameter B1:

$S_{t2B1} = t_2 E_2 \theta_{B2} / B_1 + 1.8\, M_{SII} / \pi B_1 t_2^2$
$= 1.575$ in x 25,526 psi / 37.25 in + 0
$= 1{,}079$ psi

Radial and Tangential Stress at Center of Flange 2:

$S_{t2B2} = S_{r2B2} = (0.3094\, PB_1^2 / t_2^2) - (6\, M_{S2} / \pi B_1\, t_2^2)$
$= (0.3094 \times 14.7$ psi x 37.25^2 in^2 / 1.575^2 in^2)
- 0
$= 2{,}544$ psi $< S_n = 16{,}700$ psi

Welds Analysis and Calculations:

See UW-13 (e)(2), Fig. UW-13.2, section 2-3 and Fig. 2-4(4a), Appendix 2 of ASME VIII, Div.1. for the related codes and the physical representation of the nomenclatures.

Per above codes, it is required that the throat of the fillet $c = 0.7t_{min.} = 0.7 \times 0.375"$
$= 0.26"$,
So the fillet leg size is ~ 0.37" as shown in figure 5.1.

It is found that:
$t_p = 0.71" > 0.25"$
where the smallest of t_n, t_x and 0.25" is 0.25"

$c = t_n = 0.37"$ = leg of the fillet
$b = 0.16" + 2 \times \tan 15^o \times 0.375"$
$= 0.36"$
$a = 0.43" + 0.37"$
$= 0.80"$
$\therefore\ a + b = 0.36" + 0.80" = 1.16" \geq 3t_n = 1.125"$
The weld size design for the end flange is satisfactory.

Also run a weld strength calculation for the noted location as the 2nd analysis approach:

Radial pressure load F_{rp}:
$F_{rp} = P\ L_{sd}$
$= 14.7$ psi x 82.30 in
$= 1{,}210$ lbs/in

Shear flow due to radial shear load F_{sr}:
$F_{sr} = VQ/I$

where:
Radial shear load V:
$V = 0.01\ P\ L_{sd}\ D_o$
$= 0.01 \times 14.7$ psi x 82.30 in x 38.00 in
$= 460$ lbs.
The 1st moment of area Q:
$Q = 2.86$ in x 0.375 in x (1.1175 – 0.1875) in
$= 0.9974\ in^3$
$I = 2.842\ in^4$

$F_{sr} = VQ/I$
$= 460$ lbs. x $0.9974\ in^3 / 2.842\ in^4$
$= 162$ lbs/in

The required resultant weld load F_{rw}:

$$F_{rw} = (1{,}210^2 + 162^2)^{1/2} \text{ lbs/in}$$
$$= 1{,}221 \text{ lbs/in}$$

The welds for connecting the flange and the vessel shell is single groove weld inside and intermittent fillet outside, the lowest allowable weld stress F_{aw}:

$$F_{aw} = 0.60\ S_n = 0.60 \times 16.7 \text{ ksi}$$
$$= 10.02 \text{ ksi}$$

The requires calculated minimum weld size C_m:

$$C_m = F_{rw} / F_{aw}$$
$$= 1{,}221 / 10{,}020 \text{ (in)}$$
$$= 0.122 \text{ in} < 0.43 \text{ in (designated single groove weld)}$$

If adding the value of the outside intermittent fillet weld (0.37"), the weld size even can go further smaller size.
So, the design of the weld for the front end flange is satisfactory.

Per the above calculations and analysis, the front end flange has met the codes of ASME VIII, Div.1.

5.2. Rear End Flange and the Rear Vessel Head

References: ME-439769-2, MD-439737, MD-439872
and Figure 5.2

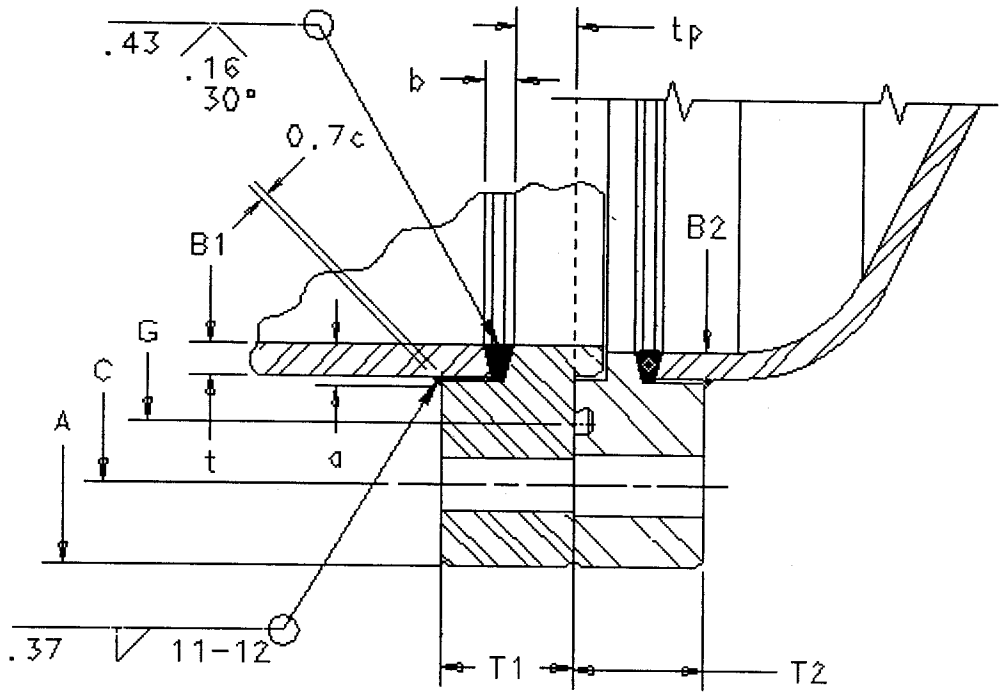

Figure 5.2. Rear End flange with the Rear Vessel Head

Per the reference drawings and figure 5.2, it is found that:
A = 42.52", G = 39.115", T_1 = 1.575", T_2 = 1.575", B_1 = 37.25", B_2 = 37.38",
C = 40.551"

4. n = 16, D = 0.719", A_{bd} = 3.2288 in^2 for designated 5/8" – 11 USC bolts
E = 28 x 10^6 psi, Modules of elasticity of the flange materials

Material: SA 182-F304L stainless steel, $F_a = S_f$ = 16,700 psi at the operating temp., -20^0 F to 100^0 F (per Table 1A, part D, Section II, ASME Boiler & Pressure Vessel Code 2004 edition).
S_b = 22.2 ksi for bolt material: SA-193, S316 for operating temperature, -20^0 F to 100^0 F (per Table 3, part D, Section II, ASME Boiler & Pressure Vessel Code 2004 dition).

Per section Y-5.1, Y-5.2, figure Y-5.1.3 of Appendix Y,
Section 2-4, figure 2-4 of Appendix 2 of ASME VIII:

It is defined as: Class 3, Category 3 flange

In order to reduce the amount of work required as shown on section 5.1, per section Y-9, of Appendix Y, ASME VIII, Div.1, we apply the method of estimating flange thickness and bolting for the downstream flanges.

$t_a = 2.45\ [Mp / ((\pi C - nD)S_f)]^{1/2}$
(per eq. 39 of Y-9, appendix Y, ASME VIII, Div.1)

where:
$M_p = H_D h_D + H_T h_T + H_G h_G$ (per sectionY-3, Appendix Y, ASME VIII)

$H_D = 0.785\ B_1^2\ P$
$= 0.785 \times 37.25^2\ in^2 \times 14.7\ psi$
$= 16{,}012$ lbs.

$H = 0.785 G^2 P$
$= 0.785 \times 39.115^2\ in^2 \times 14.7\ psi$
$= 17{,}655$ lbs.

$H_T = H - H_D$
$= (17{,}655 - 16{,}012)$ lbs.
$= 1{,}643$ lbs.

$h_G = (C - G)/2$
$= (40.551 - 39.115)in / 2$
$= 0.718$ in

$h_D = (C - B) / 2$
$= (40.551 - 37.25) / 2$
$= 1.6505$ in

$h_T = (h_D + h_G) / 2$
$= 1.1843$ in

$H_G = W - H$, gasket load
(per section 2-3, appendix 2, ASME VIII)
$W = H + H_p$,
flange design load for the operating condition
(per section 2-5(c)(1), appendix 2, ASME VIII)

which leads to:

$H_G = W - H$
$= H + H_p - H$
$= H_p$
$= 2b \times 3.14GmP$
$= 2 \times 0.255\ in \times 3.14 \times 39.115\ in \times 3.50 \times 14.7\ psi$
$= 3{,}223$ lbs.

$M_p = H_D h_D + H_T h_T + H_G h_G$
$= (16{,}012 \times 1.6505 + 1{,}643 \times 1.1843 + 3{,}223 \times 0.718)$ lbs-in
$= (26{,}428 + 1{,}946 + 2{,}314)$ lbs-in
$= 30{,}688$ lbs-in

$t_a = 2.45\ [Mp / ((\pi C - nD)S_f)]^{1/2}$
$= 2.45 \times [\ 30{,}688 \text{ lbs-in} / ((\pi\ 40.551 \text{ in} - 16 \times 0.718 \text{ in}) \times 16{,}700 \text{ psi})]^{1/2}$
$= 2.45 \times 0.1259$ in
$= 0.3085$ in

$t_b = 0.56\ B_1\ (P/S_f)^{1/2}$
$= 0.56 \times 37.25 \text{ in} \times (14.7 \text{ psi} / 16{,}700 \text{ psi})^{1/2}$
$= 0.56 \times 37.25 \text{ in} \times 0.0297$
$= 0.620$ in

Since t_c is the greater of t_a or t_b, so:
$t_c = t_b = 0.620$"

Per equation 42 of A-7, Appendix Y, ASME VIII, Div. 1:

$A'_b = (H + 2\ M_p / (A - C)) \div S_b$
$= (17{,}655 \text{ lbs} + 2 \times 30{,}688 \text{ lbs-in} / (42.52 - 40.551) \text{ in}\ ) \div 22{,}200$ psi
$= (17{,}655 \text{ lbs} + 31{,}171 \text{ lbs}) / 22{,}200$ psi
$= 2.1994 \text{ in}^2$

Per Table Y-9.1, Appendix Y, ASME VIII, Div.1, it is found:

$t_1 = 1.1t_a = 0.3394" < T_1 = 1.575"$
$t_2 = 1.1t_c = 0.682" < T_2 = 1.575"$
$A_b = 1.1A'_b = 2.419 \text{ in}^2 < A_{bd} = 3.2288 \text{ in}^2$

So the thickness of the flange and bolts are ok for the rear end flanges.

Welds Analysis and Calculations:

The weld configurations are the same as the front end flange, it designed per section UW-13 (e)(2), Fig. UW-13.2, section 2-3 and Fig. 2-4(4a), Appendix 2 of ASME VIII, Div.1

Also, since the valus of L_{sd} for rear end flange is the same as for the front end flange), "I" value for rear end flange is similar as the front end flange, all these lead to a similar values of F_{rw} and C_m for the rear end and front end flanges, so the same sizes and types of the weld design of the rear end flange are satisfactory.

Per the above calculations, the rear end flange has met the codes of ASME VIII, Div.1.

Notes: The most updated vessel design has made the front end flange is the same as the

rear end flange. So the calculations on section 5.1 should be applicable to both front and rear end flanges. However, the calculations on section 5.2 showed the procedures for the estimating the flange thickness and the size of the bolts, these equations were applied to the spread sheet for calculation of flanges #4, #5 and #6 on section 5.3.

5.3. Calculations for Flanges #6, #5 and #4

In order to reduce the amount of work required as shown on section 5.1, per section Y-9, of Appendix Y, ASME VIII, Div.1, we apply the method of estimating flange thickness and bolting for the above flanges.

Table 5.3, Estimated Calculated Flange thickness and bolting VS. the designated data

		Flanges (see drawing ME-439769)		
nomenclature	unit	#6	#5	#4
		MC-439721	COML	COML
P	psi	14.7	14.7	14.7
S_f	psi	16,700	16,700	16,700
A	in	10.945	7.5	16
B_1	in	8.386	3.88	11.75
B_2	in	0	0	0
C	in	9.646	6	14.25
G	in	9.016	4.78	13
Classification		3	3	3
Categorization		3	3	3
n		24	4	12
D	in	0.35	0.75	0.8125
m		3.5	3.5	3.5
b		0.21	0.16	0.21
H_D	lbs	812	174	1593
H	lbs	938	264	1950
H_T	lbs	127	90	357
h_G	in	0.315	0.61	0.625
h_D	in	0.63	1.06	1.25
h_T	in	0.4725	0.8350	0.9375
H_G	lbs	612	247	882
M_P	lbs-in	764	410	2877
t_a	in	0.1120	0.0965	0.1719
t_b	in	0.1393	0.0645	0.1952
t_c	in	0.1393	0.0965	0.1952
A'_b	in^2	0.1266	0.0485	0.3137
t_1	in	0.1232	0.1061	0.1891
t_2	in	0.1533	0.1061	0.2147
A_b	in^2	0.1329	0.0509	0.3294
t_{1d}	in	0.787	0.5	0.75
t_{2d}	in	N/A	N/A	N/A
A_{bd}	in^2	1.088	0.8027	3.4167

The most nomenclatures of the Table 5.3 can be found from section 5.1 of this note, also from the appendix 2 and appendix Y of ASME VIII, Div.1, except:

t_1, Estimated calculated flange 1 thickness

t_2, Estimated calculated flange 2 thickness

A_b, Estimated calculated root diameter area of the bolts.
t_{1d}, Designated flange 1 thickness
t_{2d}, Dersignated flange 2 thickness
A_{bd}, Designated root diameter area of the bolts.

Per table 5.3, it is found that all $t_1 > t_{1d}$; $t_2 > t_{2d}$ and $A_b > A_{bd}$ for all respective flanges, so the flange design are satisfactory.

6. The Discussions of the Saddle Support design

Reference dwgs & documents: ME-439769, MD-439871
"Pressure Vessel Handbook" 7th edition by E. Megyesy
Figure 6.1

Figure 6.1 is the 2D layout of the horizontal test vessel with both dished heads on, for calculating simplicity, it made some conservative assumptions.

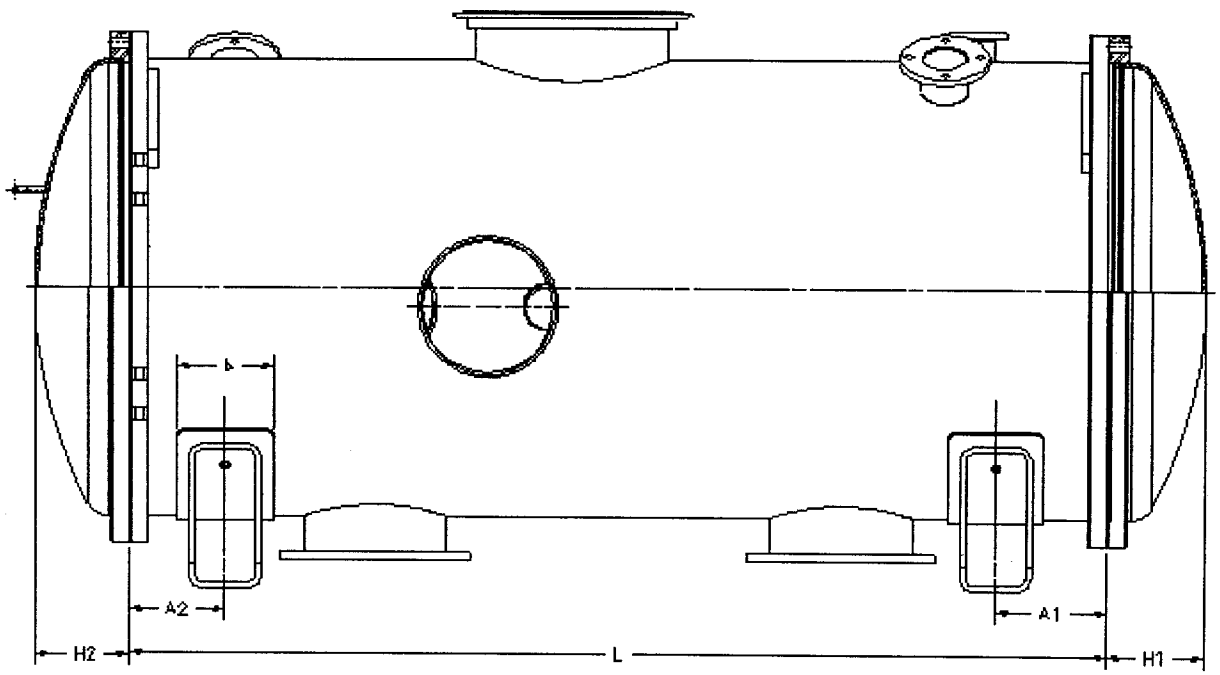

Figure 6.1, 2D view of the horizontal test vessel with front and rear dished heads

It is assuming that:

$L \approx 82.30$ in, shell length
$A1 \approx A2 = 9.37$ in, distance between saddle support to the end of the shell
$H1 \approx H2 = 12.29$ in, depth of the dished head
$b = 8.0$ in, width of the saddle flange plate
$R = 19.0$ in, radius of the shell
$t_s = 0.375$ in, vessel shell thickness
$t_h = 0.3125$ in, head shell thickness
$\theta = 104^o$, angle of the contact of the saddle support
(See section C-C of drawing ME-439769-2)
K_i, constant, see the "Pressure Vessel Handbook" 7th edition by E. Megyesy

Page 88 and page 89 for the value K_i (interpolation from the existing table and chart)

$2Q = W_{vt} = 2{,}536$ lbs, total weight of the vessel see page 6,
assuming $Q_1 = Q_2 = 1{,}268$ lbs, $Q_1 + Q_2 = 2Q = 2{,}536$ lbs.

Find the stresses on two saddle supports:

Longitudinal bending stress @ the saddle support $f_{lb@s}$:

$$f_{lb@s} = \pm QA \{ 1- [1 - (A/L) + (R^2 - H^2)/2AL] / (1 + 4H/3L)\} \div K_1R^2t$$
$$= \pm 1{,}268 \text{ lbs} \times 9.37 \text{ in} \times \{ 1- [1 - (9.37/82.3) + (19^2 - 12.29^2)/(2 \times 9.37 \times 82.3)] / (1 + 4 \times 12.29/3 \times 82.30)\} \div 0.315 \times 19^2 \times 0.375 \text{ in}^3$$
$$= \pm 11{,}881 \text{ lbs-in} \times [1 - (1 - 0.1139 + 0.1361) / 1.1991] \div 42.6431 \text{ in}^3$$
$$= \pm 11{,}881 \text{ lbs-in} \times (1 - 0.8525) \div 42.6431 \text{ in}^3$$
$$= \pm 41 \text{ psi}$$

Longitudinal bending stress @ the midspan of the saddle support $f_{lb@m}$:

$$f_{lb@m} = \pm 0.25QA \{(1 + 2(R^2 - H^2)/L^2) / (1 + 4H/3L) - 4A/L\} \div \pi R^2t$$
$$= \pm 0.25 \times 1{,}268 \times 9.37 \text{ lbs-in} \times (1.062 / 0.1991 - 0.4554) \div 425.293 \text{ in}^3$$
$$= \pm 34 \text{ psi}$$

The stress due to the pressure f_p:

$$f_p = PR / 2ts$$
$$= 14.7 \text{ psi} \times 19 \text{ in} / (2 \times 0.375) \text{ in}$$
$$= 373 \text{ psi}$$

The sum of the tensional stress f_t:

$$f_t = f_p + f_{lb@s}$$
$$= 373 \text{ psi} + 41 \text{ psi}$$
$$= 414\text{psi} < F_a = 16{,}700 \text{ psi}$$

Tangential shear stress in vessel shell $f_{ts@s}$

$$f_{ts@s} = K_4Q / Rt_s$$
$$= 1.133 \times 1{,}268 \text{ lbs} / (19 \text{ in} \times 0.375 \text{ in})$$
$$= 202 \text{ psi}$$

Tangential shear stress in vessel head $f_{ts@h}$

$$f_{ts@hs} = K_4Q / Rt_h$$
$$= 1.133 \times 1{,}268 \text{ lbs} / (19 \text{ in} \times 0.3125 \text{ in})$$
$$= 242 \text{ psi}$$

Circumferential stress @ the horn of the saddle $f_{ci@hs}$:

$$f_{ci@hs} = - (Q / [4t_s(b + 1.56(Rt_s)^{1/2})] - (12K_6QR / Lt_s^2)$$
$$= - (1{,}268 \text{ lbs}/ [4 \times 0.375 \text{ in} \times (8 + 1.56(19 \times 0.375)^{1/2} \text{ in})] - (12 \text{ X } 0.017 \times 1{,}268 \text{ lbs} \times 19 \text{ in} / (82.30 \text{ in} \times 0.375^2 \text{ in}^2))$$
$$= - 69.49 \text{ psi} - 424.66 \text{ psi}$$
$$= - 494.15 \text{ psi}$$

Circumferential stress @ the bottom of the shell $f_{ci@bs}$:

$$f_{ci@bs} = - K_7Q / [ts(b + 1.56 (Rt_s)^{1/2}]$$
$$= - 0.8144 \times 1{,}268 \text{ lbs} \div [0.375 \text{ in} \times (8 + 1.56(19 \times 0.375)^{1/2} \text{ in})]$$
$$= - 1{,}032.66 \text{ lbs} \div 4.001 \text{ in}^2$$
$$\approx - 258 \text{ psi}$$

All calculated working stresses f_i related to the saddle support design are far below than the allowable stress F_a, so the design of the saddle support is satisfactory.

7. Calculations for the Vacuum Formed Head Shell Thickness

Type: 2:1 Ellipsoidal head, **pressure on convex side**
Reference drawings: MD-439871, MC-439810

Given:

- P: 14.7 psi, the external design pressure
- P_a: The max. allowable external working pressure.
- D: 37.375 in, inside length of the major axis of an ellipsoidal head
- t: = 0.3125 in, the nominal head shell thickness,
- S: 16,700 psi, the max. allowable stress of the shell material under the operating temp, -20° F to 100° F, also know as S_v. for vessel shell material SA 240-304L, stainless steel, see dwg. #MC-439810 (per Table 1A, part D, section II, ASME VIII, 2004 edition)
- h_o: 9.50", one half of the length of the outside minor axis of the ellipsoidal head.
- E: Joint efficiency, since it is formed head, so assuming E = 1.0
- K_o: factor depending on the ellipsoidal head proportions
- R_o: the equivalent outside spherical radius, = K_oD_o
- D_o: Outside diameter of the head skirt.

Find out the required head shell thickness t_h:

Per sections of UG-33 (a)(1)(a) and UG-32 (d) of ASME VIII, Div.1:

t_{h1} = 1.67 PD / (2SE – 0.2P)
= (1.67 x 14.7 psi x 37.375 in) / (2 x 16,700 psi x 1.0 – 0.2 x 14.7 psi)
= 917.52 psi-in / 33,397 psi
= 0.0275 in

Per section UG-33 (d) of ASME VIII, Div.1 and drawing MC-439810,
It found that:
$D_o/2h_o$ = 38.0 in / 2 x 9.50 in = 2.0
From Table UG-33.1, it found that:
K_o = 0.90
So: Ro = K_oD_o = 0.90 x 38.0 in = 34.2 in

If assuming t_{h2} = 0.10 in, then:
A = 0.125 / (Ro/ t_{h2})
= 0.125 / 342
= 0.000365

Referring to the Figure HA-3 in Subparts 3 of Section II, part D,
ASME VIII, 2005 Addenda, July 1, 2005
It found out that:

B ≈ 5,050

$P_a = B / (Ro/ t_{h2})$
$= 5{,}050 \div 342$
$= 14.77$ psi $= P = 14.7$ psi

Since $\underline{t_{h2} = 0.10 \text{ in} > t_{h1} = 0.0275 \text{ in}}$

So the calculated formed head shell thickness $t_h = 0.10$ in,
And also: $t_h = 0.10 \text{ in} < t = 0.3125$ in

The designated formed head shell thickness $t = 0.3125$ in is satisfactory.