Fermilab

Particle Physics Division

12-01-01

Mechanical Department Engineering Note

Number: MD-Eng-091 Date: September 16, 2005

Project: New Muon Lab

Project Internal Reference:

Title: New Muon Lab Loading Dock Shoring

Author(s): Robert J. Woods

Reviewer(s):

Key Words: New Muon Lab, Loading Dock, Shoring, CCM Magnet

Abstract/Summary:

The CCM Magnet is to be disassembled and removed from the New Muon Lab. The proposed method of removal is to move the large magnet pieces to the existing loading dock on the north end of the building using a gantry crane. The gantry crane will be supported on rails installed on top of the loading dock. These support rails will span between the existing loading dock concrete beams.

A flat bed trailer will be backed down the ramp, onto the loading dock between the gantry legs. The magnet piece will be lowered on to the trailer and removed from the building.

This calculation investigates the existing loading dock slab and support beams for the load of the magnet pieces. It also contains the design of a shoring system to provide additional support to the existing concrete slab and beams since they were found to be inadequate to carry the load of the larger magnet pieces.

Applicable Codes:

1. AISC *Manual of Steel Construction*, Allowable Stress Design, Ninth Edition

2. Hilti *North American Product Technical Guide* 2001 edition.

3. *Building Code Requirements for Reinforced Concrete*, ACI 318-89

COIL MAGNET:
LARGEST BLOCK = 80T
= 160,000#

FROM ORIGINAL MUON LAB SOIL BORINGS:

5892 = 2.3 T/FT2 @ 13.0'
5893 = 2.3 T/FT2 @ 13.0'
5897 = 2.7 T/FT2 @ 13.0'

AVERAGE = (2.3+2.3+2.7)/3
= 2.4 T/FT2

2.4 (2,000) = 4800 #/FT2

SAY 4500 #/FT2

MAXIMUM WHEEL LOAD FOR GANTRY:

	SERVICE		ULTIMATE
STEEL BLOCK WT =	160,000 #	× 1.7 =	272000 #
ASSUME GANTRY =	40,000 #	× 1.4 =	56 600 #
	200,000 #		= 328,000 #

FOR 4 WHEEL GANTRY:

MAX WHEEL LOAD = 200,000/3 = 67,000 # 328,000/3 = 109,000 #

ALLOWABLE BEARING STRENGTH:

$\phi(0.85 f'_c) = 0.70(0.85)(4000)$
= 2380 psi

109,000/2380 = 46 IN2

CHECK EXISTING LOADING DOCK BEAM CAPACITY:

BEAM DIMENSIONS:

$b = 18''$ $h = 34''$

$\beta_1 = 0.85$ FOR $f'_c = 4000$ (ACI 10.2.7.1)

$A_s = 8(1.56\ IN^2) = 12.48\ IN^2$

$A'_s = 3(1.00\ IN^2) = 3.00\ IN^2$

$d = 34 - (1.5 + 1.5(1.410)) = 30.385''$

$d' = 1.5 + .5(1.128) = 2.063''$

$$p = \frac{A_s}{bd} = \frac{12.48}{18(30.385)} = 0.0228$$

$$p' = \frac{A'_s}{bd} = \frac{3.00}{18(30.385)} = 0.0055$$

$$p_b = 0.85\beta_1 \frac{f'_c}{f_y} \frac{87000}{87000 + f_y}$$

$$= 0.85(0.85)\left(\frac{4000}{60000}\right)\left(\frac{87000}{87000+60000}\right)$$

$$= 0.0285$$

$$p_{max} = 0.75\ p_b = 0.75(0.0285) = 0.0214$$

$$(p-p')_{max} = 0.75 p_b = 0.0214$$

$$(p-p')_{min} = 0.85\beta_1 \frac{f'_c}{f_y} \frac{d'}{d} \frac{87000}{87000 - f_y}$$

$$= 0.85(0.85)\left(\frac{4000}{60000}\right)\left(\frac{2.063}{30.385}\right)\left(\frac{87000}{87000-60000}\right)$$

$$= 0.0105$$

$$p - p' = 0.0228 - 0.0055 = 0.0173$$

SINCE $0.0105 < 0.0173 < 0.0214$
FAILURE WILL BE INITIATED BY TENSILE YIELDING AND COMPRESSION STEEL WILL HAVE YIELDED @ FAILURE

$$\phi M_1 = \phi A_s f_y (d - d') = 0.90(3.0)(60000)(30.385 - 2.063)$$

$$= 4{,}588{,}164\ \#\text{-IN}$$

$$a = \frac{(A_s - A'_s) f_y}{0.85 f'_c b} = \frac{(12.48 - 3.00)(60000)}{0.85(4000)(18)} = 9.29''$$

$$\phi M_2 = \phi (A_s - A'_s) f_y (d - a/2) = 0.9(12.48 - 3.00)(60000)\left(30.385 - \frac{9.29}{2}\right)$$

$$= 13\ 176\ 821\ \#\text{-IN}$$

$$\phi M_u = 4{,}588{,}164 + 13{,}176{,}821$$

$$= 17{,}764{,}985\ \#\text{-IN}$$

CHECK FIRST BEAM IN FROM OVERHEAD DOOR (LONGEST SPAN)

SPAN = 333.5"

CASE 1 - 2 EQUAL LOADS

BEAM LOAD + SLAB LOAD
(SEE BELOW)

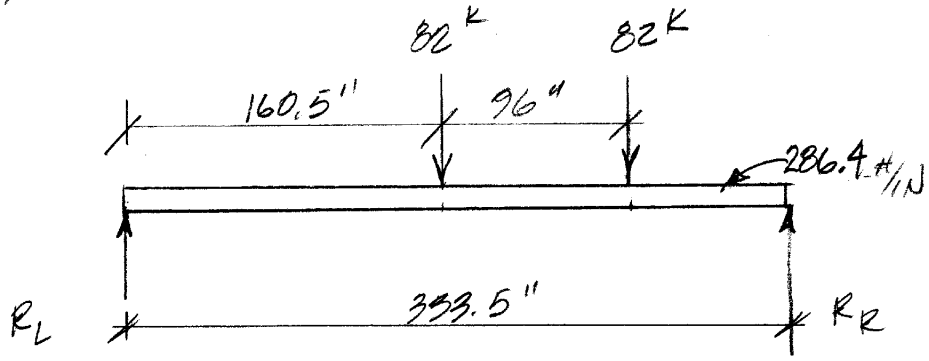

$$R_R = \frac{286.4(333.5)(333.5/2) + 160.5(82{,}000) + 256.5(82{,}000)}{333.5}$$

$= 150{,}288$ #

$$R_L = \frac{286.4(333.5)(333.5/2) + 77(82{,}000) + 173(82{,}000)}{333.5}$$

$= 109{,}226$ #

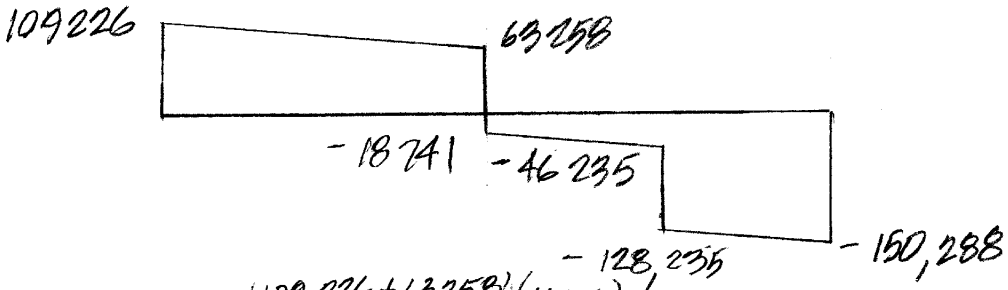

$$M_x = \frac{(109\,226 + 63\,258)(160.5)}{2}$$

$= 13{,}841{,}841$ #-IN

BEAM DEAD LOAD:

$18(34)/144\,(150) = 637.5$ #/FT
$\times 1.4 = 892.5$ #/FT $= 74.4$ #/IN

SLAB DEAD LOAD:

$(12.083 + 12.167)/2\,(150) = 1818.8$ #/FT
$\times 1.4 = 2546.3$ #/FT $= 212$ #/IN

$74.4 + 212 = 286.4$ #/IN

CHECK BEAM SHEAR:

$$V_c = 2\sqrt{f'_c}\ b_w d = 2\sqrt{4000}\ (18)(30.385)$$
$$= 69180\ \#$$

$$\phi V_c = 0.85(69180)$$
$$= 58803\ \#$$

$$V_u = 150288\ \#$$

$$\phi V_s = V_u - \phi V_c$$
$$= 150288 - 58803$$
$$= 91485\ \#$$

$$s = \frac{A_v f_y d}{V_s}$$

$$12 = \frac{2(0.31)(60000)(30.385)}{V_s}$$

$$94194 = V_s$$

$$0.85(94194) = \phi V_s$$
$$80065\ \# = \phi V_s \quad < 91485\ \#\ \underline{\underline{N.G.}}$$

BEAM FAILS IN SHEAR @ END

BEAM REQUIRES SHORING.

CHECK SLAB:

MAX. SPAN = 12'-2 = 12.167' = 146"

SLAB DEPTH = 10" $d = 10 - \left(\frac{3}{4} + \frac{1.128}{2}\right)$ $A_s = 1.0$
$= 8.686$

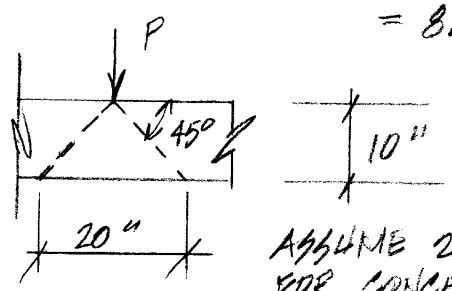

ASSUME 20" EFFECTIVE WIDTH FOR CONCENTRATED WHEEL LOAD

$$c_b = d\left(\frac{\varepsilon_c}{\varepsilon_c + \varepsilon_y}\right) = 8.686\left(\frac{0.003}{0.003 + 0.0021}\right)$$
$$= 5.14$$

$$a = \frac{A_s f_y}{0.85(f'_c)(b)} = \frac{1.0(60\,000)}{0.85(4000)(20)} = 0.882$$

$$\phi M_n = \phi\left(0.85 f'_c b a\left(d - a/2\right)\right)$$
$$= 445{,}042 \text{ \#-in}$$

$$M_u = 82{,}000(146)/4 + \frac{1.4(10/12)(150)(146)^2}{8}$$

$$= 3{,}459{,}288 > 445{,}042 \text{ N.G.}$$

SLAB MUST BE SHORED

DESIGN SHORING TO CARRY LOAD OF CCM PIECES:

SLAB SUPPORT:

SPAN = 12.167' MAX. LOAD = 67,000#

$M = 67{,}000(12.167)/4$
$= 203{,}797$ #-IN

TRY W 21 X 101 $d/A_f = 2.17$

$F_b = \frac{12\times10^3(C_b)}{12.167(12)(2.17)} = 37.9$ KSI

USE $0.60(F_y) = 0.60(36)$
$= 21.6$ KSI

$S_{X\,REQ'D} = \frac{203797}{21600}$
$= 9.4$ IN^3 < 227 IN^3 ok

TRY W18 X 50 $d/A_f = 4.21$

$F_b = \frac{12\times10^3(1.0)}{12.167(12)(4.21)} = 19.52$

$S_{X\,REQ'D} = \frac{203797}{19520} = 10.4$ IN^3 < 88.9 ok

WEB YIELDING:

MAX END REACTION = $0.66\,F_{yw}t_w(N + 2.5K)$
$K = 1.25$ $t_w = 0.355$ $N = 7.5''$
(AISC K1-2 p5-81)

$= 0.66(36)(0.355)(7.5 + 2.5(1.25))$
$= 89.6^K > 67.0^K$ ok

MAX INTERIOR LOAD = $0.66\,F_{yw}t_w(N + 5K)$
(AISC K1-3 p5-81)

$= 0.66(36)(0.355)(7.5 + 5(1.25))$

$= 115.9^K > 67.0^K$ ok

WEB CRIPPLING:
(AISC K1-5 p5-81)
LOAD WILL BE @ A DISTANCE LESS THAN $d/2$ FROM END OF MEMBER

$R = 34t_w^2\left[1 + 3\left(\frac{N}{d}\right)\left(\frac{t_w}{t_f}\right)^{1.5}\right]\sqrt{F_{yw}\,t_f/t_w}$
$= 34(0.355)^2\left[1 + 3\left(\frac{7.5}{17.99}\right)\left(\frac{0.355}{0.570}\right)^{1.5}\right]\sqrt{36\left(\frac{0.570}{0.355}\right)}$
$= 52.6^K < 67.0$

∴ END STIFFENER NEEDED

LOAD WILL BE @ A DISTANCE GREATER THAN d/2 FROM END OF MEMBER

$$R = 67.5 t_w^2 \left[1 + 3\left(\frac{N}{d}\right)\left(\frac{t_w}{t_f}\right)^{1.5}\right]\sqrt{F_{yw}\frac{t_f}{t_w}}$$

$$= 67.5(0.355)^2\left[1 + 3\left(\frac{7.5}{17.99}\right)\left(\frac{0.355}{0.570}\right)^{1.5}\right]\sqrt{36\,\frac{0.570}{0.355}}$$

$= 104.4^k > 67.0$ ∴ INTERIOR STIFFNER NOT NEEDED

BEAM SHEAR:

END REACTION = 67.0 K

$h/t_w = (17.99 - 2(.570))/0.355$

$= 47.5$

$380/\sqrt{36} = 63.3$ $\quad h/t_w < 380/\sqrt{36}$

∴ $F_V = 0.40 F_y$ (AISC F4-1 p 5-49)

$= 0.40(36)$

$= 14.4$ KSI

MAX LOAD $= 14.4(17.99)(0.355)$

$= 92.0^k > 67.0^k$ ok

END CONN. TO EXIST. LONG. BEAM:

BEAM END REACTION DUE TO SELF-WEIGHT:

$50(12.167)/2 = 304^\#$

FOR 5/8" ø HILTI DROP-IN ANCHORS TO HOLD BEAM WHILE SHIELD BLOCKS ARE PLACED:

4000 PSI CONC.

ALLOW. SHEAR/BOLT = 3250# (HILTI P136)

ASSUME 6" CTOC ANCHOR SPACING LOAD REDUCTION:

$3250(0.61) = 1982.5^{\#/BOLT}$ (HILTI P136)

4 BOLTS $= 4(1982.5)$

$= 7930^\# > 304^\#$ ok

USE 4 - 5/8" ø DROP-IN ANCHORS EA. END

STEEL TO STEEL BEARING:

$F_p = 0.90 F_y = 0.90(36) = 32.4$ KSI

BEARING AREA $= 7.495^2 = 56.2$ IN^2

$P_{ALLOW} = 32.4(56.2) = 1821^k > 67.0^k$ ok

CHECK LOCAL FLANGE BENDING:

$$t_f > 0.4\sqrt{\frac{P_{bf}}{F_{yc}}}$$

WHERE $P_{bf} = 5/3\,P$ FOR DL+LL

$= 4/3\,P$ FOR DL+LL+E

F_{yc} = COLUMN YIELD STRESS

$$t_f \overset{?}{>} 0.4\sqrt{\frac{67(5/3)}{36}}$$

$$\overset{?}{>} 0.704$$

$t_f = 0.570 < 0.704$ N.G.

<u>USE W18 x 65</u> $t_f = 0.750$

DESIGN STEEL BEAM TO SUPPORT SLAB SUPPORT STEEL BEAMS:

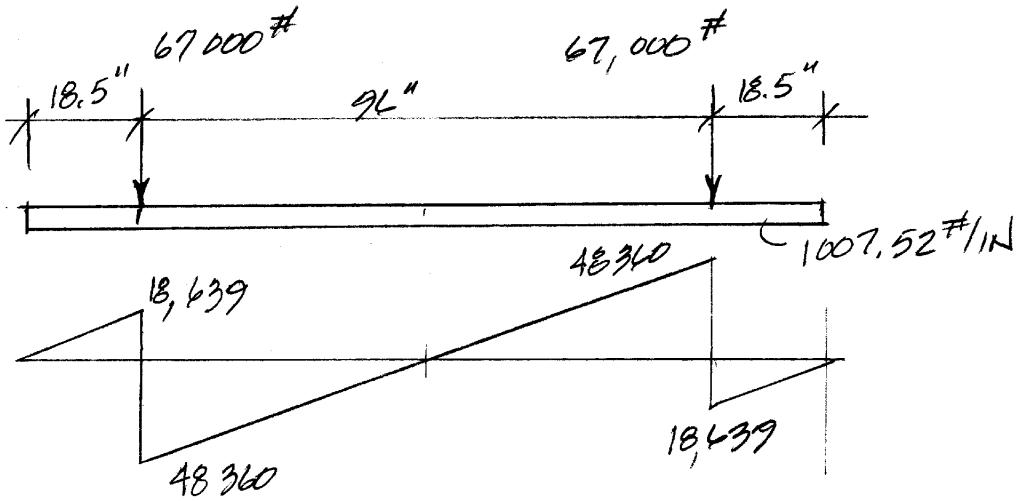

$+M = 18639(18.5)/2 = 172411$ #-IN

$-M = 172411 - 48360(48)/2 = -988229$ #-IN

FOR $F_B = 0.60 F_y = 0.60(36)$ (COMP FLANGE BRACED BY HILTI ANCH.)
$= 21.6$ KSI $= 21600$ PSI

$S_{x\,REQ'D} = 988229/21{,}600$
$= 45.8$ IN^3

TRY W 14×38 $S_x = 54.6$ IN^3 $b_f = 6.77$"

BEARING ON CONCRETE BLOCK:

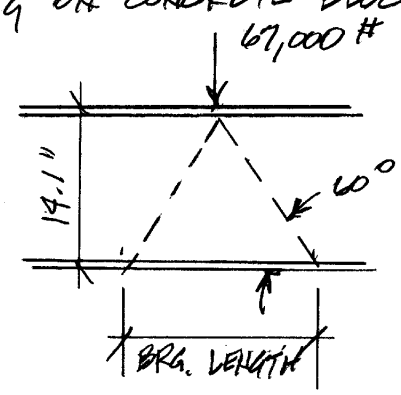

BRG LENGTH $= 14.1(\tan 30)(2)$
$= 16.28$"

BRG AREA $= 6.77(16.28)$
$= 110$ IN^2

BRG. PRESSURE $= \frac{67000}{110}$
$= 608$ PSI

$f_p = \phi(0.85 f'_c A_1)$ (ACI 10.15.1)
$= 0.70(0.85)(5000)(110)$
$= 327{,}250$ #

ULTIMATE LOAD $= 1.7(67{,}000) =$
$113{,}900$ # $< 327{,}250$
OK

LOCAL WEB YIELDING:

$$\frac{R}{t_w(N+5k)} \le 0.66F_y$$

$$\frac{67000}{0.310(16.28+5(1.0625))} = 10,009 < 23,760 \quad \underline{ok}$$

WEB CRIPPLING:

$$R = 67.5t_w^2\left[1+3\left(\frac{N}{d}\right)\left(\frac{t_w}{t_f}\right)^{1.5}\right]\sqrt{F_{yw}\, t_f/t_w}$$

$$= 67.5(0.310)^2\left[1+3\left(\frac{16.28}{14.10}\right)\left(\frac{0.310}{0.515}\right)^{1.5}\right]\sqrt{36\left(\frac{0.515}{0.310}\right)}$$

$$= 131^K > 67^K \quad \underline{ok}$$

LOCAL FLANGE BENDING:

$$t_f > 0.4\sqrt{\frac{P_{bf}}{F_{yc}}} \qquad P_{bf} = 67,000(5/3) = 111,667^{\#}$$

$$0.4\sqrt{\frac{111.7}{36}} = 0.705'' > 0.515$$

∴ STIFFNERS REQ'D

<u>USE W 14 x 38</u>

STEEL BEAM BETWEEN EXIST. CONC BEAM & SHIELD BLOCK

TRY W 10 x 49

BRG. LENGTH = 9.98(TAN 30°)2
= 11.52"

BRG. AREA = 11.52(10.00) = 115.2 IN²

$$f_p = \phi(0.85f'_c A_1)$$
$$= 0.70(0.85(5000)(115.2))$$
$$= 342\,720^{\#} > 113,900^{\#} \quad \underline{ok}$$

LOCAL WEB YIELDING:

$$\frac{R}{t_w(N+5k)} \le 0.66F_y$$

$$\frac{67,000}{0.340(11.52+5(1.1875))} = 11288 < 23,760 \quad \underline{ok}$$

WEB CRIPPLING:

ASSUME REACTION CAN BE APPLIED AT A DISTANCE OF LESS THAN d/2 FROM END OF MEMBER:

$$R = 34 t_w^2 \left[1 + 3\left(\frac{N}{d}\right)\left(\frac{t_w}{t_f}\right)^{1.5}\right] \sqrt{F_{yw}\, t_f/t_w}$$

$$= 34(0.340)^2 \left[1 + 3\left(\frac{11.52}{10}\right)\left(\frac{0.340}{0.560}\right)^{1.5}\right] \sqrt{36\left(\frac{0.560}{0.340}\right)}$$

$$= 79.8^k > 67.0^k \quad \underline{\underline{OK}}$$

LOCAL FLANGE BENDING:

$$t_f > 0.4\sqrt{\frac{P_{bf}}{F_{yc}}}$$

$$0.4\sqrt{\frac{111.7}{36}} = 0.705'' > 0.560''$$

$\therefore$ STIFFNERS REQ'D

<u>USE W 10 X 49</u>

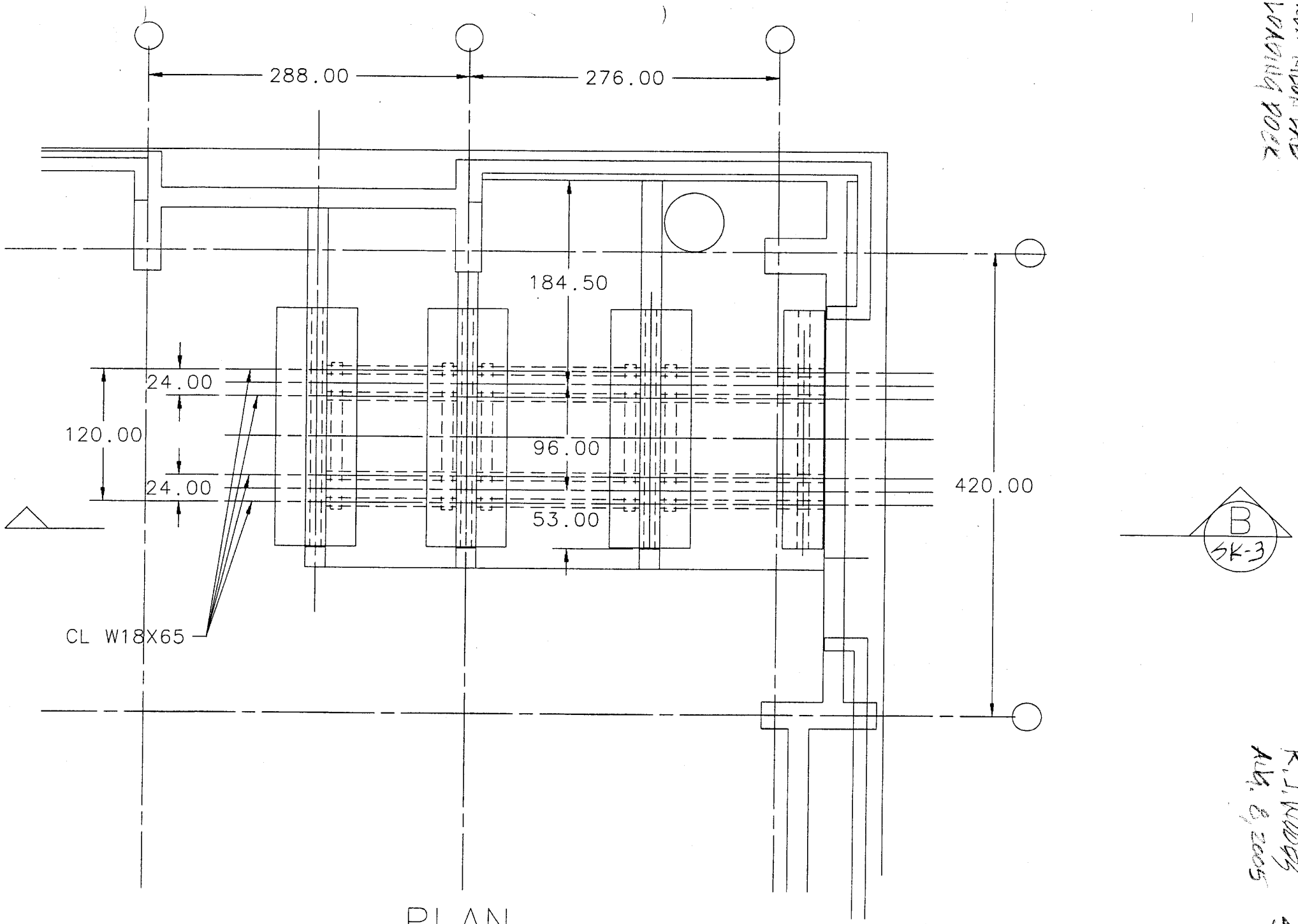

PLAN

NEW NAVAL LAB
LOADING DOCK

R.J. WOODY
AUG. 8, 2005

SK-1

NEW MUON LAB
LOADING DOCK

R. J. WOODY
AUG. 8, 2005

SK-2

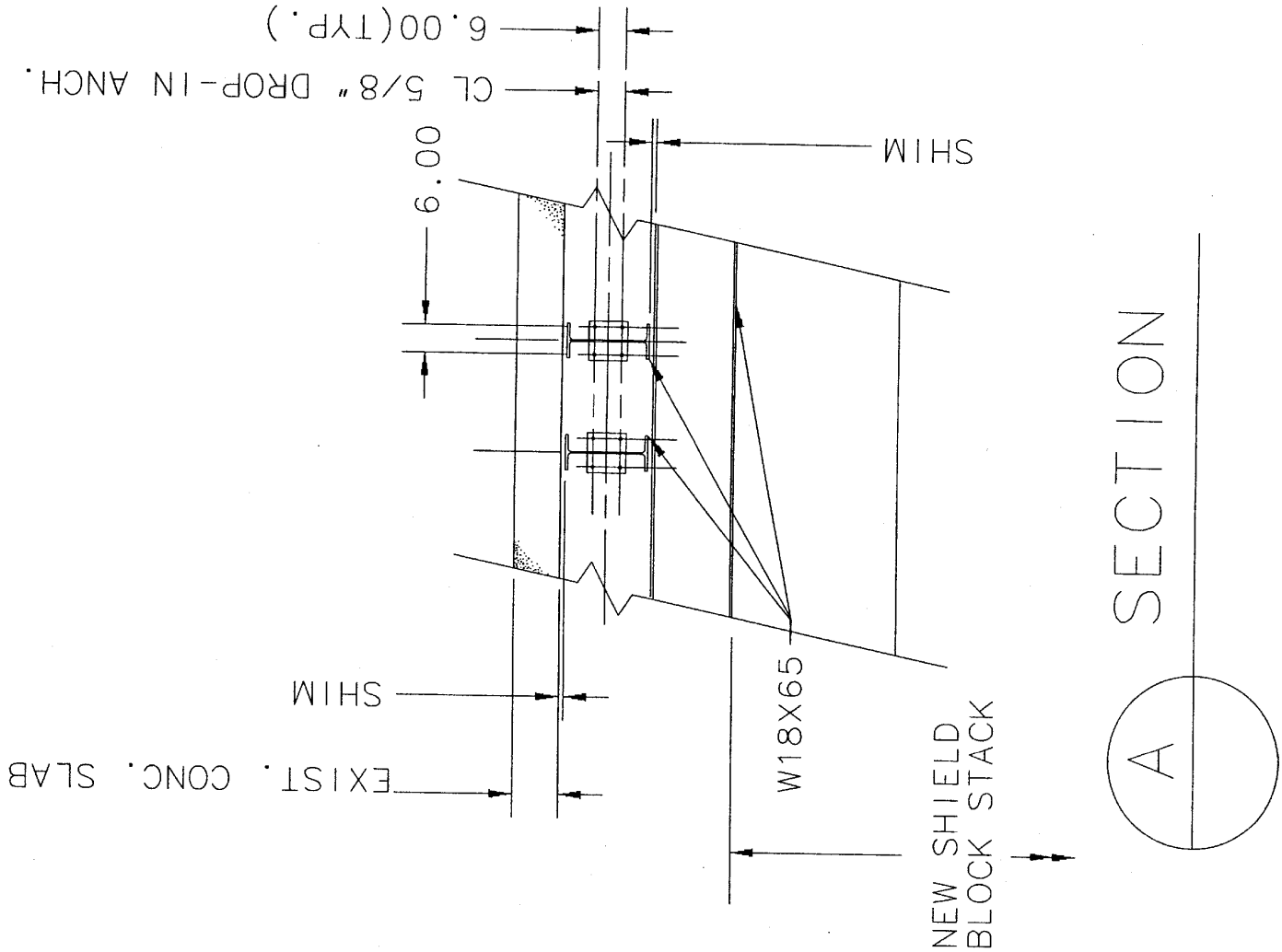

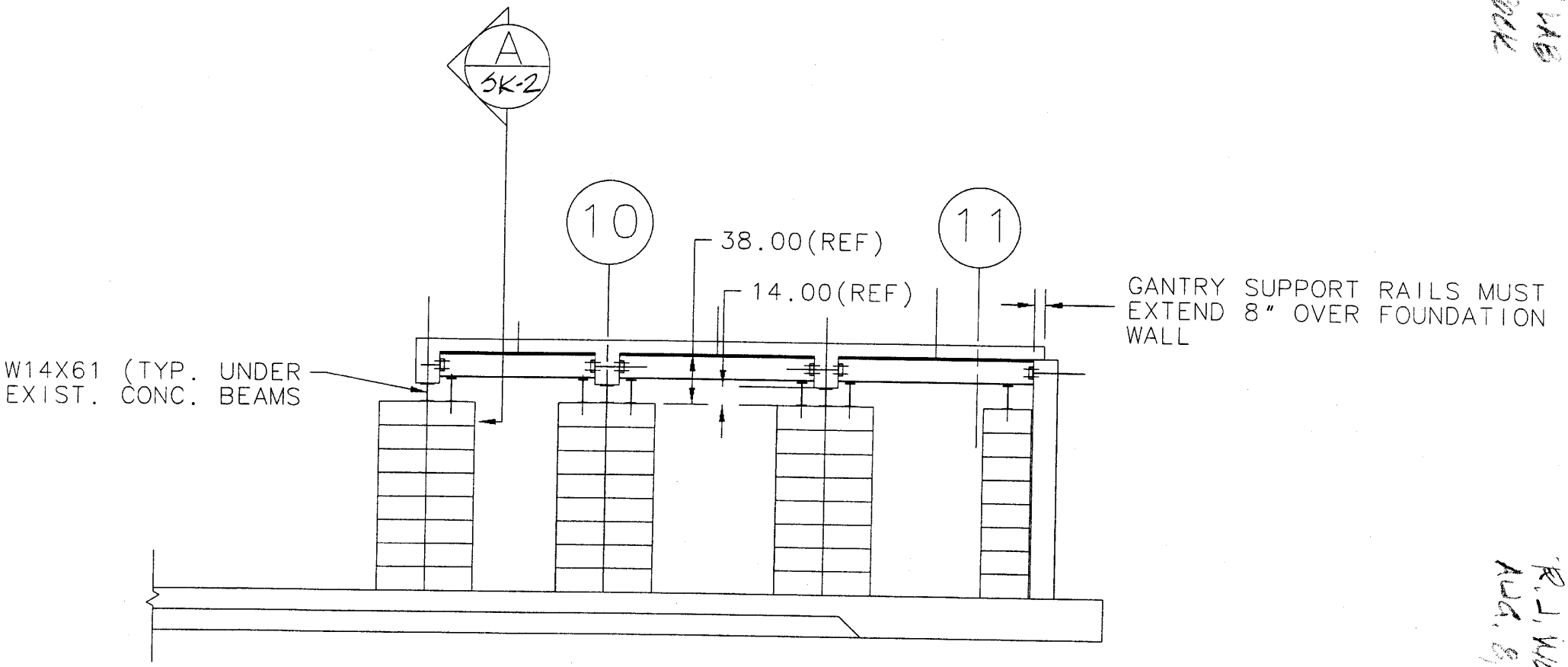

B SECTION

NEW MAIN LAB
LOADING DOCK

R. J. WOOD
AUG. 8, 2005

SR-3