Fermilab

Particle Physics Division
Mechanical Department Engineering Note

Number: MD-ENG- 089 Date: 7/10/09

Project Internal Reference:

Project: NUMI

Title: ABSORBER ENCLOSURE STAIRS & PLATFORM

Author(s): VILLEGAS

Reviewer(s):

Key Words: ——

Abstract Summary:

Applicable Codes:

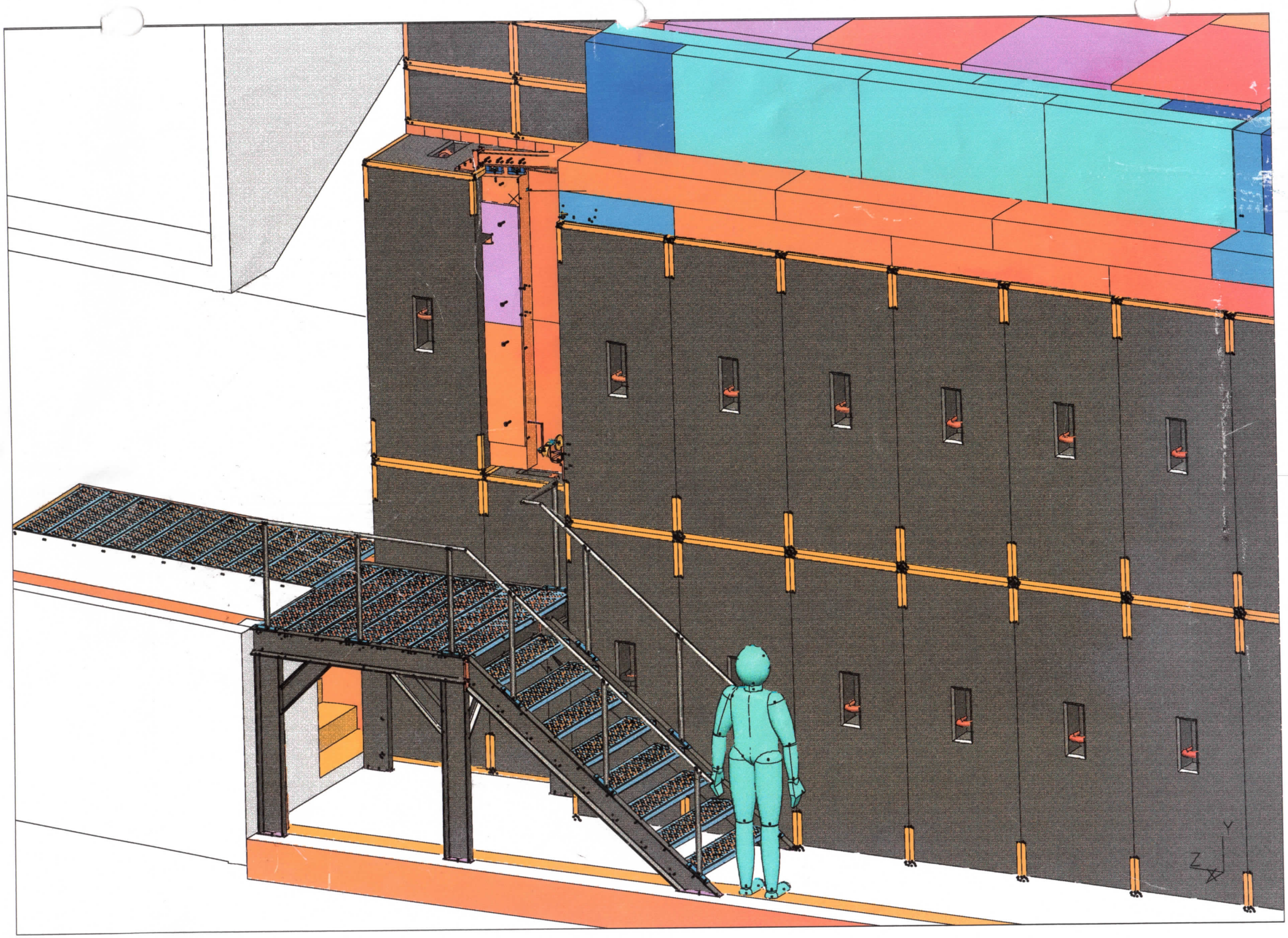
Y
Z
X

Bill of Materials for

Name: ABSORBER_ALUM_STAIRS — SK#1
Type: ASSEMBLY
Part #:
Version: 2
Revision:
Description:

Date: 07/10/2004

Qty	Name	Part #
1	STAIRS — SK#2	
1	STRINGER_WELDMENT_EAST — SK#2-1	
1	STRINGER_EAST — SK#2-1-1	
1	BAR_500x2_5x14	
1	BAR_500x2_5x10	
1	STRINGER_WELDMENT_WEST — SK#2-2	
1	STRINGER_WEST — SK#2-2-1	
1	BAR_500x2_5x14	
1	BAR_500x2_5x8	
1	STAIR_RAILING_EAST — SK#2-4	
1	ALUM_TUBE_RAILING_1_5x125x78	
1	RAILING_EXTENSION_EAST	
3	RAILING_ANGLED_VERT_POST	
3	RAILING_VERT_POST	
6	bar_375x2x8	
1	STAIR_RAILING_WEST — SK#2-5	
1	ALUM_TUBE_RAILING_1_5x125x78	
1	RAILING_EXTENSION_5_38	
3	RAILING_ANGLED_VERT_POST	
4	bar_375x2x8	
1	RAILING_VERT_POST	
1	RAILING_EXTENSION_19_75	
8	TREAD_9_5x44 — SK#2-3	
8	TREAD_ALUM_SERRATED_DIAMOND_44_LG	McNASTER-CARR_#6246T23
16	BAR_250x2x9_5	
1	PLATFORM — SK#3	
1	PLATFORM_WELDMENT — SK#3-1	
1	STRINGER_EXTENSION_EAST — SK#3-1-1 (2 SHEETS)	
4	BAR_500x2.5x9	
4	PLATFORM_VERTICAL_SUPPORT	
1	STRINGER_EXTENSION_WEST — SK#3-1-2	
1	ALUM_CHANNEL_6x4_5x63	
1	ALUM_CHANNEL_6x4_5x54	
1	ALUM_CHANNEL_6x4_5x67	
2	ALUM_CHANNEL_6x4_5x65	
2	ALUM_COPED_CHANNEL_6x4_5x17_5	
1	ALUM_CHANNEL_6x4_5x18	
2	ALUM_COPED_CHANNEL_6x4_5x8_5	
7	ALUM_CHANNEL_GUSSET	
7	GRATED_PLANK_9_5x63 — SK#3-2	
7	TREAD_ALUM_SERRATED_DIAMOND_63_LG	McMASTER-CARR_#6246T23
14	BAR_250x2x9_5	

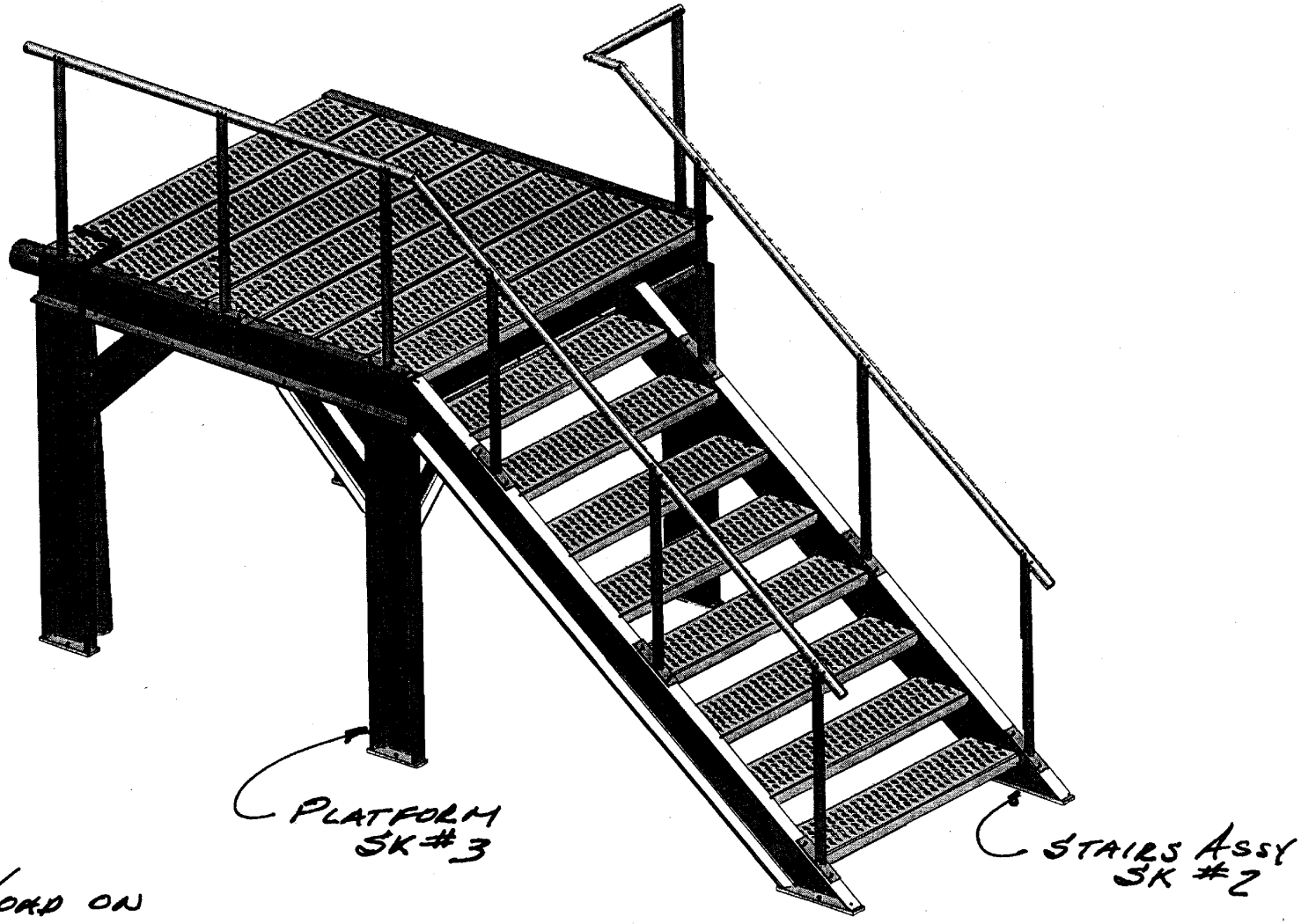

NOTE:
ALLOWABLE LOAD ON PLATFORM DECK IS 6 #/IN² WITH TOTAL NOT TO EXCEED 9,500 # UNIFORM LOAD. (SEE SKETCH 1a

ABSORBER ALUM STAIRS
SKETCH #1

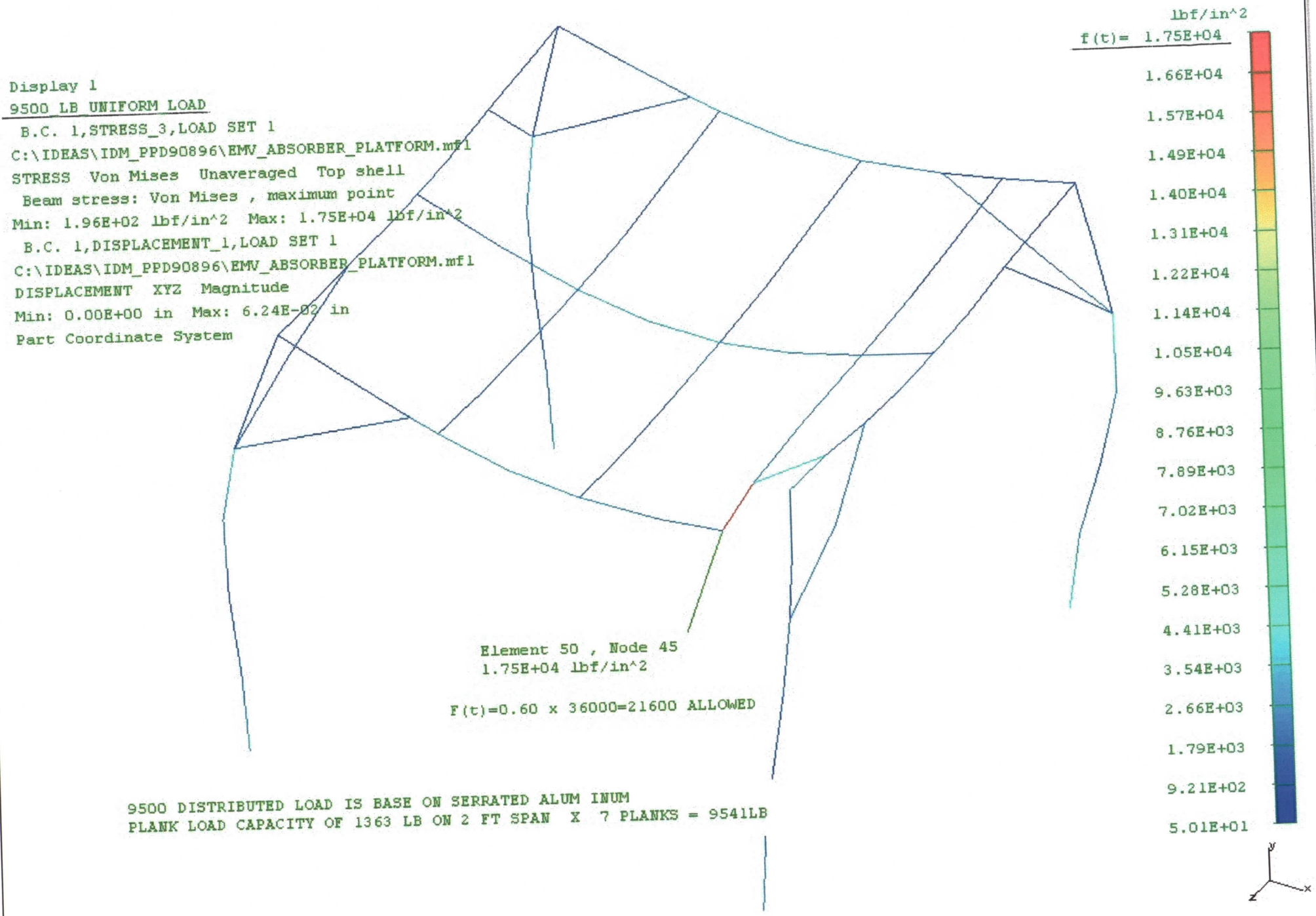
Display 1
9500 LB UNIFORM LOAD
B.C. 1,STRESS_3,LOAD SET 1
C:\IDEAS\IDM_PPD90896\EMV_ABSORBER_PLATFORM.mf1
STRESS Von Mises Unaveraged Top shell
Beam stress: Von Mises , maximum point
Min: 1.96E+02 lbf/in^2 Max: 1.75E+04 lbf/in^2
B.C. 1,DISPLACEMENT_1,LOAD SET 1
C:\IDEAS\IDM_PPD90896\EMV_ABSORBER_PLATFORM.mf1
DISPLACEMENT XYZ Magnitude
Min: 0.00E+00 in Max: 6.24E-02 in
Part Coordinate System
lbf/in^2
f(t)= 1.75E+04
1.66E+04
1.57E+04
1.49E+04
1.40E+04
1.31E+04
1.22E+04
1.14E+04
1.05E+04
9.63E+03
8.76E+03
7.89E+03
7.02E+03
6.15E+03
5.28E+03
4.41E+03
3.54E+03
2.66E+03
1.79E+03
9.21E+02
5.01E+01
Element 50 , Node 45
1.75E+04 lbf/in^2
F(t)=0.60 x 36000=21600 ALLOWED
9500 DISTRIBUTED LOAD IS BASE ON SERRATED ALUM INUM
PLANK LOAD CAPACITY OF 1363 LB ON 2 FT SPAN X 7 PLANKS = 9541LB
y
x
z

SKETCH 1a

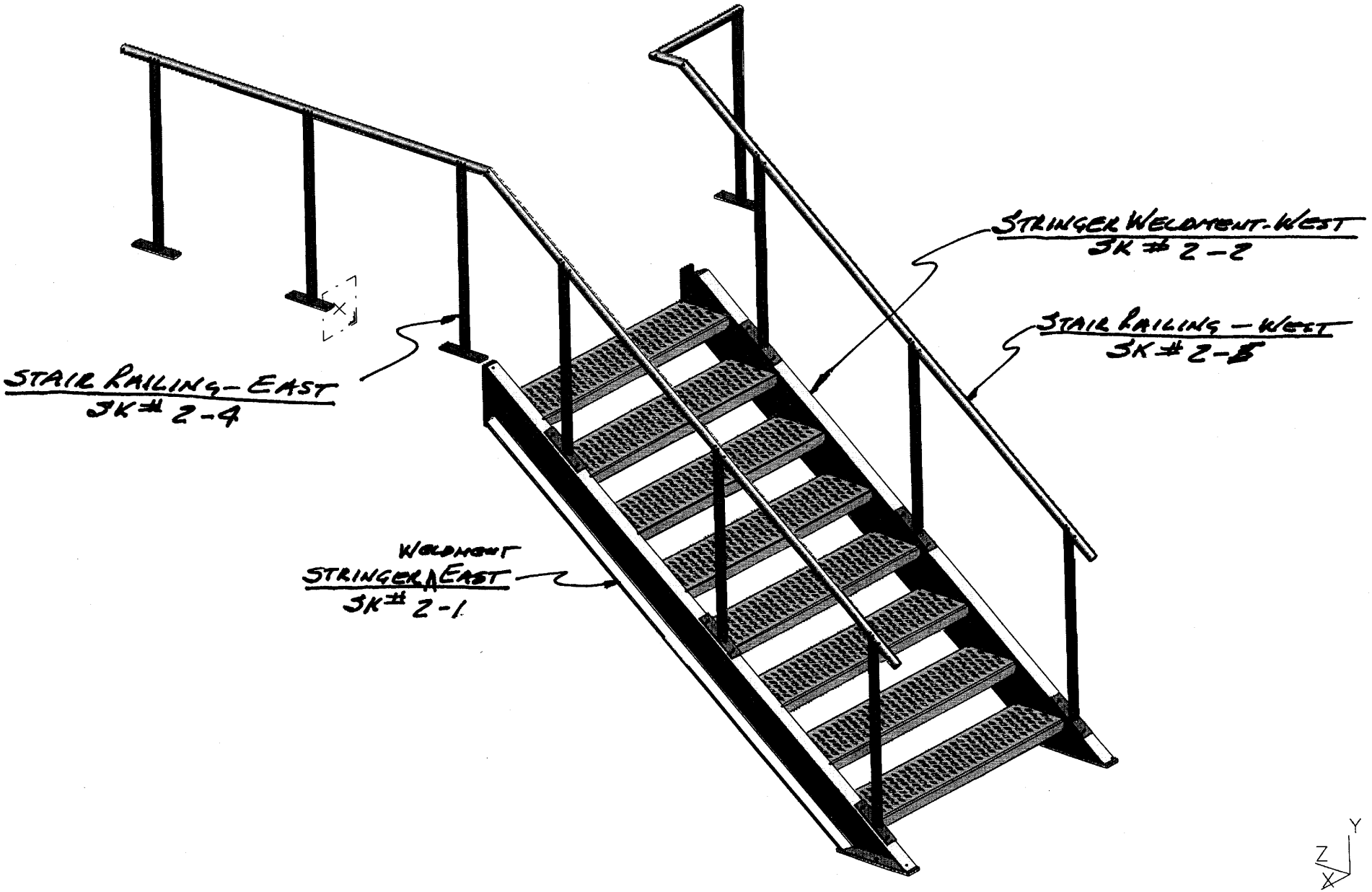

STAIRS ASSY
SKETCH # 2

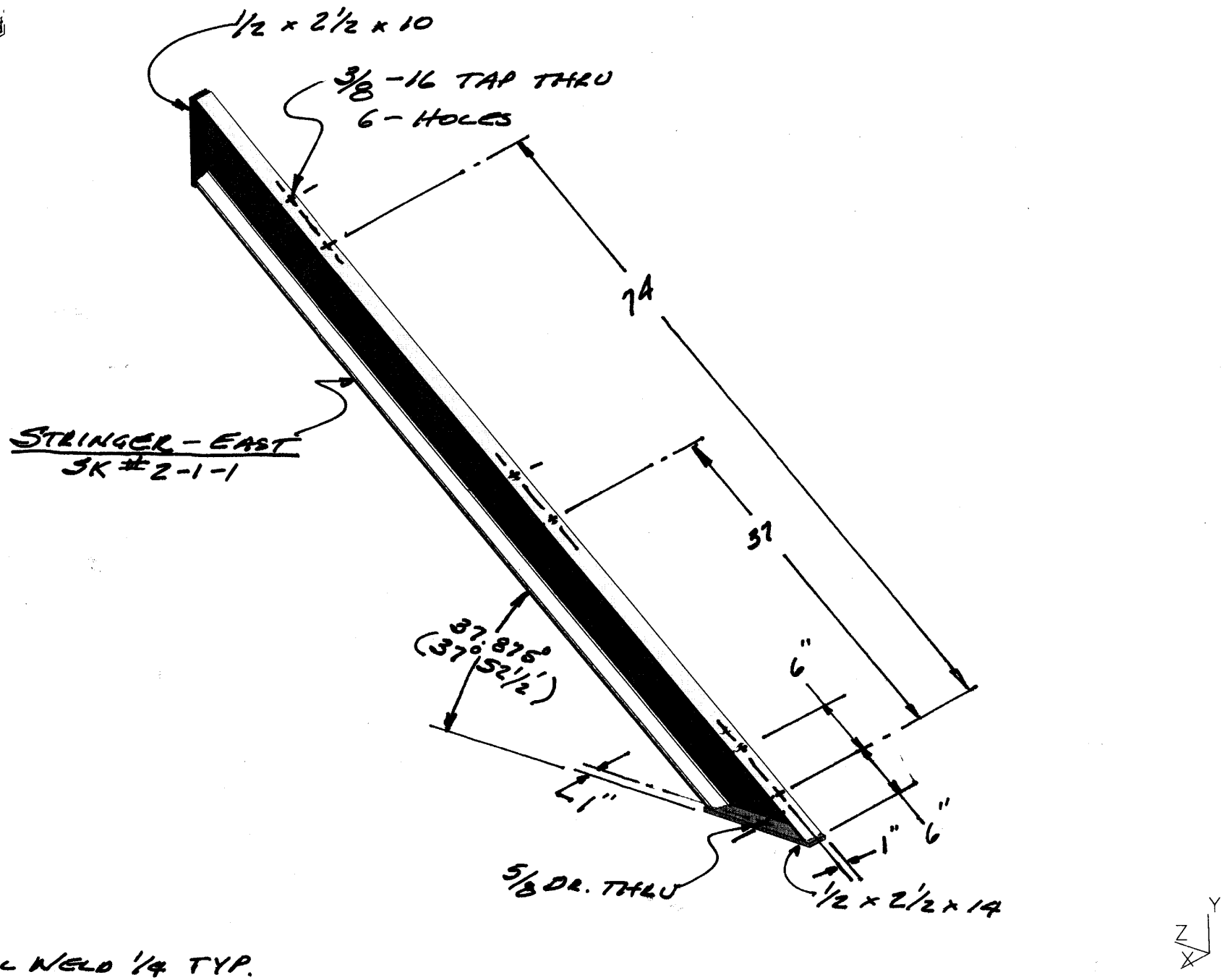

NOTE: ALL WELD 1/4 TYP.

STRINGER WELDMENT - EAST
SK # 2-1

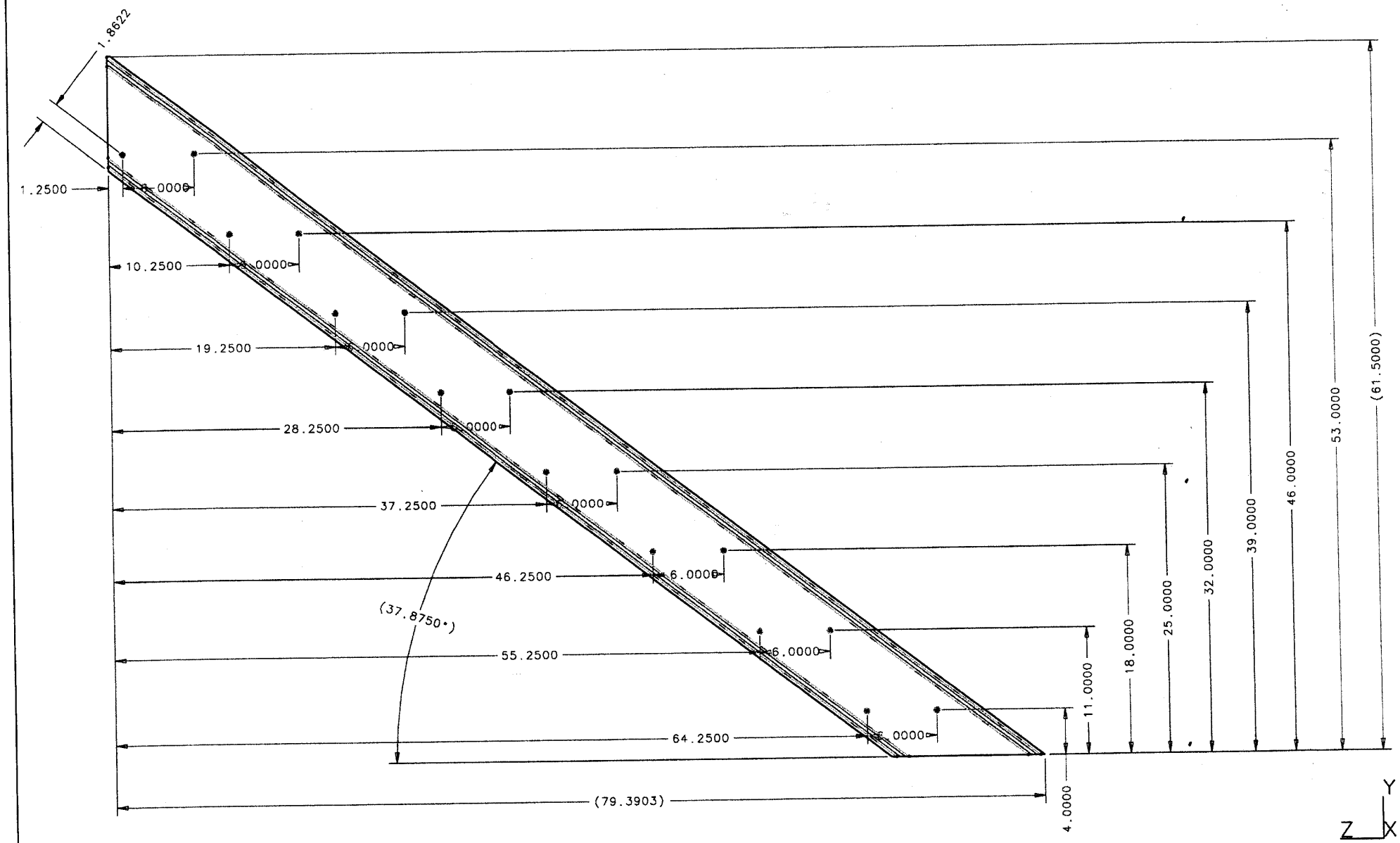

STRINGER - EAST
SK# 2-1-1

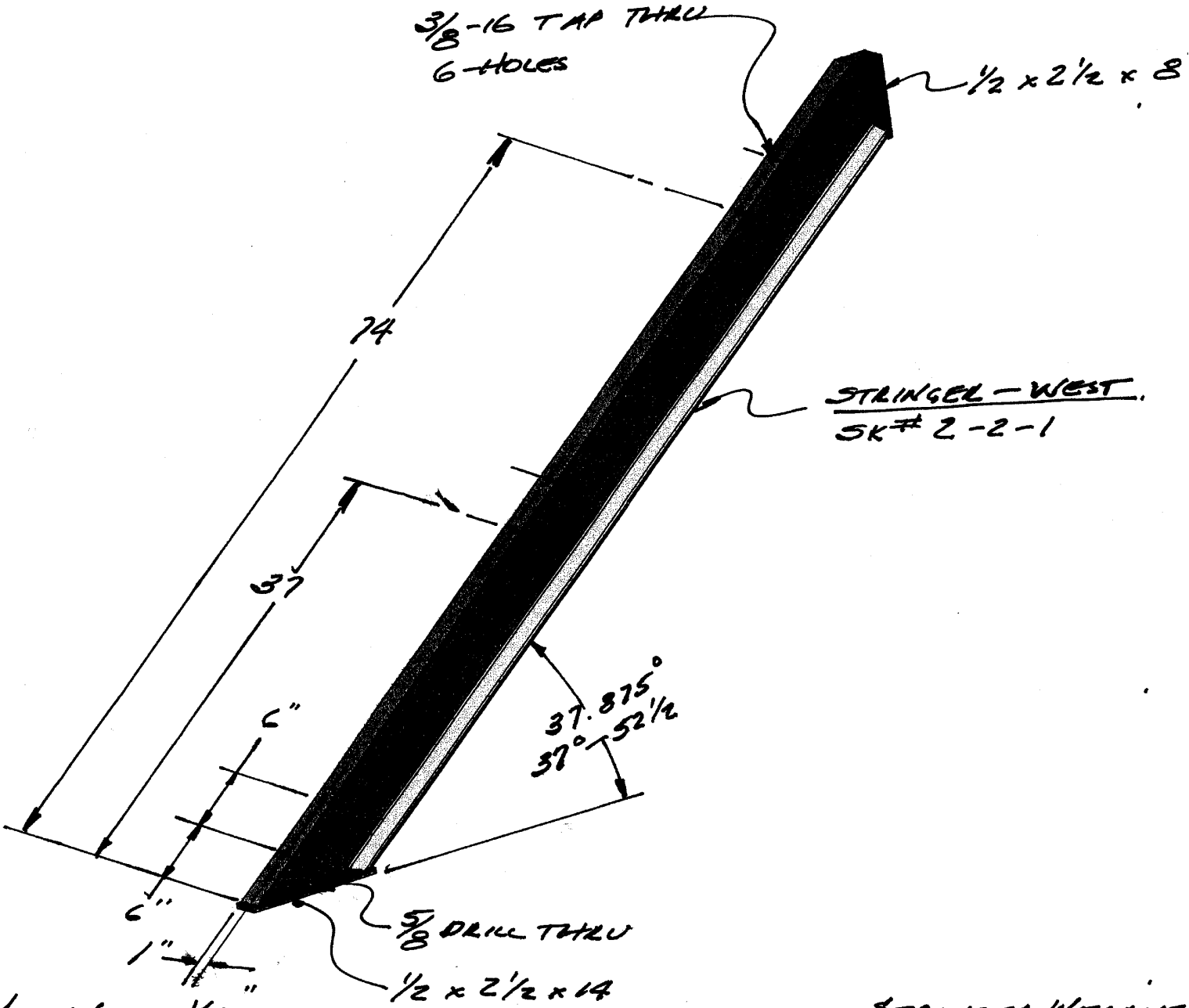

NOTE: ALL WELD 1/4

STRINGER WELDMENT-WEST
SK # 2-2

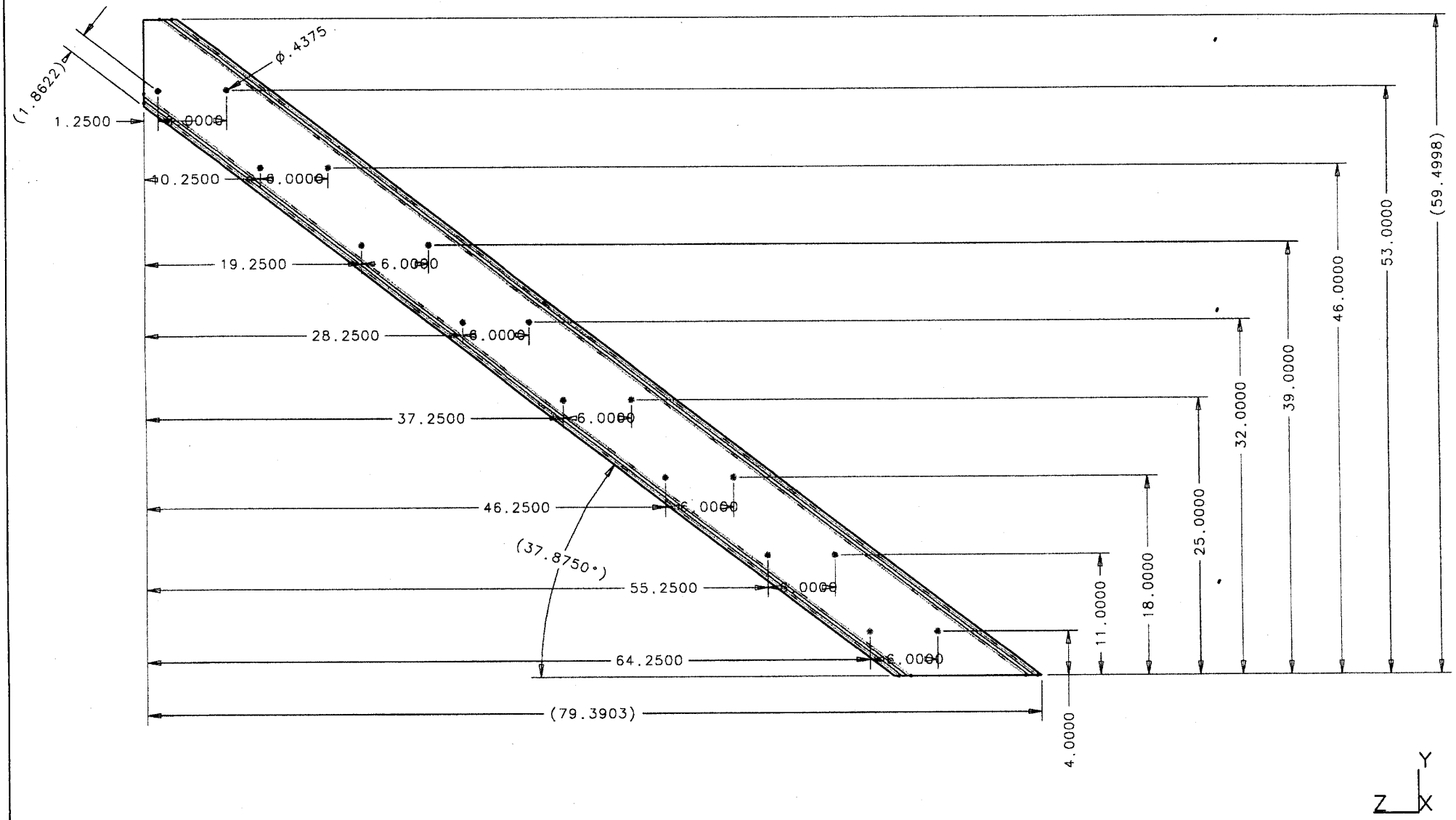

STRINGER-WEST
SK # 2-2-1

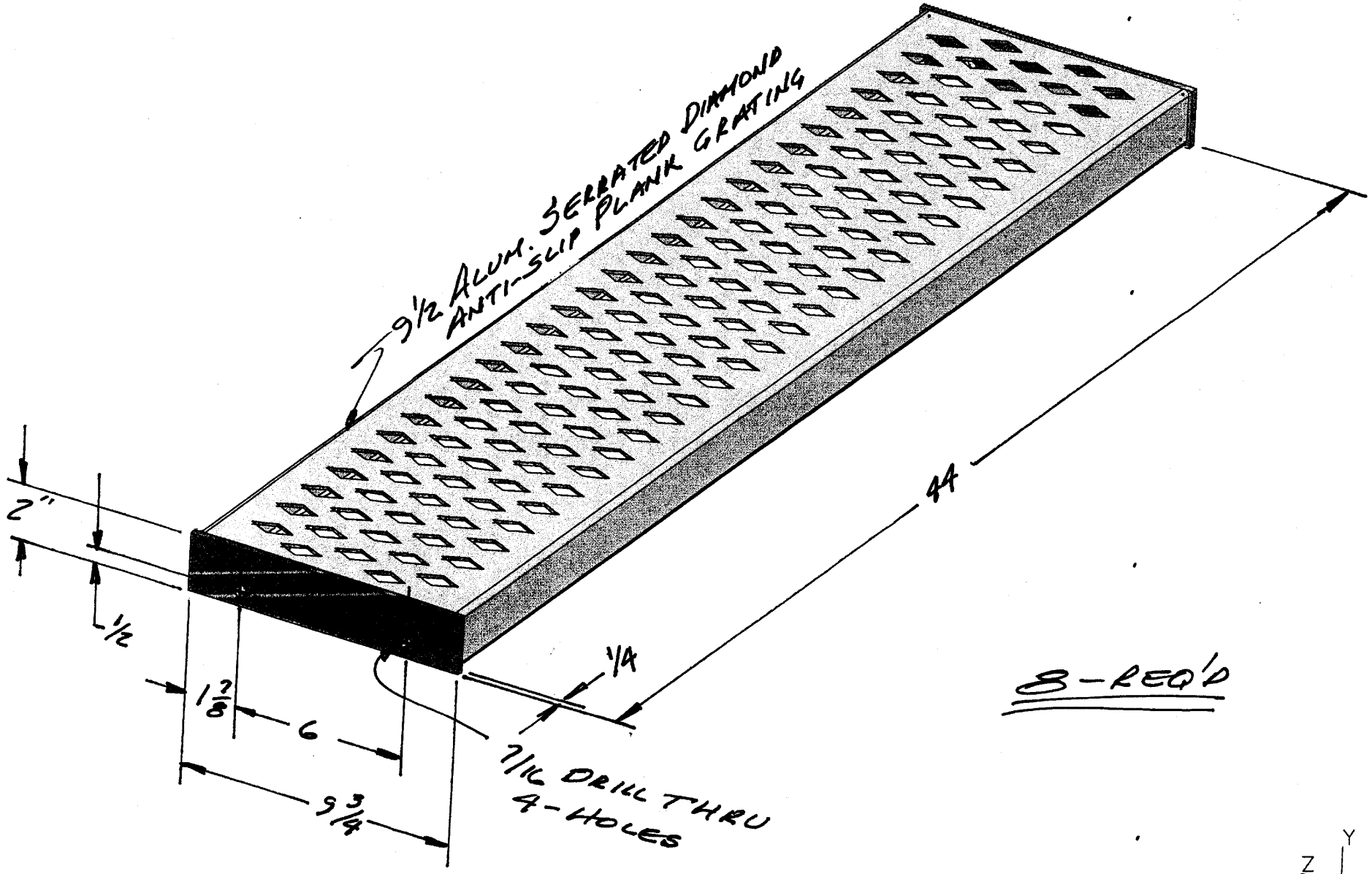

TREAD - 9½ x 44
SK# 2-3

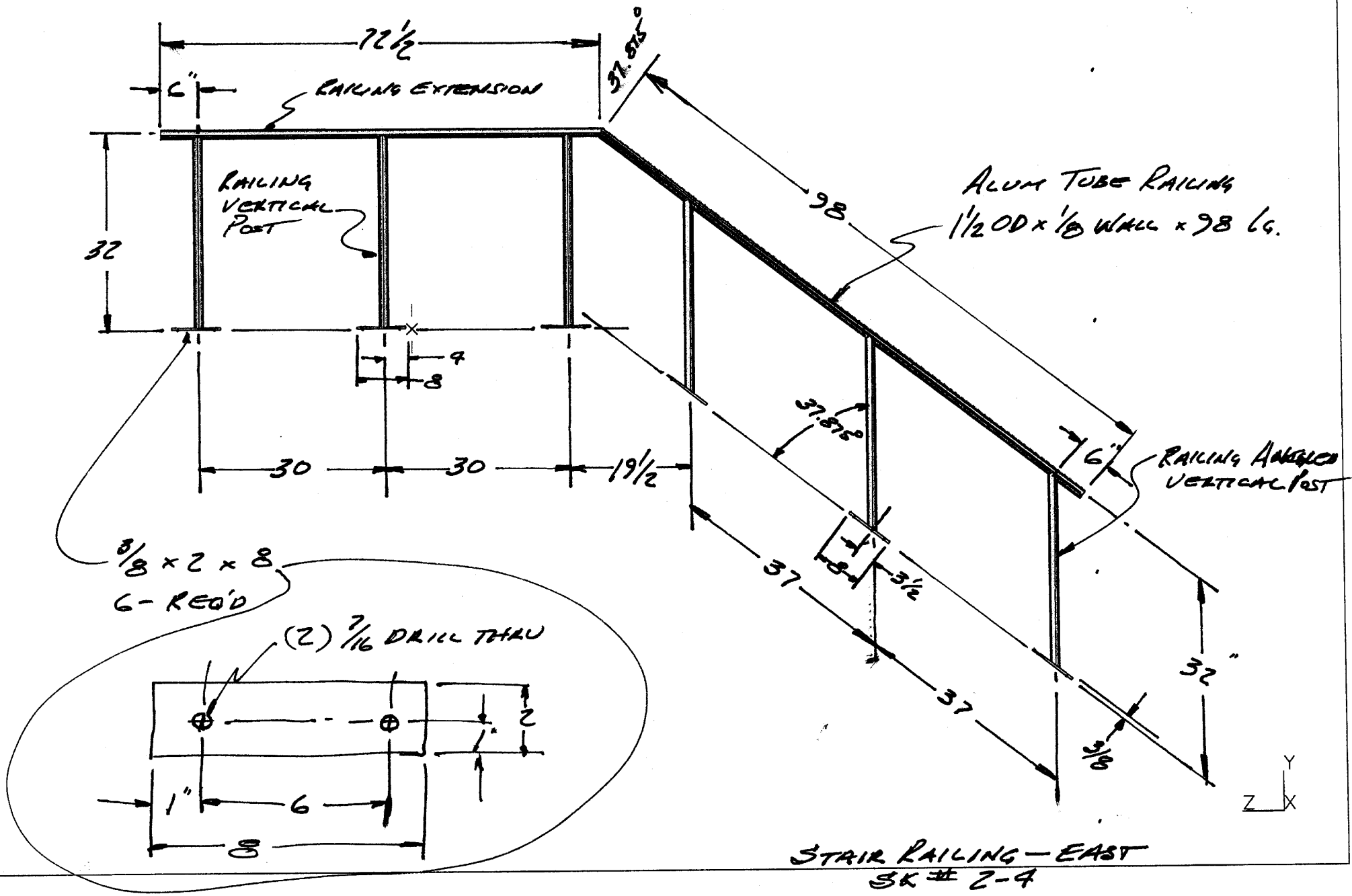

STAIR RAILING — EAST
SK # 2-4

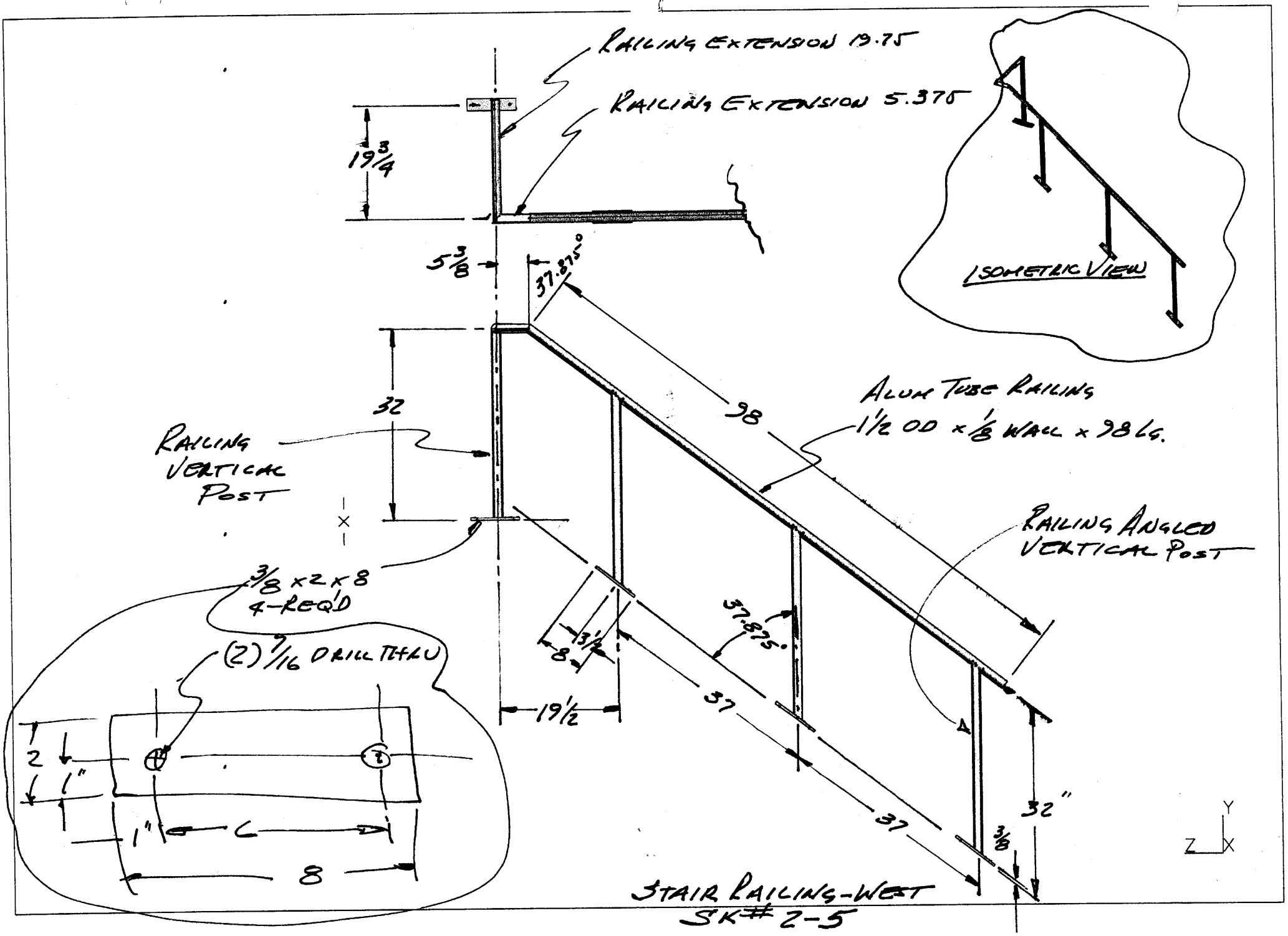

STAIR RAILING-WEST
SK# 2-5

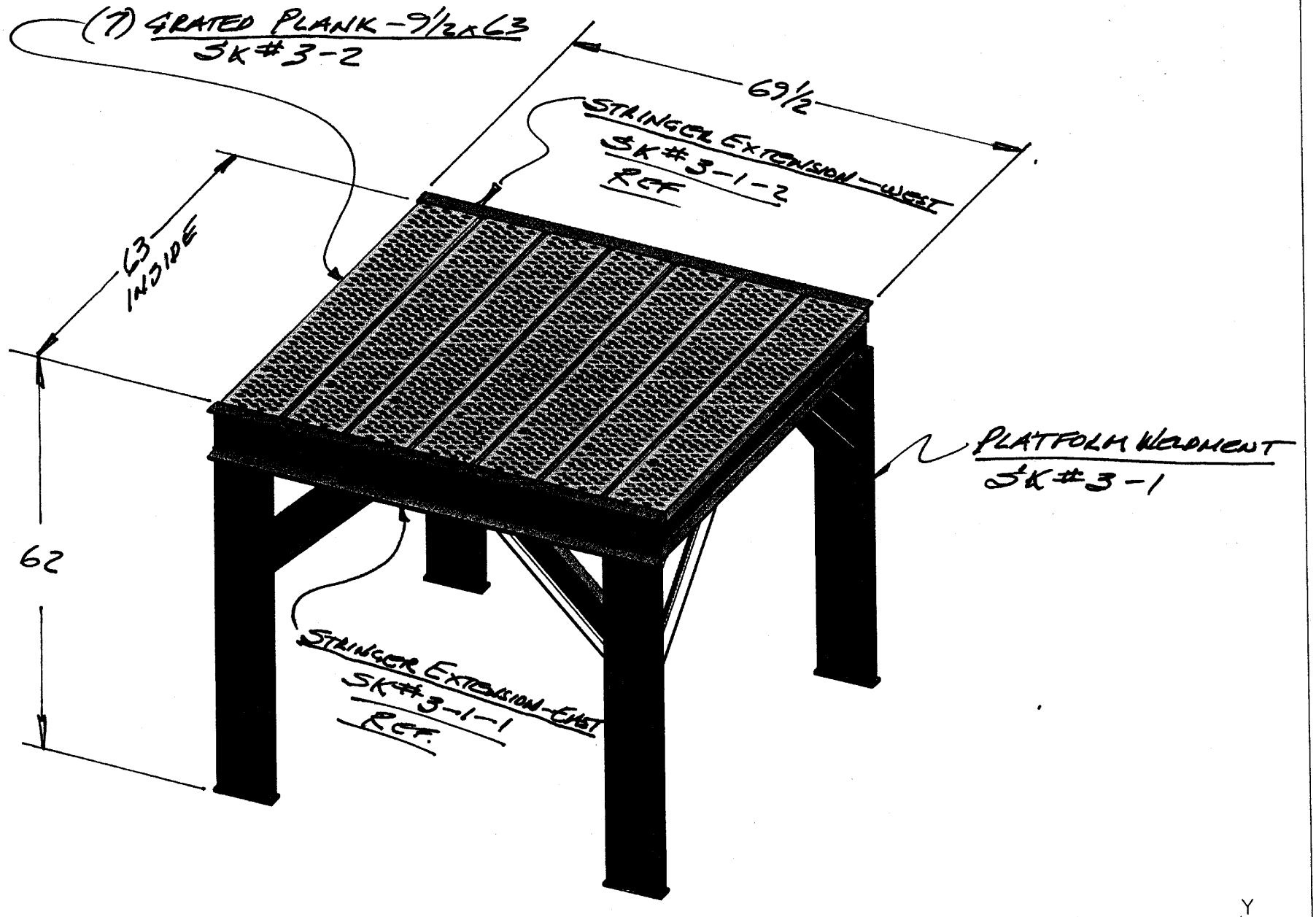

PLATFORM ASSY
SK #3

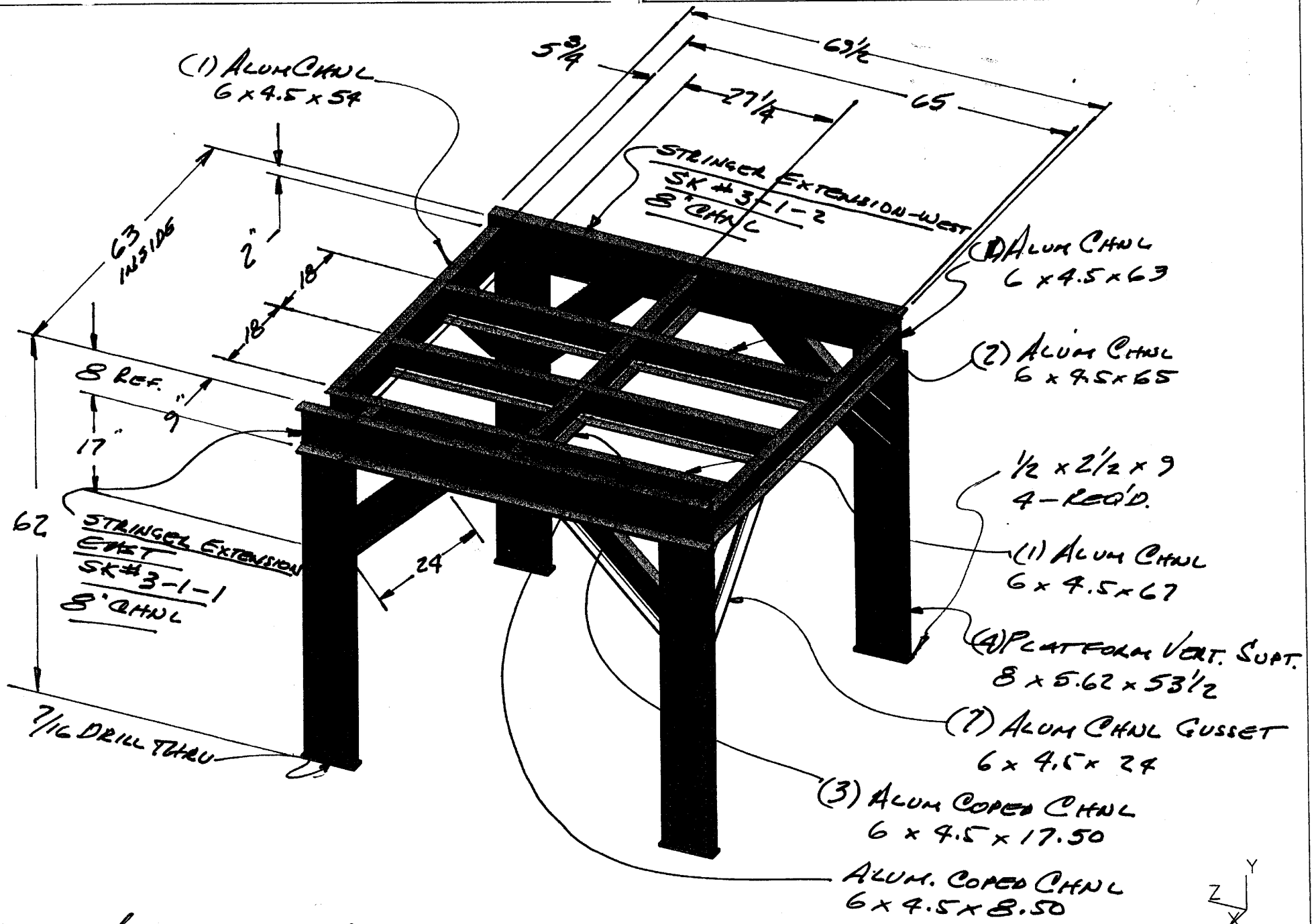

NOTE: ALL WELDS 1/4" MIN.

PLATFORM WELDMENT
SK # 3-1

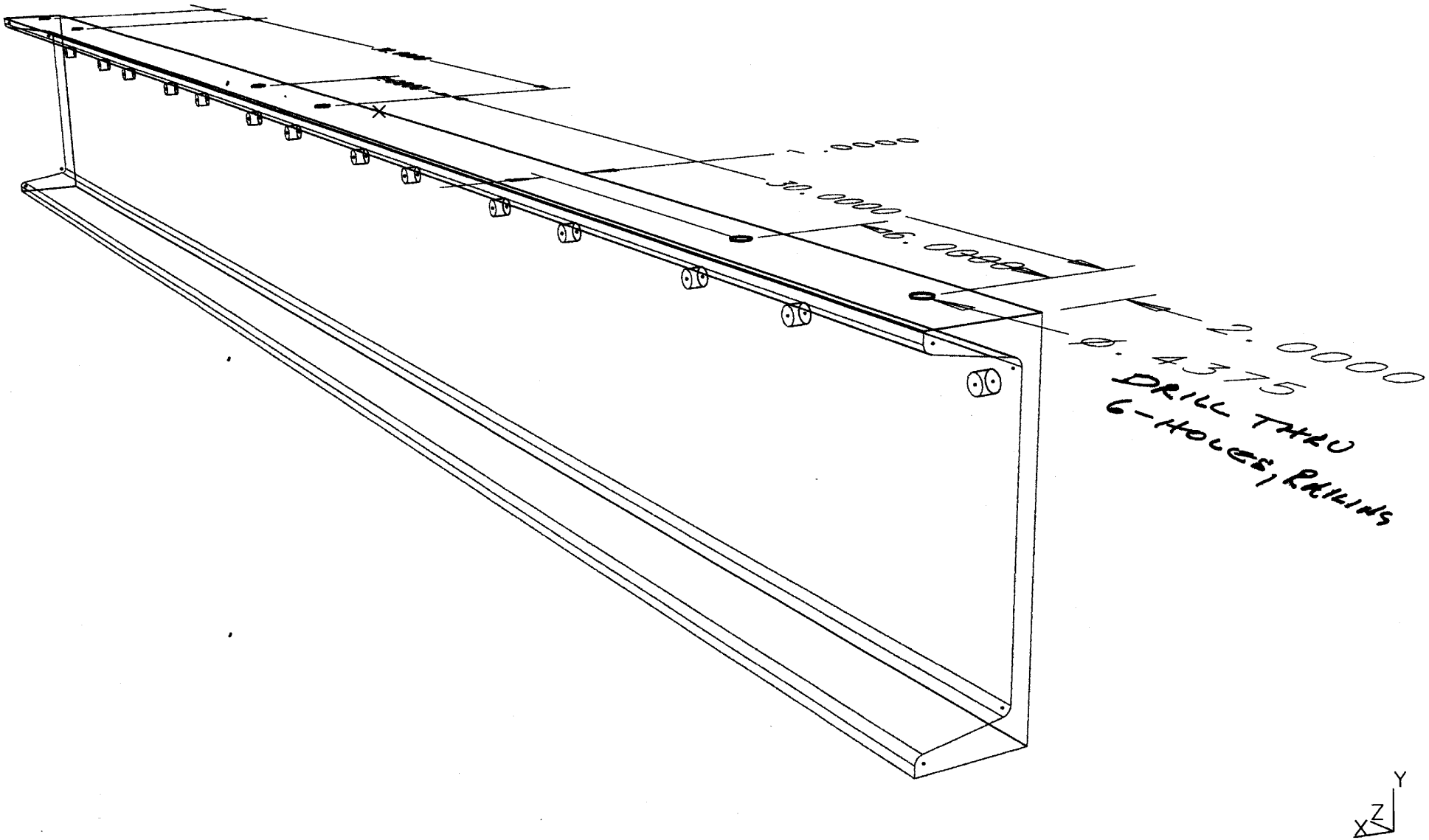

STRINGER EXTENSION-CAST
SK #3-1-1 (SHEET #2)

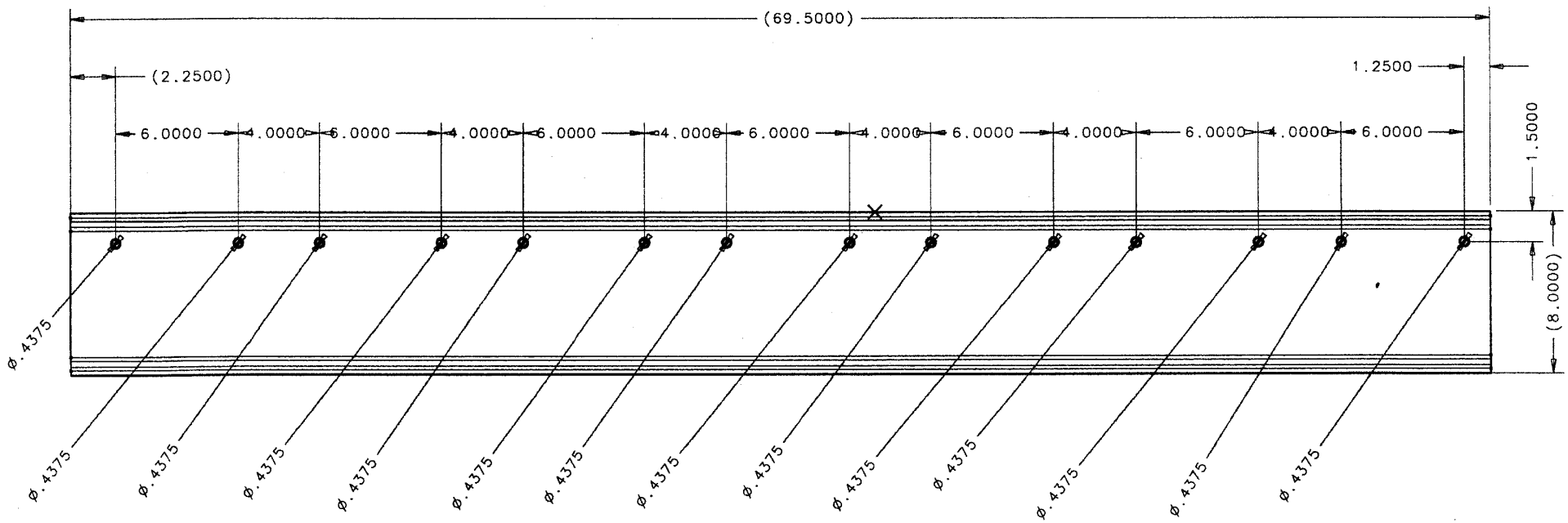

14 HOLES
TREMOS

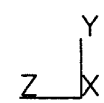

STRINGER EXTENSION - EAST
SK #3-1-1 (SHEET #1)

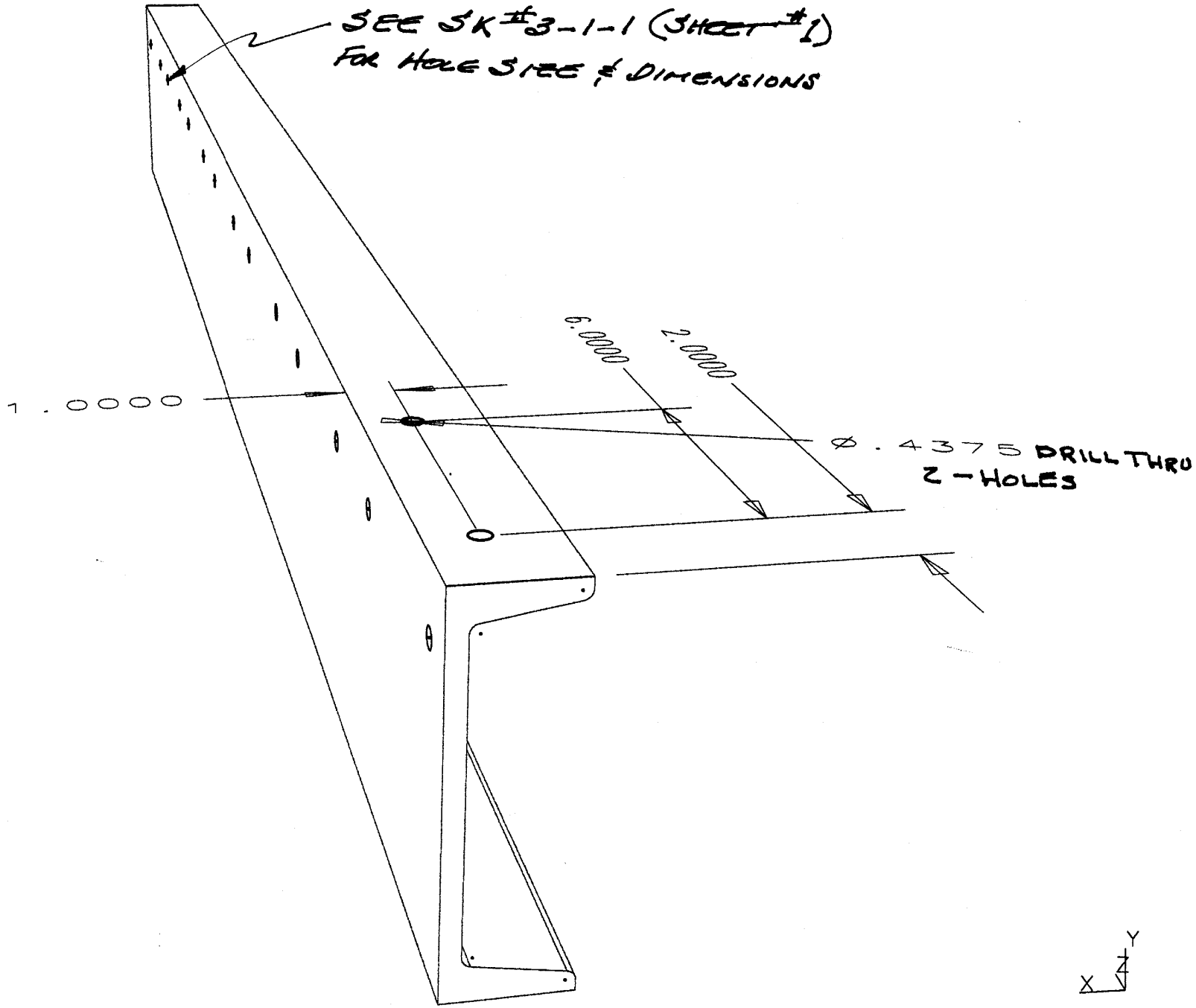

STRINGER EXTENSION - WEST
SK # 3-1-2

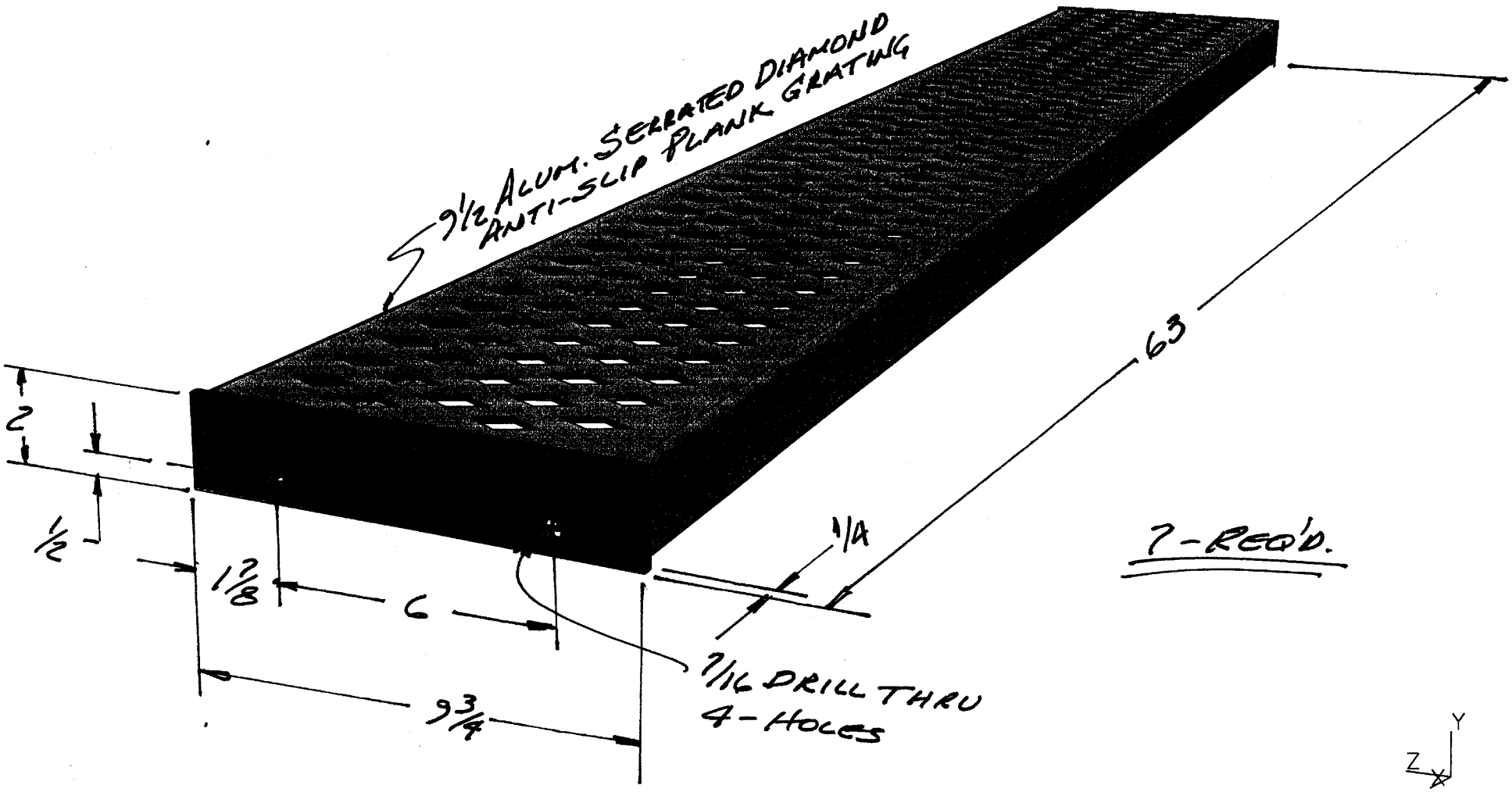

GRATED PLANK 9 1/2 x 63
SK # 3-2

FERMILAB
ENGINEERING NOTE

SECTION	PROJECT	SERIAL-CATEGORY	PAGE

SUBJECT: ABSORBER AND STAIRS & DECK

NAME:

DATE:

REVISION DATE:

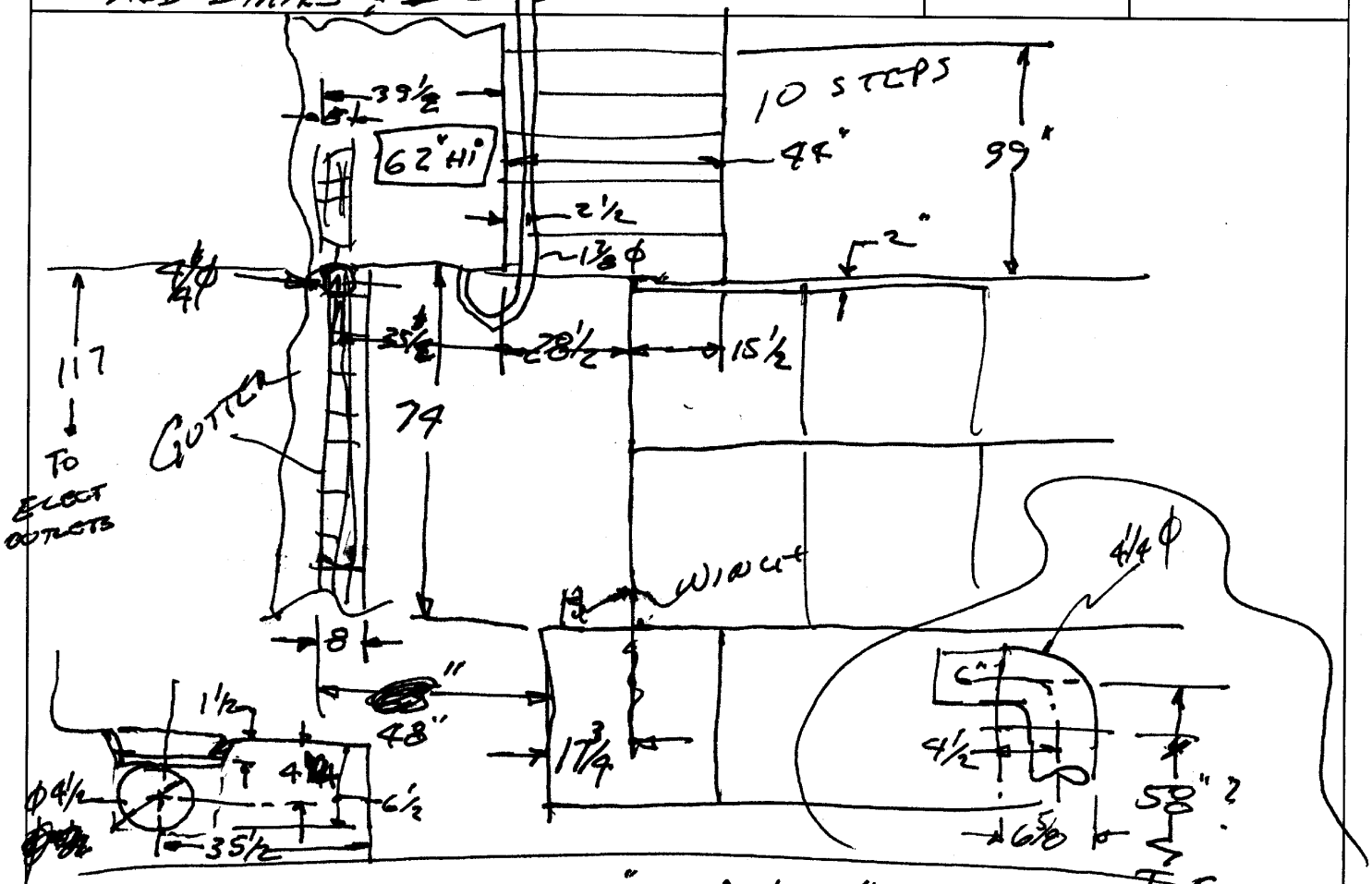

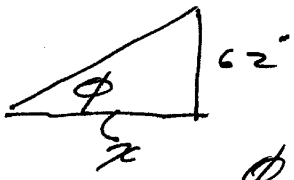

$x = 73.54"$ @ 40°-8' (8" RISE / 9½ TREAD)

$= 93.02$ @ 33°-41' (7" RISE / 10½ TREAD)

φ SHOULD BE WITHIN 30°-50°

22-

261"

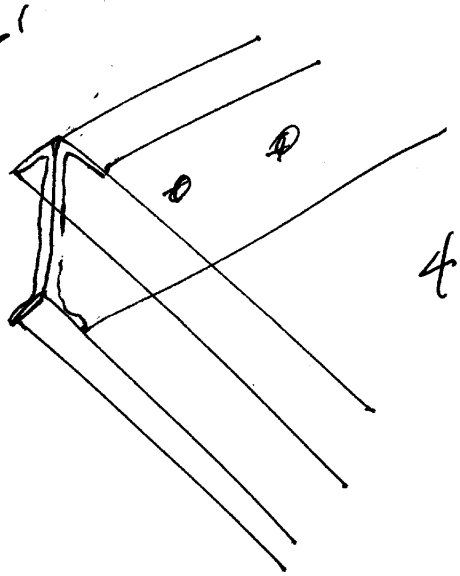

1:00 PM JEROME HUNG

42733 F

DAVE BURK

$I = .1287 \text{ IN}^4$

@ 60" QTR ⇒ $f_b = 17.5 \times 10^3$

$y = .700"$

VICTOR KEEK

FERMILAB
ENGINEERING NOTE

SECTION	PROJECT	SERIAL-CATEGORY	PAGE

SUBJECT

* MAT'L ADDED

NAME

DATE | REVISION DATE

(2) 505.50

STRINGERS

* CHANNEL, ALUM. 6061-T6,
* 8 x 2.435 x .395 x 25',
8 x 2.435 x .395 x 30' (25'+5')
* 6 x 2.157 x .438 x 22' (25'+10') — $

$10.11 FT

(B)

SEPT B

TREADS & GRATING STAIR COVER

ALUM. SERRATED DIAMOND ANTISLIP PLANK GRATING

9 1/2 INCH WIDTH, 12 FT. SPANS,

McMASTER-CARR # 6246T23 $235.58 SPAN

* 3 SPAN LENGTHS REQ'D — TOTAL $706.74 $
7 SPAN LENGTHS REQ'D — TOTAL — 1649.06

* RECT. ~~BAR FLATS~~ EXTRUDED ALUM. BAR 6061-T6

(18) 1/4 x 2 x 9 1/2 (~16' FT.) 24' 2@12' → 1.46 FT

(8) 3/8 x 2 x 8 (~6' FT) 1@12' → 2.92 FT.

(2) 1/2 x 2 1/2 x 14 (~3 FT) } 1@12' → 2.92

(2) 1/2 x 2 1/2 x 9 1/2 (3 FT)

(2) 1/2 x 2 1/2 x 9 (3 FT)

* ALUM. TUBE 6061-T6 1 1/2 OD x 1/8 WALL x 60 FT NEED 40 1/2

5 PCS @ 12'

3.17 FT

* ALUM. ANGLE 6061-T6
3 x 3 x 3/8 x 20 FT $4.45 FT.

FERMILAB
ENGINEERING NOTE

SECTION	PROJECT	SERIAL-CATEGORY	PAGE

SUBJECT: ABSORBER HADRON MONITOR DECK SPLIT IN HALF AND BOLTED

NAME: E M Villegas

DATE: 10/28/04

REVISION DATE:

5746

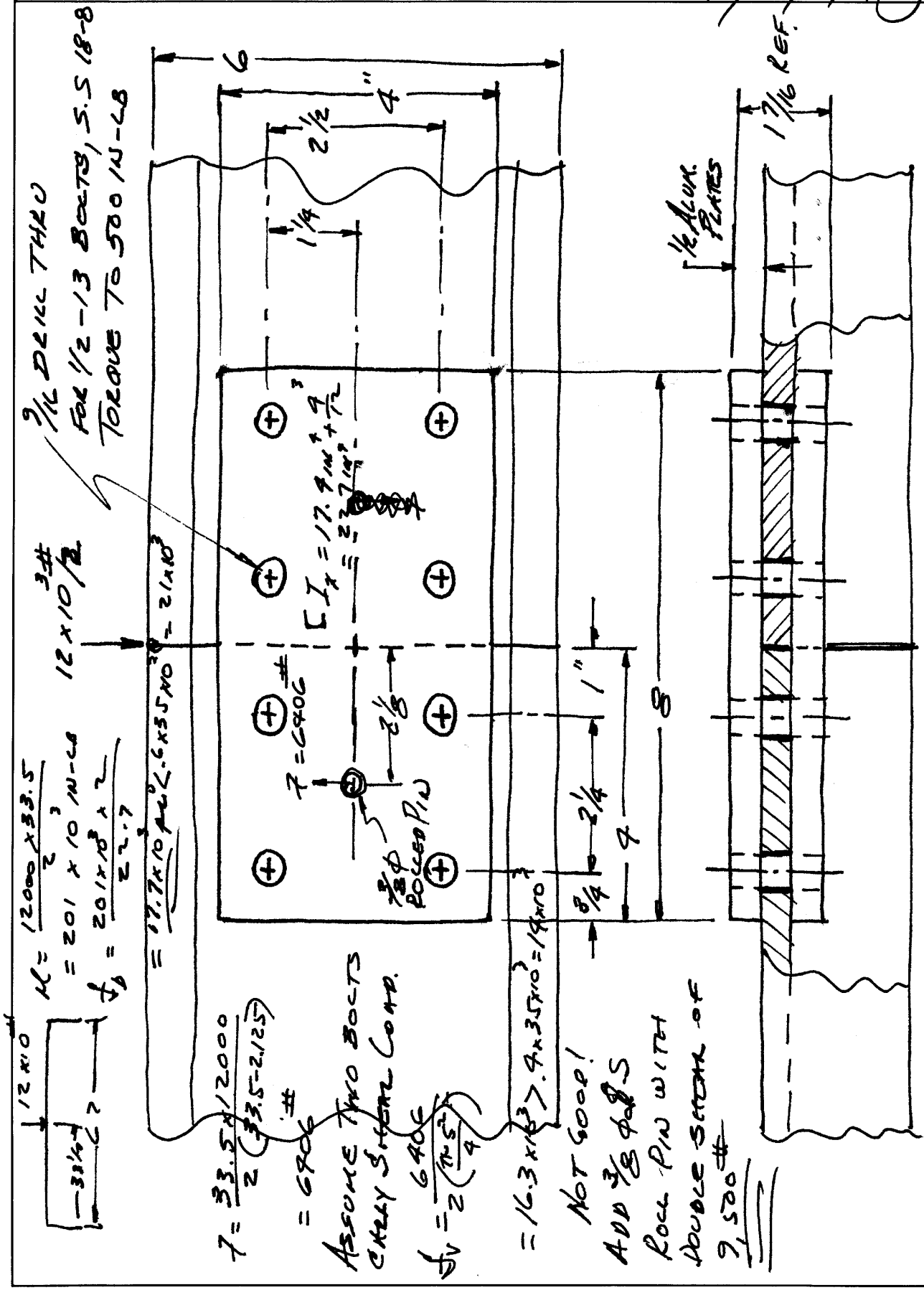

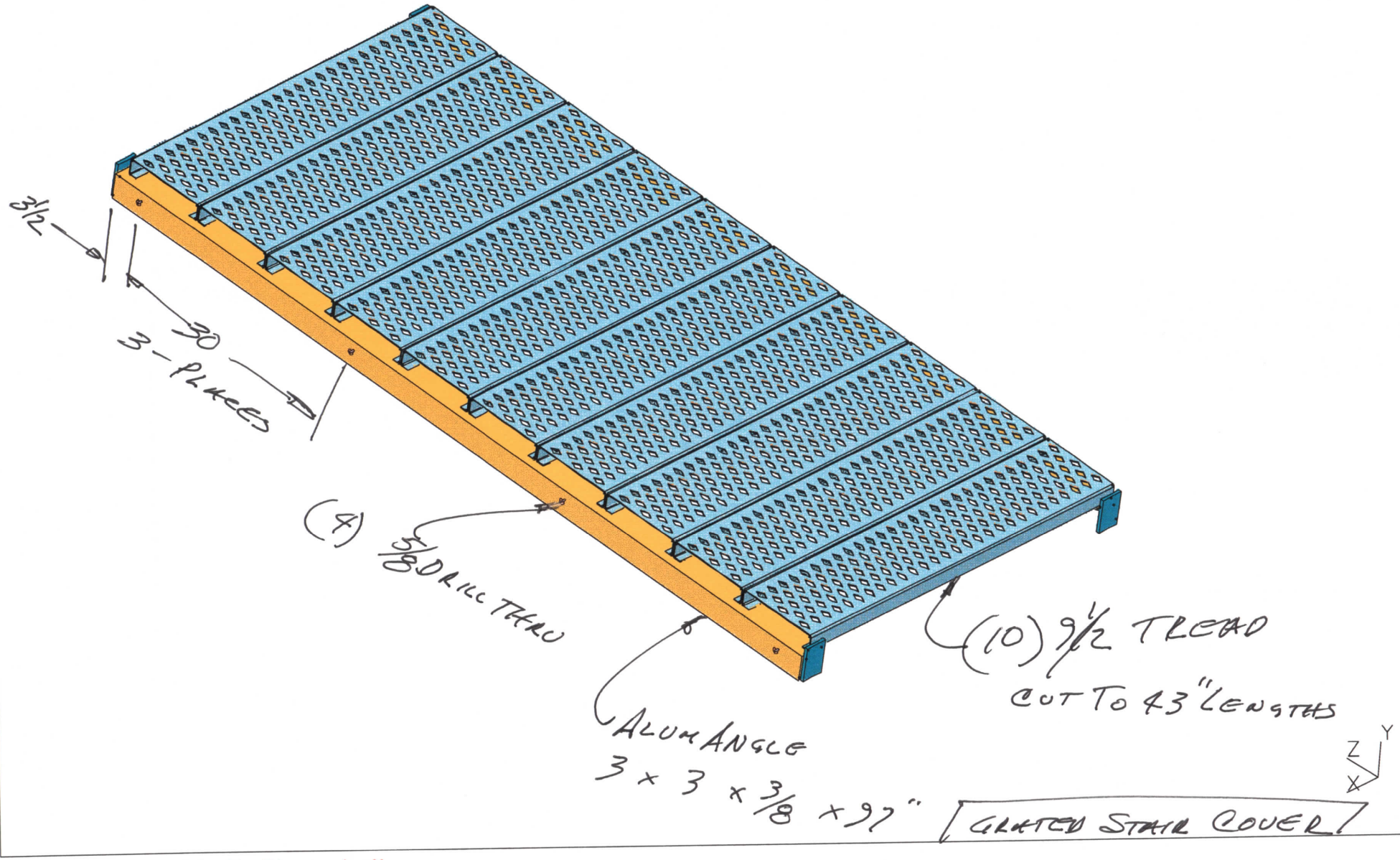

Plotted by villegas on 03-Sep-04 , File: generic.pff

Stair Treads & Plank Grating

Fiberglass (FRP) Stair Treads

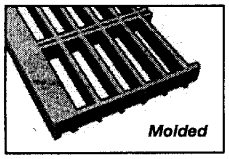

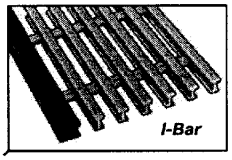

Lightweight, fiberglass reinforced plastic (FRP) treads are strong, nonconductive, and offer excellent corrosion resistance. They have a high traction, grit impregnated nose plate. Treads are OSHA compliant. For indoor and outdoor use.

Molded Stair Tread—Has cutting channels every 6" that let you trim the treads for a custom fit. Use a resin sealer (sold separately) to protect cut ends. Tread has 1½"×6" openings to keep liquids and debris from accumulating. Color is green.

I-Bar Stair Treads—Have a stiffer and lower profile than molded stair treads. Treads are yellow with a dark gray, double I-bar nose.

Resin Sealer—Protects cut ends from absorbing water or chemicals and fraying. Furnished in a 1-qt. can.

6253T97 ..... **Each** $51.50

Bearing Bar Ht.	Material Thick.	Stair Dp.	24" Length	Each	30" Length	Each	36" Length	Each
Molded Stair Treads								
1½"	¼"	10½"	**69845T65**	$82.50	**69845T66**	$103.13	**69845T67**	$137.50
I-Bar Stair Treads								
1"	⅛"★	10½"	**6128T51**	50.52	**6128T52**	63.28	**6128T53**	75.78
1½"	⅛"★	10½"	**6128T55**	55.21	**6128T56**	69.01	**6128T57**	82.81

★ Measured at the thinnest part of the I-bar web.

About Plank Grating

Plank grating is often used for platforms, stair treads, work stands, decks, and ramps. Although it has a lower overall load rating than bar grating, it's more economical and easier to cut to size. Plank grating is lightweight and has drainage openings to help prevent build-up of debris. For plank grating fasteners, see page 1923.

The *uniform load rating* is the maximum evenly distributed load that the grating can support per square foot for a given unsupported span. In general, as the width of the plank grating increases, the uniform load rating decreases. Spans listed may vary as much as 1".

Additional Information: *For additional information about the products below, including load ratings and deflection, go to our web site, www.mcmaster.com, and search for the number specified in the presentations below (for example, **6855TAC**), or fax us at 630-782-3800 and request the number specified.*

Serrated Diamond Antislip Plank Grating

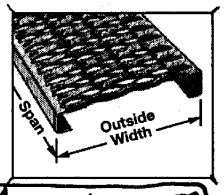

Grating has an abrasive, slip resistant surface. We offer grating made of corrosion resistant galvanized steel, rustproof aluminum, and Type 304 stainless steel. Galvanized steel is tested to and meets Fed. Spec. RR-G-1602. Standard spans are 10 and 12 ft. **Also Available:** 2-ft., 3-ft., 4-ft., 5-ft., 6-ft., and 8-ft. spans at higher prices due to cutting costs.

To Order: Please specify span. **Additional Information:** ***6855TAC (See above for details)***

Channel Height	Ga.	4-3/4" Width: Uniform Load Rating, 3-ft. Span		Per Ft.	7" Width: Uniform Load Rating, 3-ft. Span		Per Ft.	9-1/2" Width: Uniform Load Rating, 3-ft. Span		Per Ft.
Galvanized Steel										
1½"	14	591 lbs.	**6855T14**	$3.82	402 lbs.	**6855T15**	$4.45	296 lbs.	**6855T16**	$4.89
1½"	12	782 lbs.	**6855T31**	4.57	532 lbs.	**6855T32**	5.71	405 lbs.	**6855T33**	6.41
2"	14	980 lbs.	**6855T19**	4.13	665 lbs.	**6855T21**	4.71	491 lbs.	**6855T22**	5.13
2"	12	1245 lbs.	**6855T36**	5.25	846 lbs.	**6855T37**	6.05	624 lbs.	**6855T38**	6.71
3"	12	—	—	—	1597 lbs.	**6855T48**	6.89	1177 lbs.	**6855T49**	7.55
Aluminum										
2"	10	844 lbs.	**6246T41**	14.27	704 lbs.	**6246T22**	15.18	605 lbs.	**6246T23**	16.09
Type 304 Stainless Steel										
2"	16	611 lbs.	**6247T43**	20.11	450 lbs.	**6247T34**	21.79	~~330 lbs.~~	~~**6247T11**~~	23.02
		11-3/4" Width			**18-3/4" Width**			**24" Width**		
Galvanized Steel										
1½"	14	240 lbs.	**6855T17**	5.43	151 lbs.	**6855T18**	7.45	—	—	—
1½"	12	318 lbs.	**6855T34**	7.14	201 lbs.	**6855T35**	9.96	—	—	—
2"	14	397 lbs.	**6855T23**	5.71	250 lbs.	**6855T24**	7.66	228 lbs.	**6855T61**	9.41
2"	12	505 lbs.	**6855T41**	7.45	318 lbs.	**6855T42**	10.41	289 lbs.	**6855T62**	12.59
3"	12	952 lbs.	**6855T51**	8.38	598 lbs.	**6855T52**	11.13	475 lbs.	**6855T63**	13.34
Aluminum										
2"	10	552 lbs.	**6246T24**	17.84	229 lbs.	**6246T35**	24.23	—	—	—
Type 304 Stainless Steel										
2"	16	296 lbs.	**6247T12**	24.56	—	—	—	—	—	—

GRATING REQUIREMENTS
(10) 9½ WIDE × 48' LONG
ORDER #6246T23
7 (4) 12' LENGTHS
#235 58
$942.32
TOTAL FOR STAIR COVER

Open Surface Antislip Plank Grating

STAIR TREAD

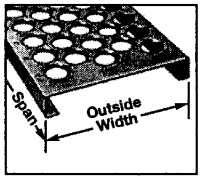

Raised projections provide excellent traction but are less abrasive than serrated grating, while the 1⅜" dia. drainage holes prevent debris buildup and let light pass through. Grating is made of galvanized steel. Meets Fed. Spec. RR-G-1602.

To Order: Please specify 10- or 12-ft. span. **Additional Information:** ***64935TAC (See above for details)***

Channel Height	Ga.	5" Width: Uniform Load Rating, 3-ft. Span		Per Ft.	7" Width: Uniform Load Rating, 3-ft. Span		Per Ft.	10" Width: Uniform Load Rating, 3-ft. Span		Per Ft.
1½"	13	990 lbs.	**64935T81**	$5.32	818 lbs.	**64935T83**	$5.80	672 lbs.	**64935T85**	$6.55
2"	13	1416 lbs.	**64935T82**	5.33	1018 lbs.	**64935T84**	5.83	740 lbs.	**64935T86**	6.58
		12" Width			**18" Width**					
1½"	13	527 lbs.	**64935T87**	6.70	300 lbs.	**64935T89**	9.13	—	—	—
2"	13	615 lbs.	**64935T88**	6.76	276 lbs.	**64935T91**	9.19	—	—	—

Slotted Plank Grating

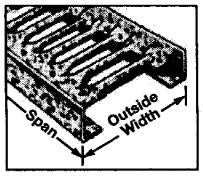

A smooth surface lets you slide heavy containers across this grating without splintering or damage. It can also be used as a storage shelf rack. Standard spans are 10 and 12 ft. **Also Available:** 2-ft., 3-ft., 4-ft., 5-ft., 6-ft., and 8-ft. spans at higher prices due to cutting costs.

To Order: Please specify span. **Additional Information:** ***6800TAC (See above for details)***

Channel Height	Ga.	5-7/8" Width: Uniform Load Rating, 3-ft. Span		Per Ft.	8-7/8" Width: Uniform Load Rating, 3-ft. Span		Per Ft.	11-7/8" Width: Uniform Load Rating, 3-ft. Span		Per Ft.
1⅝"	14	602 lbs.	**6800T11**	$6.75	396 lbs.	**6800T12**	$8.26	294 lbs.	**6800T13**	$9.61

Serrated Diamond Antislip Plank Grating—Load and Deflection Table (Cont.)

1363# X 7 SPANS = 9,541#

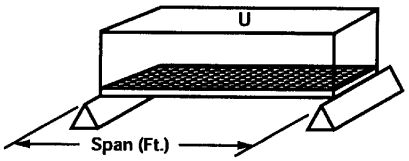

Uniform Load

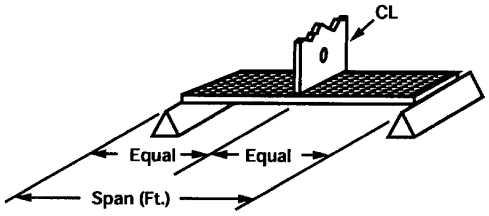

Concentrated Line Load

(U)—Uniform load (lbs./sq. ft.), *(UD)*—Uniform load deflection, *(CL)*—Concentrated line load (lbs.), *(CLD)*—Concentrated line load deflection, *Span*—The amount of space between supports

Aluminum													
		Height	Gauge		2-ft. Span	3-ft. Span	4-ft. Span	5-ft. Span	6-ft. Span	7-ft. Span	8-ft. Span	10-ft. Span	12-ft. Span
4 3/4" Width	6246T41	2"	10	(U)	1900	844	474	303	210	154	118	—	—
				(UD)	0.03"	0.07"	0.12"	0.19"	0.28"	0.38"	0.49"	—	—
				(CL)	752	501	376	300	250	214	187	—	—
				(CLD)	0.02"	0.06"	0.10"	0.15"	0.22"	0.30"	0.39"	—	—
7" Width	6246T22	2"	10	(U)	1586	704	395	252	175	128	98	—	—
				(UD)	0.02"	0.05"	0.09"	0.13"	0.19"	0.26"	0.34"	—	—
				(CL)	925	617	462	369	307	263	230	—	—
				(CLD)	0.03"	0.06"	0.10"	0.16"	0.23"	0.31"	0.40"	—	—
9 1/2" Width	6246T23	2"	10	(U)	1363	605	339	216	150	109	83	—	—
				(UD)	0.02"	0.04"	0.07"	0.10"	0.15"	0.20"	0.26"	—	—
				(CL)	1079	719	539	430	358	306	267	—	—
				(CLD)	0.03"	0.06"	0.11"	0.17"	0.24"	0.33"	0.43"	—	—
11 3/4" Width	6246T24	2"	10	(U)	1244	552	310	197	136	100	76	—	—
				(UD)	0.01"	0.03"	0.05"	0.08"	0.12"	0.16"	0.21"	—	—
				(CL)	1220	812	608	486	404	346	301	—	—
				(CLD)	0.03"	0.06"	0.11"	0.16"	0.24"	0.32"	0.42"	—	—
18 3/4" Width	6246T35	2"	10	(U)	514	229	129	83	58	—	—	—	—
				(UD)	0.16"	0.36"	0.61"	0.97"	1.40"	—	—	—	—
				(CL)	537	537	402	323	269	—	—	—	—
				(CLD)	0.09"	0.28"	0.50"	0.78"	1.12"	—	—	—	—

Continued

Copyright © 2002 McMaster-Carr Supply Company. All rights reserved.