Fermilab

Particle Physics Division
Mechanical Department Engineering Note

Number: MD-ENG-127 Date: 7-23-2007

Project Internal Reference: Electronic version of spread sheet on NOvA docdb # 1096

Project: NOvA

Title: NOvA Far Detector Extrusion and Scintillator Mass

Author(s): Dave Pushka

Reviewer(s): Anglee (8-20-07)

Key Words:

Abstract Summary:

Applicable Codes: None.

The NOvA far detector uses PVC extrusions which have fabrication tolerances. These tolerances affect the mass of PVC (inactive material) and scintillator (active material) in the far detector.

This engineering note calculates the range of the mass of the detector for a finite number of blocks and extrusions produced at the nominal dimensions, maximum material dimensions, and minimal material dimensions. The percent of the active mass is then calculated for the detector at these three conditions.

REV	DESCRIPTION	DRAWN	DATE
		APPROVED	DATE
A	DIM 66.0±.3 WAS 66.0+1.4/-.6 DIM 635.0±2.0 WAS 635.0±3.0 FLATNESS 0.5 WAS 1.0	J.CATALANELLO/D.FRIEND	15-JUN-2009
		RICHARD TALAGA	09-JUL-2009

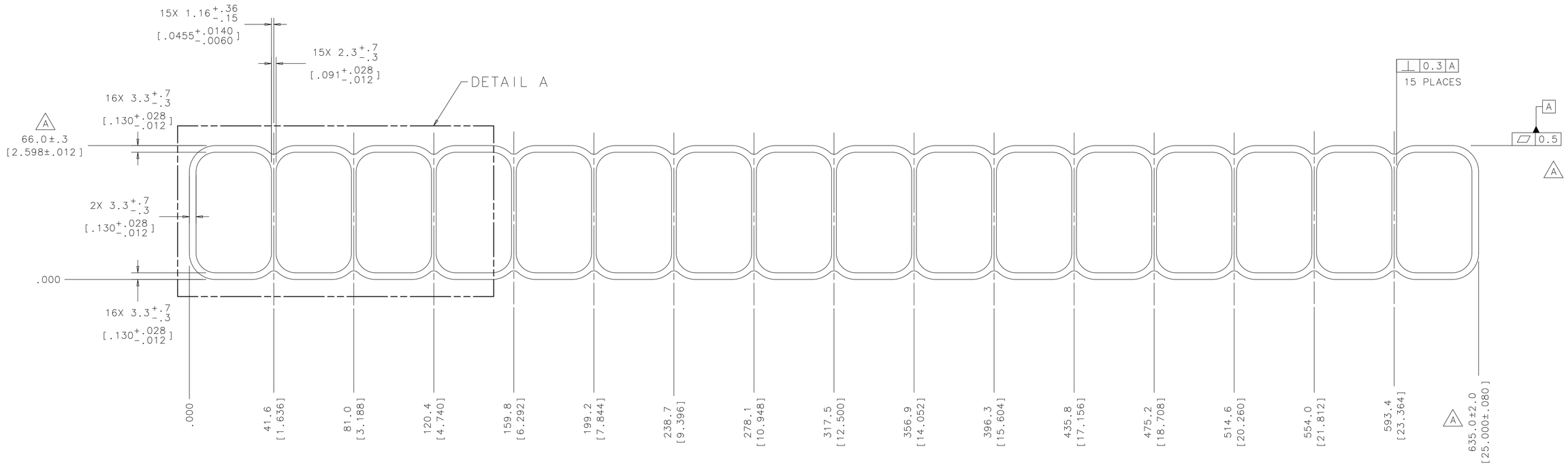

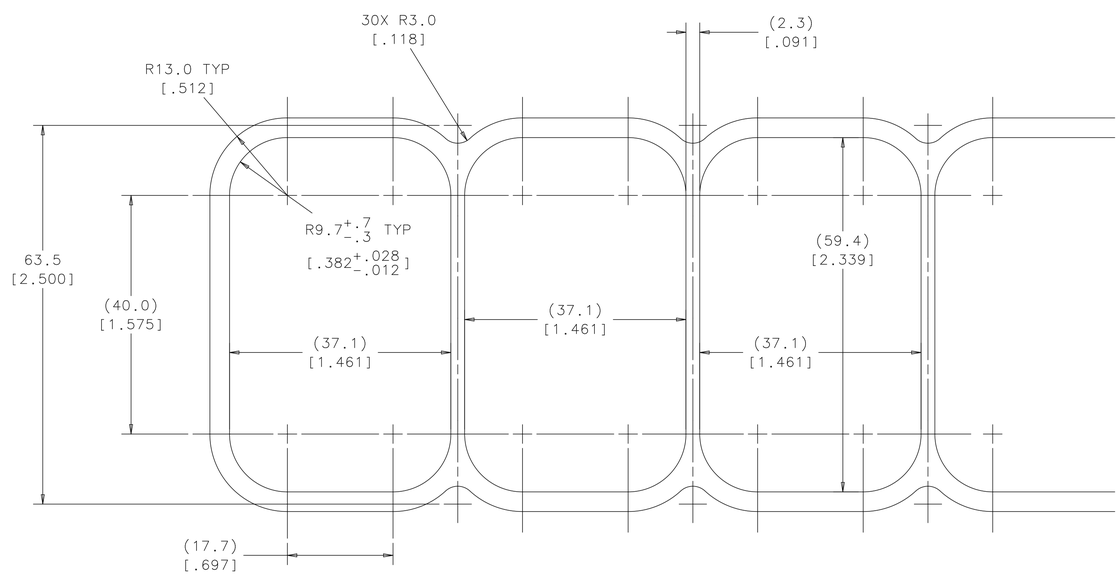

DETAIL A
SCALE: 2:1

NOTES:

3. TOTAL LIQUID SCINTILLATOR CROSS SECTIONAL AREA IS 33,985.376 sq-mm (52.677 sq-in)
2. EXTRUSION CROSS SECTIONAL AREA (PVC ONLY) IS 6,721.144 sq-mm (10.418 sq-in)
1. EXTRUSIONS SHALL BE STRAIGHT WITHIN 1.5mm PER 1M (.049 PER 3.28 FT)

NOTICE: IMAGE OBTAINED FROM FERMILAB WEB SITE
This information is provided for REFERENCE use only. Not for MANUFACTURE, or DESIGN INFORMATION. All information contained in this document represents work sponsored by an agency of the U.S. Government. Neither the U.S. Government nor any agency thereof, nor Universities Research Association, Inc., nor any of their employees or officers, makes any warranty, express or implied, or assumes any legal liability or responsibility for the accuracy, completeness, or usefulness of any information, apparatus, product or process disclosed, or represents that its use would not infringe privately owned rights.

UNLESS OTHERWISE SPECIFIED			ORIGINATOR	R.TALAGA	12-JUL-2007
.X	.XX	ANGLES	DRAWN	D.FRIEND	12-JUL-2007
± .5	± ---	± 1°	CHECKED	-----	18-MAY-2009
1. BREAK ALL SHARP EDGES .4 MAX. 2. DO NOT SCALE DRAWING. 3. DIMENSIONS BASED UPON ASME Y14.5M-1994 4. MAX. ALL MACH. SURFACES 3.2 5. DRAWING UNITS: MM			APPROVED	-----	18-MAY-2009
			USED ON		
			MATERIAL	PVC	

FERMI NATIONAL ACCELERATOR LABORATORY
UNITED STATES DEPARTMENT OF ENERGY

NOVA TECHNICAL DESIGN REPORT 16 CELL PROFILE FAR DETECTOR HORIZONTAL EXTRUSION DIE PROFILE

SCALE	DRAWING NUMBER	SHEET	REV
1:1 & AS NOTED	3929.000-MD-444188	1 OF 1	A

CREATED WITH : Ideas12NXSeries | GROUP: PPD/MECHANICAL DEPARTMENT

REV	DESCRIPTION	DRAWN	DATE
		APPROVED	DATE
A	DIM 66.0±.3 WAS 66.0+1.4/-.6 DIM 635.0±2.0 WAS 635.0±3.0 FLATNESS 0.5 WAS FLATNESS 1.0	J.CATALANELLO/D.FRIEND	15-JUN-2009
		RICHARD TALAGA	09-JUL-2009

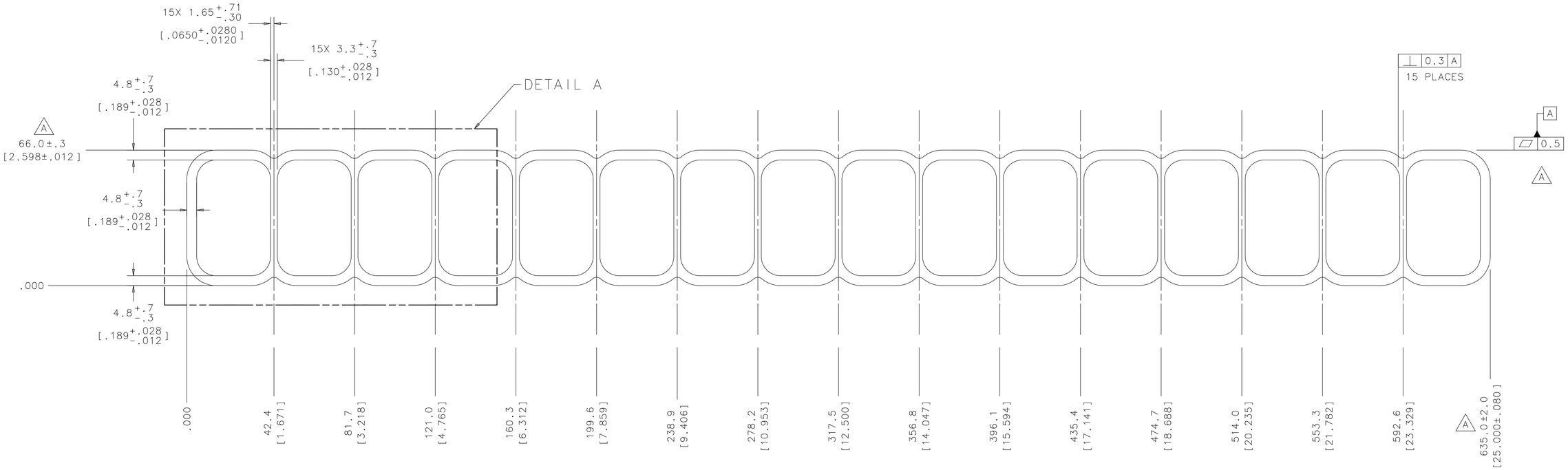

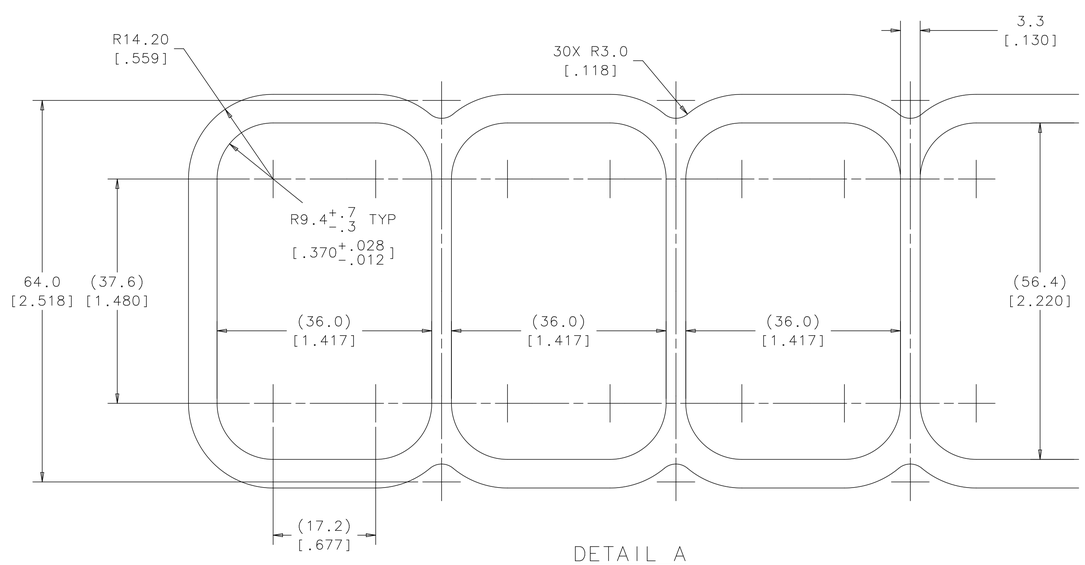

DETAIL A

SCALE: 2:1

3. TOTAL LIQUID SCINTILLATOR CROSS SECTIONAL AREA IS 31,267.168 sq-mm (48.464 sq-in)

2. EXTRUSION CROSS SECTIONAL AREA (PVC ONLY) IS 9,456.636 sq-mm (14.657 sq-in)

1. EXTRUSIONS SHALL BE STRAIGHT WITHIN 1.5mm PER 1M (.049 PER 3.28 FT)

NOTES:

NOTICE: IMAGE OBTAINED FROM FERMILAB WEB SITE

This information is provided for REFERENCE use only. Not for MANUFACTURE, or DESIGN INFORMATION. All information contained in this document represents work sponsored by an agency of the U.S. Government. Neither the U.S. Government nor any agency thereof, nor Universities Research Association, Inc., nor any of their employees or officers, makes any warranty, express or implied, or assumes any legal liability or responsibility for the accuracy, completeness, or usefulness of any information, apparatus, product or process disclosed, or represents that its use would not infringe privately owned rights.

UNLESS OTHERWISE SPECIFIED			ORIGINATOR	R.TALAGA	12-JUL-2007
.X	.XX	ANGLES	DRAWN	D.FRIEND	12-JUL-2007
± .5	± ---	± 1°	CHECKED	-----	18-MAY-2009
1. BREAK ALL SHARP EDGES .4 MAX. 2. DO NOT SCALE DRAWING. 3. DIMENSIONS BASED UPON ASME Y14.5M-1994 4. MAX. ALL MACH. SURFACES 3.2 5. DRAWING UNITS: MM			APPROVED	-----	18-MAY-2009
			USED ON		
			MATERIAL	PVC	

FERMI NATIONAL ACCELERATOR LABORATORY
UNITED STATES DEPARTMENT OF ENERGY

NOVA TECHNICAL DESIGN REPORT 16 CELL PROFILE FAR DETECTOR VERTICAL EXTRUSION DIE PROFILE

SCALE	DRAWING NUMBER	SHEET	REV
1:1 & AS NOTED	3929.000-MD-444189	1 OF 1	A

CREATED WITH : Ideas12NXSeries | GROUP: PPD/MECHANICAL DEPARTMENT

	A	B	C	D	E	F	G	H	I	J	K	L	M	N	O
1	**Exterior Gross Volume of 16 cell PVC Extrusions (applies to both vertical and horizontal extrusions)**														
2	Nominal Exterior Height, mm	66									264.172051				12 mill glue line thickne
3	Nominal Exterior Width, mm	635		**DETECTOR DIMENSIONS**											295 feet long space
4	Nominal Exterior radius, mm	14.2		**Number of Blocks**			**38**								
5	Nominal Fillet Radius, mm	3		**Number of vertical planes per "A" block**			**16**								
6	Nominal Horz. Extru Inner Wall thickness	2.3		**Number of horizontal planes per "A" block**			**15**								
7	Nominal Vertical Extru Inner Wall thicknes	3.3		**Number of vertical planes per "B" block**			**15**								
8	Distance = Radius inner + T inner/2	10.85		**Number of horizontal planes per "B" block**			**16**								
9	Theta = cos-1 (distance/radius outer)	0.701		**Number of extrusions per vertical plane**			**24**								
10	Sin (theta)	0.645		**Number of extrusions per horizontal plane**			**24**								
11	Scallop Area = distance*radius outer*(1-sin (theta))			**Length of vertical planes, meters**			**15.494**								
12	Scallop Area, mm2 =	54.7		**Length of horizontal planes, meters**			**15.494**								
13	Scallop Area Fudge Factor	0.625486883		**Length of vertical planes, inches**			**610**								
14				**Length of horizontal planes, inches**			**610**								
15	gap between planes for glue, inches	0.012		**Number of Vertical PlanesPlanes**			**593.0**								
16	gap between blocks in a superblock, in	0		**Number of Horizontal PlanesPlanes**			**585.0**								
17	gap between superblocks, in	0.787401575		**Number of Planes**			**1,178.0**								
18	gap between planes for glue, mm	0.3048		**Sum of the vertical plane length, meters**			**220,510.6**								
19	gap between blocks in a superblock, mm	0		**Sum of the horizontal plane lengths, meters**			**217,535.8**								
20	gap between superblocks, mm	20		**Length // to beam of Bare Planes, mm**			**77,748.0**								
21				**Length // to beam of Bare Planes, ft**			**255.1**								
22	number of blocks in a super block	5		**Length // to beam of Glue, ft**			**1.1**								
23	number of full superblocks	7		**Length of Gaps between superblocks, ft**			**0.459**								
24	number of block in last superblock	3		**Length of Gaps between blocks within one superblock, ft**			**0**								
25	number of 'A' blocks	23													
26	number of 'B' blocks	15		**Overall Length of Detector, ft**			**256.7**								
27															
28				**PVC Specific Gravity**			**1.49**								
29				**PVC Density (mg/m3)**			**1490**								
30	Max Mat Cond Height Tolerance, mm	1.4													
31	Max Mat Cond Exterior Height, mm	67.4		**Mass of Horizontal PVC of Nominal Dimensions, kg**			**2,179,938**				9.886	kg/m			
32	Min Mat Cond Height Tolerance, mm	0.6		**Minimum mass of Horizontal PVC, kg**			**1,884,930**				8.548	kg/m			
33	Min Mat Cond Exterior Height, mm	65.4		**Maximum mass of Horizontal PVC, kg**			**2,913,053**				13.210	kg/m			
34															
35	Max Mat Cond Width Tolerance, mm	3		**Mass of VERTICAL PVC of Nom. Dim., kg**			**3,108,342**				14.289	kg/m			
36	Max Mat Cond Exterior Width, mm	638		**Minimum mass of VERTICAL PVC, kg**			**2,761,419**				12.694	kg/m			
37	Min Mat Cond Width Tolerance, mm	3		**Maximum mass of VERTICAL PVC, kg**			**3,751,047**				17.243	kg/m			
38	Min Mat Cond Exterior Width, mm	632													
39				**SUM MASS OF PVC of Nominal Dimensions, kg**			**5,288,280**								
40	Max Mat Cond Radius Tolerance, mm	0.7		**SUM MASS OF PVC of Minimal Dimensions, kg**			**4,646,349**								
41	Max Mat Cond Exterior radius, mm	13.5		**SUM MASS OF PVC of Maximal Dimensions, kg**			**6,664,100**								
42	Min Mat Cond Radius Tolerance, mm	1.4													
43	Min Mat Cond Exterior radius, mm	15.6		**Scintillator Specific Gravity**			**0.8529**								
44				**Scintillator Density (kg/m3)**			**852.9**								
45	**For Nominal Radius**														
46	Nominal Gross Area extr, mm2	40,710.9		**Mass of Horizontal Scintillator of Nom. Dim., kg**			**6,305,520**								
47	Max Gross Area extr, mm2	41,802.1		**Minimum mass of Horizontal Scintillator, kg**			**5,778,782**								
48	Min Gross Area extr, mm2	40,133.7		**Maximum mass of Horizontal Scintillator, kg**			**6,599,408**								
49															
50	**For Minimum Radius**			**Mass of VERTICAL Scintillator of Nom. Dim, kg**			**5,880,528**								
51	Nominal Gross Area extr, mm2	40,727.6		**Minimum mass of VERTICAL Scintillator, kg**			**5,461,926**								
52	Max Gross Area extr, mm2	41,818.8		**Maximum mass of VERTICAL Scintillator, kg**			**6,200,283**								
53	Min Gross Area extr, mm2	40,150.4													
54				**SUM MASS OF Scintillator of Nom. Dim., kg**			**12,186,047**								
55	**For Maximum Radius**			**SUM MASS OF Scintillator of Min. Dim., kg**			**11,240,707**								
56	Nominal Gross Area extr, mm2	40,675.1		**SUM MASS OF Scintillator of Max. Dim., kg**			**12,799,692**								
57	Max Gross Area extr, mm2	41,766.3													
58	Min Gross Area extr, mm2	40,097.9		**SUM Volume of Scintillator of Nom. Dim., gallons**			**3,774,432**								
59				**SUM Volume of Scintillator of Min. Dim., gallons**			**3,481,628**								
60				**SUM Volume of Scintillator of Max. Dim., gallons**			**3,964,499**								
61	**Interior Cell Dimension Tolerances for HORIZONTAL Extrusions (thinner webs and walls):**														
62	Nominal Wall Thickness	3.3													
63	Max Mat CondWall Thickness tolerance	0.7		**SUM MASS OF Whole detector of Nom. Dim., kg**			**17,474,327**								
64	Min Mat CondWall Thickness tolerance	-0.3		**SUM MASS OF Whole Detector of Min. Dim., kg**			**15,887,056**		0.909165521						
65				**SUM MASS OF Whole Detector of Max. Dim., kg**			**19,463,792**		1.113850702						
66	Nominal corner Radius	9.7													
67	Max Mat Cond Corner Radius tolerance	-0.3		**Percent Active Mass of Detector of Nominal Dimensions, kg**					**0.6974**						
68	Min Mat Cond Corner Radius tolerance	0.7		**Percent Active Mass of Detector of Minimal Dimensions, kg**					**0.7075**						
69				**Percent Active Mass of Detector of Maximal Dimensions, kg**					**0.6576**						
70															
71															
72	**Interior Cell Dimensions Based on Nominal Extrusion Outside Dimensions (Height and Width) for HORIZONTAL Extrusions (thinner webs and walls):**														
73	Nominal Cell Width, mm	37.11875													
74	Maximum Cell Width, mm	37.7													
75	Mininum Cell Width, mm	35.7													
76	Ok						**Net PVC X-SECTION**								
77	Nominal Cell Height, mm	59.4					**AREA for One 16 cell**								
78	Maximum Cell Height, mm	60					**HORIZONTAL**								
79	Mininum Cell Height, mm	58					**extrusion, mm2**		**Horizontal Extrusions**		**Horizontal Extrusions**		**Horizontal Extrusions**		**Horizontal Extrusions**
80	Ok			**FOR ALL 16 CELLS in one HORIZONTAL Extrusion**					**Volume of PVC, m3**		**mass of PVC, kg**		**Volume of Scintillator, m3**		**Mass of Scintillator, k**
81	**For Nominal Radius**			**For Nominal Radius**			**For Nominal Radius**		**For Nominal Radius**		**For Nominal Radius**		**For Nominal Radius**		**For Nominal Radius**
82	Nominal Cell Scint Area, mm2	***2124.1***		Nominal Cell Scint Area, mm2	**33,985.379**		**6,725.54**		1463.0		2,179,938		7393.0		6,305,520
83	Maximum Cell Scint Area, mm2	2182.4		Maximum Cell Scint Area, mm2	34,917.7		6,884.40		1497.6		2,231,429		7595.9		6,478,503
84	Minimum Cell Scint Area, mm2	1990.9		Minimum Cell Scint Area, mm2	31,854.7		8,279.00		1801.0		2,683,458		6929.5		5,910,205
85	Ok			Ok											
86	**For Minimum Radius (more Scint, less PVC))**			**For Minimum Radius (more Scint, less PVC))**			**For Minimum Radius**		**For Minimum Radius**		**For Minimum Radius**		**For Minimum Radius**		**For Minimum Radius**
87	Nominal Cell Scint Area, mm2	2129.0		Nominal Cell Scint Area, mm2	34,064.1		6,663.49		1449.5		2,159,824		7410.2		6,320,121
88	Maximum Cell Scint Area, mm2	2187.3		Maximum Cell Scint Area, mm2	34,996.4		6,822.35		1484.1		2,211,315		7613.0		6,493,104
89	Minimum Cell Scint Area, mm2	1995.8		Minimum Cell Scint Area, mm2	31,933.4		8,216.95		1787.5		2,663,345		6946.7		5,924,807
90	Ok			Ok											
91	**For Maximum Radius (Less Scint, more PVC)**			**For Maximum Radius (Less Scint, more PVC)**			**For Maximum Radius**		**For Maximum Radius**		**For Maximum Radius**		**For Maximum Radius**		**For Maximum Radius**
92	Nominal Cell Scint Area, mm2	2112.0		Nominal Cell Scint Area, mm2	33,792.1		6,882.97		1497.3		2,230,966		7351.0		6,269,666
93	Maximum Cell Scint Area, mm2	2170.3		Maximum Cell Scint Area, mm2	34,724.5		7,041.83		1531.9		2,282,457		7553.8		6,442,649
94	Minimum Cell Scint Area, mm2	1978.8		Minimum Cell Scint Area, mm2	31,661.5		8,436.43		1835.2		2,734,486		6887.5		5,874,351
95	Ok			Ok											
96															
97															
98	**Interior Cell Dimensions Based on Maximum Material Condition Extrusion Outside Dimensions (Height and Width) for Horizontal Extrusions (thinner webs and walls):**														
99	Nominal Cell Width, mm	37.1													
100	Maximum Cell Width, mm	37.7													
101	Mininum Cell Width, mm	35.7													
102	Ok						**Net PVC X-SECTION**								
103	Nominal Cell Height, mm	60.8					**AREA for One 16 cell**								
104	Maximum Cell Height, mm	61.4					**HORIZONTAL**		**Horizontal Extrusions**		**Horizontal Extrusions**		**Horizontal Extrusions**		**Horizontal Extrusions**
105	Mininum Cell Height, mm	59.4					**extrusion, mm2**		**Volume of PVC, m3**		**mass of PVC, kg**		**Volume of Scintillator, m3**		**Mass of Scintillator, k**
106	Ok			**FOR ALL 16 CELLS in one HORIZONTAL Extrusion**											
107	**For Nominal Radius**			**For Nominal Radius**			**For Nominal Radius**		**For Nominal Radius**		**For Nominal Radius**		**For Nominal Radius**		**For Nominal Radius**
108	Nominal Cell Scint Area, mm2	2176.1		Nominal Cell Scint Area, mm2	34,816.8		5,894.08		1282.2		1,910,438		7573.9		6,459,786
109	Maximum Cell Scint Area, mm2	2235.2		Maximum Cell Scint Area, mm2	35,762.6		6,039.50		1313.8		1,957,573		7779.6		6,635,282
110	Minimum Cell Scint Area, mm2	2040.9		Minimum Cell Scint Area, mm2	32,654.8		7,478.90		1626.9		2,424,123		7103.6		6,058,653
111	Ok			Ok											
112	**For Minimum Radius**			**For Minimum Radius**			**For Minimum Radius**		**For Minimum Radius**		**For Minimum Radius**		**For Minimum Radius**		**For Minimum Radius**
113	Nominal Cell Scint Area, mm2	2181.0		Nominal Cell Scint Area, mm2	34,895.5		5,815.38		1265.1		1,884,930		7591.0		6,474,387
114	Maximum Cell Scint Area, mm2	2240.1		Maximum Cell Scint Area, mm2	35,841.3		5,960.80		1296.7		1,932,064		7796.8		6,649,864
115	Minimum Cell Scint Area, mm2	2045.8		Minimum Cell Scint Area, mm2	32,733.5		7,400.20		1609.8		2,398,615		7120.7		6,073,254
116	Ok			Ok											
117	**For Maximum Radius**			**For Maximum Radius**			**For Maximum Radius**		**For Maximum Radius**		**For Maximum Radius**		**For Maximum Radius**		**For Maximum Radius**
118	Nominal Cell Scint Area, mm2	2164.0		Nominal Cell Scint Area, mm2	34,623.6		6,087.32		1324.2		1,973,074		7531.9		6,423,932
119	Maximum Cell Scint Area, mm2	2223.1		Maximum Cell Scint Area, mm2	35,569.4		6,232.74		1355.8		2,020,209		7737.6		6,599,408
120	Minimum Cell Scint Area, mm2	2028.8		Minimum Cell Scint Area, mm2	32,461.6		7,672.14		1669.0		2,486,759		7061.6		6,022,799
121	Ok			Ok											
122															
123															
124	**Interior Cell Dimensions Based on Minimum Material Condition Extrusion Outside Dimensions (Height and Width) for Horizontal Extrusions (thinner webs and walls):**														
125	Nominal Cell Width, mm	36.9													
126	Maximum Cell Width, mm	37.5													
127	Mininum Cell Width, mm	35.5													
128	Ok														
129	Nominal Cell Height, mm	58.80					**Net PVC X-SECTION**								
130	Maximum Cell Height, mm	59.40					**AREA for One 16 cell**								
131	Mininum Cell Height, mm	57.40					**HORIZONTAL**		**Horizontal Extrusions**		**Horizontal Extrusions**		**Horizontal Extrusions**		**Horizontal Extrusions**
132	Ok			**FOR ALL 16 CELLS in one HORIZONTAL Extrusion**			**extrusion, mm2**		**Volume of PVC, m3**		**mass of PVC, kg**		**Volume of Scintillator, m3**		**Mass of Scintillator, k**
133	**For Nominal Radius**			**For Nominal Radius**			**For Nominal Radius**		**For Nominal Radius**		**For Nominal Radius**		**For Nominal Radius**		**For Nominal Radius**
134	Nominal Cell Scint Area, mm2	2090.8		Nominal Cell Scint Area, mm2	33,452.6		7,258.28		1578.9		2,352,614		7277.1		6,206,677
135	Maximum Cell Scint Area, mm2	2148.6		Maximum Cell Scint Area, mm2	34,377.4		7,424.70		1615.1		2,406,555		7478.3		6,378,257
136	Minimum Cell Scint Area, mm2	1958.7		Minimum Cell Scint Area, mm2	31,339.6		8,794.10		1913.0		2,850,417		6817.5		5,814,635
137	Ok			Ok											
138	**For Minimum Radius**			**For Minimum Radius**			**For Minimum Radius**		**For Minimum Radius**		**For Minimum Radius**		**For Minimum Radius**		**For Minimum Radius**
139	Nominal Cell Scint Area, mm2	2095.7		Nominal Cell Scint Area, mm2	33,531.3		7,179.58		1561.8		2,327,105		7294.3		6,221,279
140	Maximum Cell Scint Area, mm2	2153.5		Maximum Cell Scint Area, mm2	34,456.1		7,346.00		1598.0		2,381,047		7495.4		6,392,859
141	Minimum Cell Scint Area, mm2	1963.6		Minimum Cell Scint Area, mm2	31,418.3		8,715.40		1895.9		2,824,908		6834.6		5,829,237
142	Ok			Ok											
143	**For Maximum Radius**			**For Maximum Radius**			**For Maximum Radius**		**For Maximum Radius**		**For Maximum Radius**		**For Maximum Radius**		**For Maximum Radius**
144	Nominal Cell Scint Area, mm2	2078.7		Nominal Cell Scint Area, mm2	33,259.4		7,451.52		1621.0		2,415,250		7235.1		6,170,823
145	Maximum Cell Scint Area, mm2	2136.5		Maximum Cell Scint Area, mm2	34,184.2		7,617.94		1657.2		2,469,191		7436.3		6,342,404
146	Minimum Cell Scint Area, mm2	1946.6		Minimum Cell Scint Area, mm2	31,146.4		8,987.34		1955.1		2,913,053		6775.5		5,778,782
147	Ok			Ok											
148															
149															
150	**Interior Cell Dimension Tolerances for Vertical Extrusions (Thicker webs and walls):**														
151	Nominal Wall Thickness	4.8													
152	Max Mat CondWall Thickness tolerance	0.7													
153	Min Mat CondWall Thickness tolerance	-0.3													
154															
155	Nominal corner Radius	9.4													
156	Max Mat Cond Corner Radius tolerance	-0.3													
157	Min Mat Cond Corner Radius tolerance	0.7													
158	ff	1.00041111													
159															
160															
161	**Interior Cell Dimensions Based on Nominal Extrusion Outside Dimensions (Height and Width) for Vertical Extrusions (Thicker webs and walls):**														
162	Nominal Cell Width, mm	36.0													
163	Maximum Cell Width, mm	36.6													
164	Mininum Cell Width, mm	34.6													
165	Ok														
166	Nominal Cell Height, mm	56.4					**Net PVC X-SECTION**								
167	Maximum Cell Height, mm	57					**AREA for One 16 cell**								
168	Mininum Cell Height, mm	55					**HORIZONTAL**		**Vertical Extrusions**		**Vertical Extrusions**		**Vertical Extrusions**		**Vertical Extrusions**
169	Ok			**FOR ALL 16 CELLS in one Vertical Extrusion**			**extrusion, mm2**		**Volume of PVC, m3**		**mass of PVC, kg**		**Volume of Scintillator, m3**		**Mass of Scintillator, k**
170	**For Nominal Radius**			**For Nominal Radius**			**For Nominal Radius**		**For Nominal Radius**		**For Nominal Radius**		**For Nominal Radius**		**For Nominal Radius**
171	Nominal Cell Scint Area, mm2	1954.2		Nominal Cell Scint Area, mm2	**31,267.178**		**9,460.4779**		2086.1		3,108,342		6894.7		5,180,528
172	Maximum Cell Scint Area, mm2	2010.0		Maximum Cell Scint Area, mm2	32,159.9		9,659.39		2130.0		3,173,696		7091.6		5,248,428
173	Minimum Cell Scint Area, mm2	1826.8		Minimum Cell Scint Area, mm2	29,228.9		10,921.30		2408.3		3,588,311		6445.3		5,197,185
174	Ok			Ok											
175	**For Minimum Radius (more Scint, less PVC))**			**For Minimum Radius (more Scint, less PVC))**			**For Minimum Radius**		**For Minimum Radius**		**For Minimum Radius**		**For Minimum Radius**		**For Minimum Radius**
176	Nominal Cell Scint Area, mm2	1959.0		Nominal Cell Scint Area, mm2	31,343.4		9,384.25		2069.3		3,083,297		6911.6		5,394,864
177	Maximum Cell Scint Area, mm2	2014.8		Maximum Cell Scint Area, mm2	32,236.1		9,583.16		2113.2		3,148,651		7108.4		6,062,764
178	Minimum Cell Scint Area, mm2	1831.6		Minimum Cell Scint Area, mm2	29,305.1		10,845.07		2391.5		3,563,266		6462.1		5,511,521
179	Ok			Ok											
180	**For Maximum Radius (Less Scint, more PVC)**			**For Maximum Radius (Less Scint, more PVC)**			**For Maximum Radius**		**For Maximum Radius**		***For Maximum Radius***		***For Maximum Radius***		**For Maximum Radius**
181	Nominal Cell Scint Area, mm2	1942.5		Nominal Cell Scint Area, mm2	31,079.7		9,647.95		2127.5		3,169,940		6853.4		5,845,268
182	Maximum Cell Scint Area, mm2	1998.3		Maximum Cell Scint Area, mm2	31,972.4		9,846.86		2171.3		3,235,293		7050.3		6,013,169
183	Minimum Cell Scint Area, mm2	1815.1		Minimum Cell Scint Area, mm2	29,041.4		11,108.78		2449.6		3,649,909		6403.9		5,461,926
184	Ok			Ok											
185															
186															
187	**Interior Cell Dimensions Based on Maximum Material Condition Extrusion Outside Dimensions (Height and Width) for Vertical Extrusions (Thicker webs and walls):**														
188	Nominal Cell Width, mm	36.2													
189	Maximum Cell Width, mm	36.8													
190	Mininum Cell Width, mm	36.0													
191	Ok														
192	Nominal Cell Height, mm	57.8					**Net PVC X-SECTION**								
193	Maximum Cell Height, mm	58.4					**AREA for One 16 cell**								
194	Mininum Cell Height, mm	56.4					**HORIZONTAL**		**Vertical Extrusions**		**Vertical Extrusions**		**Vertical Extrusions**		**Vertical Extrusions**
195	Ok			**FOR ALL 16 CELLS in one Vertical Extrusion**			**extrusion, mm2**		**Volume of PVC, m3**		**mass of PVC, kg**		**Volume of Scintillator, m3**		**Mass of Scintillator, k**
196	**For Nominal Radius**			**For Nominal Radius**			**For Nominal Radius**		**For Nominal Radius**		**For Nominal Radius**		**For Nominal Radius**		**For Nominal Radius**
197	Nominal Cell Scint Area, mm2	**2015.4**		Nominal Cell Scint Area, mm2	32,246.8		8,480.82		1870.1		2,786,464		7110.8		6,064,776
198	Maximum Cell Scint Area, mm2	2072.2		Maximum Cell Scint Area, mm2	33,154.8		8,664.49		1910.6		2,846,811		7311.0		6,235,543
199	Minimum Cell Scint Area, mm2	1954.2		Minimum Cell Scint Area, mm2	31,267.2		8,883.04		1958.8		2,918,619		6894.7		5,880,528
200	Ok			Ok											
201	**For Minimum Radius**			**For Minimum Radius**			**For Minimum Radius**		**For Minimum Radius**		**For Minimum Radius**		**For Minimum Radius**		**For Minimum Radius**
202	Nominal Cell Scint Area, mm2	2020.2		Nominal Cell Scint Area, mm2	32,323.1		8,404.59		1853.3		2,761,419		7127.6		6,079,112
203	Maximum Cell Scint Area, mm2	2076.9		Maximum Cell Scint Area, mm2	33,231.0		8,588.26		1893.8		2,821,766		7327.8		6,249,879
204	Minimum Cell Scint Area, mm2	1959.0		Minimum Cell Scint Area, mm2	31,343.4		8,806.81		1942.0		2,893,574		6911.6		5,894,864
205	Ok			Ok											
206	**For Maximum Radius**			**For Maximum Radius**			**For Maximum Radius**		**For Maximum Radius**		**For Maximum Radius**		**For Maximum Radius**		**For Maximum Radius**
207	Nominal Cell Scint Area, mm2	2003.7		Nominal Cell Scint Area, mm2	32,059.4		8,668.29		1911.5		2,848,062		7069.4		6,029,516
208	Maximum Cell Scint Area, mm2	2060.5		Maximum Cell Scint Area, mm2	32,967.3		8,851.96		1952.0		2,908,408		7269.6		6,200,283
209	Minimum Cell Scint Area, mm2	1942.5		Minimum Cell Scint Area, mm2	31,079.7		9,070.52		2000.1		2,980,216		6853.4		5,845,268
210	Ok			Ok											
211															
212															
213	**Interior Cell Dimensions Based on Minimum Material Condition Extrusion Outside Dimensions (Height and Width) for Vertical Extrusions (Thicker webs and walls):**														
214	Nominal Cell Width, mm	35.8													
215	Maximum Cell Width, mm	36.4													
216	Mininum Cell Width, mm	34.4													
217	Ok														
218	Nominal Cell Height, mm	55.8					**Net PVC X-SECTION**								
219	Maximum Cell Height, mm	56.4					**AREA for One 16 cell**								
220	Mininum Cell Height, mm	54.4					**HORIZONTAL**		**Vertical Extrusions**		**Vertical Extrusions**		**Vertical Extrusions**		**Vertical Extrusions**
221	Ok			**FOR ALL 16 CELLS in one Vertical Extrusion**			**extrusion, mm2**		**Volume of PVC, m3**		**mass of PVC, kg**		**Volume of Scintillator, m3**		**Mass of Scintillator, k**
222	***For Nominal Radius***			***For Nominal Radius***			**For Nominal Radius**		**For Nominal Radius**		**For Nominal Radius**		**For Nominal Radius**		**For Nominal Radius**
223	Nominal Cell Scint Area, mm2	1922.1		Nominal Cell Scint Area, mm2	30,754.2		9,395.98		2071.9		3,087,151		6781.6		5,784,057
224	Maximum Cell Scint Area, mm2	1977.5		Maximum Cell Scint Area, mm2	31,639.4		8,510.80		1876.7		2,796,316		6976.8		5,950,536
225	Minimum Cell Scint Area, mm2	1795.9		Minimum Cell Scint Area, mm2	28,733.6		11,416.60		2517.5		3,751,047		6336.1		5,404,032
226	Ok			Ok											
227	**For Minimum Radius**			**For Minimum Radius**			**For Minimum Radius**		**For Minimum Radius**		**For Minimum Radius**		**For Minimum Radius**		**For Minimum Radius**
228	Nominal Cell Scint Area, mm2	1926.9		Nominal Cell Scint Area, mm2	30,830.5		9,319.75		2055.1		3,062,106		6798.4		5,798,393
229	Maximum Cell Scint Area, mm2	1982.2		Maximum Cell Scint Area, mm2	31,715.6		8,434.57		1859.9		2,771,270		6993.6		5,964,872
230	Minimum Cell Scint Area, mm2	1800.6		Minimum Cell Scint Area, mm2	28,809.8		11,340.37		2500.7		3,726,002		6352.9		5,418,368
231	Ok			Ok											
232	**For Maximum Radius**			**For Maximum Radius**			**For Maximum Radius**		**For Maximum Radius**		**For Maximum Radius**		**For Maximum Radius**		**For Maximum Radius**
233	Nominal Cell Scint Area, mm2	1910.4		Nominal Cell Scint Area, mm2	30,566.8		9,583.46		2113.3		3,148,748		6740.3		5,748,798
234	Maximum Cell Scint Area, mm2	1965.7		Maximum Cell Scint Area, mm2	31,451.9		8,698.28		1918.1		2,857,913		6935.5		5,915,277
235	Minimum Cell Scint Area, mm2	1863.2		Minimum Cell Scint Area, mm2	29,811.4		10,338.85		2279.8		3,396,942		6573.7		5,606,728

Row	A	B
1	Exterior Gross Volume of 16 cell PVC Extrusions (applies to both vertical and h	
2	Nominal Exterior Height, mm	66
3	Nominal Exterior Width, mm	635
4	Nominal Exterior radius, mm	=9.4+4.8
5	Nominal Fillet Radius, mm	3
6	Nominal Horz. Extru Inner Wall thickness	2.3
7	Nominal Vertical Extru Inner Wall thickness	3.3
8	Distance = Radius inner + T inner/2	=B66+B6/2
9	Theta = cos-1 (distance/radius outer)	=ACOS(B8/B4)
10	Sin (theta)	=SIN(B9)
11	Scallop Area = distance*radius outer*(1-sin (theta))	
12	Scallop Area, mm2 =	=B8*B4*(1-B10)
13	Scallop Area Fudge Factor	0.625486883452639
14		
15	gap between planes for glue, inches	0.012
16	gap between blocks in a superblock, in	0
17	gap between superblocks, in	=2/2.54
18	gap between planes for glue, mm	=B15*25.4
19	gap between blocks in a superblock, mm	=B16*25.4
20	gap between superblocks, mm	=B17*25.4
21		
22	number of blocks in a super block	5
23	number of full superblocks	=INT(G4/B22)
24	number of block in last superblock	=G4-(B22*B23)
25	number of 'A' blocks	=3*B23+2
26	number of 'B' blocks	=2*B23+1
27		
28		
29		
30	Max Mat Cond Height Tolerance, mm	1.4
31	Max Mat Cond Exterior Height, mm	=B2+B30
32	Min Mat Cond Height Tolerance, mm	0.6
33	Min Mat Cond Exterior Height, mm	=B2-B32
34		
35	Max Mat Cond Width Tolerance, mm	3
36	Max Mat Cond Exterior Width, mm	=B3+B35
37	Min Mat Cond Width Tolerance, mm	3
38	Min Mat Cond Exterior Width, mm	=B3-B37
39		
40	Max Mat Cond Radius Tolerance, mm	=B30/2
41	Max Mat Cond Exterior radius, mm	=B4-B40
42	Min Mat Cond Radius Tolerance, mm	1.4
43	Min Mat Cond Exterior radius, mm	=B4+B42
44		
45	For Nominal Radius	
46	Nominal Gross Area extr, mm2	=($B$3*$B$2)-(($B$4^2)*(4-PI()))-(30*B12*B1
47	Max Gross Area extr, mm2	=($B$31*$B$36)-(($B$4^2)*(4-PI()))-(30*B12*E
48	Min Gross Area extr, mm2	=($B$33*$B$38)-(($B$4^2)*(4-PI()))-(30*B12*E
49		
50	For Minimum Radius	
51	Nominal Gross Area extr, mm2	=($B$3*$B$2)-(($B$41^2)*(4-PI()))-(30*B12*B1
52	Max Gross Area extr, mm2	=($B$31*$B$36)-(($B$41^2)*(4-PI()))-(30*B12*
53	Min Gross Area extr, mm2	=($B$33*$B$38)-(($B$41^2)*(4-PI()))-(30*B12*
54		
55	For Maximum Radius	
56	Nominal Gross Area extr, mm2	=($B$3*$B$2)-(($B$43^2)*(4-PI()))-(30*B12*B1
57	Max Gross Area extr, mm2	=($B$31*$B$36)-(($B$43^2)*(4-PI()))-(30*B12*
58	Min Gross Area extr, mm2	=($B$33*$B$38)-(($B$43^2)*(4-PI()))-(30*B12*
59		
60		
61	Interior Cell Dimension Tolerances for HORIZONTAL Extrusions (thinner webs a	
62	Nominal Wall Thickness	3.3
63	Max Mat CondWall Thickness tolerance	0.7
64	Min Mat CondWall Thickness tolerance	-0.3
65		
66	Nominal corner Radius	9.7
67	Max Mat Cond Corner Radius tolerance	-0.3
68	Min Mat Cond Corner Radius tolerance	0.7
69		
70		
71		
72	Interior Cell Dimensions Based on Nominal Extrusion Outside Dimensions (Heig	
73	Nominal Cell Width, mm	=(B3 - 2*(B62) -15*(2.3))/16
74	Maximum Cell Width, mm	=$B$73-2*$B$64
75	Mininum Cell Width, mm	=$B$73-2*$B$63
76		=IF(AND(B74>B73,B73>B75),"Ok","NG")
77	Nominal Cell Height, mm	=B2-2*B62
78	Maximum Cell Height, mm	=$B$77-2*$B$64
79	Mininum Cell Height, mm	=$B$77-2*$B$63
80		=IF(AND(B78>B77,B77>B79),"Ok","NG")
81	For Nominal Radius	
82	Nominal Cell Scint Area, mm2	*=(B73*B77)-((4-PI())*($B$66^2))*
83	Maximum Cell Scint Area, mm2	=(B74*B78)-((4-PI())*($B$66^2))
84	Minimum Cell Scint Area, mm2	=(B75*B79)-((4-PI())*($B$66^2))
85		=IF(AND(B83>B82,B82>B84),"Ok","NG")
86	For Minimum Radius (more Scint, less PVC))	
87	Nominal Cell Scint Area, mm2	=(B73*B77)-((4-PI())*(($B$66+$B$67)^2))
88	Maximum Cell Scint Area, mm2	=(B74*B78)-((4-PI())*(($B$66+$B$67)^2))
89	Minimum Cell Scint Area, mm2	=(B75*B79)-((4-PI())*(($B$66+$B$67)^2))
90		=IF(AND(B88>B87,B87>B89),"Ok","NG")
91	For Maximum Radius (Less Scint, more PVC)	
92	Nominal Cell Scint Area, mm2	=(B73*B77)-((4-PI())*(($B$66+$B$68)^2))
93	Maximum Cell Scint Area, mm2	=(B74*B78)-((4-PI())*(($B$66+$B$68)^2))
94	Minimum Cell Scint Area, mm2	=(B75*B79)-((4-PI())*(($B$66+$B$68)^2))
95		=IF(AND(B93>B92,B92>B94),"Ok","NG")
96		
97		
98	Interior Cell Dimensions Based on Maximum Material Condition Extrusion Outsi	
99	Nominal Cell Width, mm	=((B3-2*B62-15*B6))/16
100	Maximum Cell Width, mm	=B99-2*$B$64
101	Mininum Cell Width, mm	=B99-2*$B$63
102		=IF(AND(B100>B99,B99>B101),"Ok","NG")
103	Nominal Cell Height, mm	=B77+B30
104	Maximum Cell Height, mm	=B103-2*$B$64
105	Mininum Cell Height, mm	=B103-2*$B$63
106		=IF(AND(B104>B103,B103>B105),"Ok","NG")
107	For Nominal Radius	
108	Nominal Cell Scint Area, mm2	=(B99*B103)-((4-PI())*($B$66^2))
109	Maximum Cell Scint Area, mm2	=(B100*B104)-((4-PI())*($B$66^2))
110	Minimum Cell Scint Area, mm2	=(B101*B105)-((4-PI())*($B$66^2))
111		=IF(AND(B109>B108,B108>B110),"Ok","NG")
112	For Minimum Radius	
113	Nominal Cell Scint Area, mm2	=(B99*B103)-((4-PI())*(($B$66+$B$67)^2))
114	Maximum Cell Scint Area, mm2	=(B100*B104)-((4-PI())*(($B$66+$B$67)^2))
115	Minimum Cell Scint Area, mm2	=(B101*B105)-((4-PI())*(($B$66+$B$67)^2))
116		=IF(AND(B114>B113,B113>B115),"Ok","NG")
117	For Maximum Radius	
118	Nominal Cell Scint Area, mm2	=(B99*B103)-((4-PI())*(($B$66+$B$68)^2))
119	Maximum Cell Scint Area, mm2	=(B100*B104)-((4-PI())*(($B$66+$B$68)^2))
120	Minimum Cell Scint Area, mm2	=(B101*B105)-((4-PI())*(($B$66+$B$68)^2))
121		=IF(AND(B119>B118,B118>B120),"Ok","NG")
122		
123		
124	Interior Cell Dimensions Based on Minimum Material Condition Extrusion Outsi	
125	Nominal Cell Width, mm	=$B$73-$B$37/16
126	Maximum Cell Width, mm	=B125-2*$B$64
127	Mininum Cell Width, mm	=B125-2*$B$63
128		=IF(AND(B126>B125,B125>B127),"Ok","NG")
129	Nominal Cell Height, mm	=B77-B32
130	Maximum Cell Height, mm	=B129-2*$B$64
131	Mininum Cell Height, mm	=B129-2*$B$63
132		=IF(AND(B130>B129,B129>B131),"Ok","NG")
133	For Nominal Radius	
134	Nominal Cell Scint Area, mm2	=(B125*B129)-((4-PI())*($B$66^2))
135	Maximum Cell Scint Area, mm2	=(B126*B130)-((4-PI())*($B$66^2))
136	Minimum Cell Scint Area, mm2	=(B127*B131)-((4-PI())*($B$66^2))
137		=IF(AND(B135>B134,B134>B136),"Ok","NG")
138	For Minimum Radius	
139	Nominal Cell Scint Area, mm2	=(B125*B129)-((4-PI())*(($B$66+$B$67)^2))
140	Maximum Cell Scint Area, mm2	=(B126*B130)-((4-PI())*(($B$66+$B$67)^2))
141	Minimum Cell Scint Area, mm2	=(B127*B131)-((4-PI())*(($B$66+$B$67)^2))
142		=IF(AND(B140>B139,B139>B141),"Ok","NG")
143	For Maximum Radius	
144	Nominal Cell Scint Area, mm2	=(B125*B129)-((4-PI())*(($B$66+$B$68)^2))
145	Maximum Cell Scint Area, mm2	=(B126*B130)-((4-PI())*(($B$66+$B$68)^2))
146	Minimum Cell Scint Area, mm2	=(B127*B131)-((4-PI())*(($B$66+$B$68)^2))
147		=IF(AND(B145>B144,B144>B146),"Ok","NG")
148		
149		
150	Interior Cell Dimension Tolerances for Vertical Extrusions (Thicker webs and wa	
151	Nominal Wall Thickness	4.8
152	Max Mat CondWall Thickness tolerance	0.7
153	Min Mat CondWall Thickness tolerance	-0.3
154		
155	Nominal corner Radius	9.4
156	Max Mat Cond Corner Radius tolerance	-0.3
157	Min Mat Cond Corner Radius tolerance	0.7
158	ff	1.00041111048377
159		
160		
161	Interior Cell Dimensions Based on Nominal Extrusion Outside Dimensions (Heig	
162	Nominal Cell Width, mm	=(B3 - 2*(B151) -15*(3.3))/16
163	Maximum Cell Width, mm	=B162-2*$B$153
164	Mininum Cell Width, mm	=B162-2*$B$152
165		=IF(AND(B163>B162,B162>B164),"Ok","NG")
166	Nominal Cell Height, mm	=$B$2-2*$B$151
167	Maximum Cell Height, mm	=B166-2*$B$153
168	Mininum Cell Height, mm	=B166-2*$B$152
169		=IF(AND(B167>B166,B166>B168),"Ok","NG")
170	For Nominal Radius	
171	Nominal Cell Scint Area, mm2	=(B162*B166)-((4-PI())*($B$155^2))
172	Maximum Cell Scint Area, mm2	=(B163*B167)-((4-PI())*($B$155^2))
173	Minimum Cell Scint Area, mm2	=(B164*B168)-((4-PI())*($B$155^2))
174		=IF(AND(B172>B171,B171>B173),"Ok","NG")
175	For Minimum Radius (more Scint, less PVC))	
176	Nominal Cell Scint Area, mm2	=(B162*B166)-((4-PI())*(($B$155+$B$156)^2))
177	Maximum Cell Scint Area, mm2	=(B163*B167)-((4-PI())*(($B$155+$B$156)^2))
178	Minimum Cell Scint Area, mm2	=(B164*B168)-((4-PI())*(($B$155+$B$156)^2))
179		=IF(AND(B177>B176,B176>B178),"Ok","NG")
180	For Maximum Radius (Less Scint, more PVC)	
181	Nominal Cell Scint Area, mm2	=(B162*B166)-((4-PI())*(($B$155+$B$157)^2))
182	Maximum Cell Scint Area, mm2	=(B163*B167)-((4-PI())*(($B$155+$B$157)^2))
183	Minimum Cell Scint Area, mm2	=(B164*B168)-((4-PI())*(($B$155+$B$157)^2))
184		=IF(AND(B182>B181,B181>B183),"Ok","NG")
185		
186		
187	Interior Cell Dimensions Based on Maximum Material Condition Extrusion Outsi	
188	Nominal Cell Width, mm	=B162+B35/16
189	Maximum Cell Width, mm	=B188-2*$B$153
190	Mininum Cell Width, mm	=B188-B37/16
191		=IF(AND(B189>B188,B188>B190),"Ok","NG")
192	Nominal Cell Height, mm	=$B$2-2*$B$151+B30
193	Maximum Cell Height, mm	=B192-2*$B$153
194	Mininum Cell Height, mm	=B192-2*$B$152
195		=IF(AND(B193>B192,B192>B194),"Ok","NG")
196	For Nominal Radius	
197	Nominal Cell Scint Area, mm2	**=(B188*B192)-((4-PI())*($B$155^2))**
198	Maximum Cell Scint Area, mm2	=(B189*B193)-((4-PI())*($B$155^2))
199	Minimum Cell Scint Area, mm2	=(B190*B194)-((4-PI())*($B$155^2))
200		=IF(AND(B198>B197,B197>B199),"Ok","NG")
201	For Minimum Radius	
202	Nominal Cell Scint Area, mm2	=(B188*B192)-((4-PI())*(($B$155+$B$156)^2))
203	Maximum Cell Scint Area, mm2	=(B189*B193)-((4-PI())*(($B$155+$B$156)^2))
204	Minimum Cell Scint Area, mm2	=(B190*B194)-((4-PI())*(($B$155+$B$156)^2))
205		=IF(AND(B203>B202,B202>B204),"Ok","NG")
206	For Maximum Radius	
207	Nominal Cell Scint Area, mm2	=(B188*B192)-((4-PI())*(($B$155+$B$157)^2))
208	Maximum Cell Scint Area, mm2	=(B189*B193)-((4-PI())*(($B$155+$B$157)^2))
209	Minimum Cell Scint Area, mm2	=(B190*B194)-((4-PI())*(($B$155+$B$157)^2))
210		=IF(AND(B208>B207,B207>B209),"Ok","NG")
211		
212		
213	Interior Cell Dimensions Based on Minimum Material Condition Extrusion Outsi	
214	Nominal Cell Width, mm	=B162-B37/16
215	Maximum Cell Width, mm	=B214-2*$B$153
216	Mininum Cell Width, mm	=B214-2*$B$152
217		=IF(AND(B215>B214,B214>B216),"Ok","NG")
218	Nominal Cell Height, mm	=$B$2-2*$B$151-B32
219	Maximum Cell Height, mm	=B218-2*$B$153
220	Mininum Cell Height, mm	=B218-2*$B$152
221		=IF(AND(B219>B218,B218>B220),"Ok","NG")
222	For Nominal Radius	
223	Nominal Cell Scint Area, mm2	=(B214*B218)-((4-PI())*($B$155^2))
224	Maximum Cell Scint Area, mm2	=(B215*B219)-((4-PI())*($B$155^2))
225	Minimum Cell Scint Area, mm2	=(B216*B220)-((4-PI())*($B$155^2))
226		=IF(AND(B224>B223,B223>B225),"Ok","NG")
227	For Minimum Radius	
228	Nominal Cell Scint Area, mm2	=(B214*B218)-((4-PI())*(($B$155+$B$156)^2))
229	Maximum Cell Scint Area, mm2	=(B215*B219)-((4-PI())*(($B$155+$B$156)^2))
230	Minimum Cell Scint Area, mm2	=(B216*B220)-((4-PI())*(($B$155+$B$156)^2))
231		=IF(AND(B229>B228,B228>B230),"Ok","NG")
232	For Maximum Radius	
233	Nominal Cell Scint Area, mm2	=(B214*B218)-((4-PI())*(($B$155+$B$157)^2))
234	Maximum Cell Scint Area, mm2	=(B215*B219)-((4-PI())*(($B$155+$B$157)^2))
235	Minimum Cell Scint Area, mm2	=(B216*B220)-((4-PI())*(($B$155+$B$157^2)))

Row	D	G	I	K	L	O
2				264.172051		12 mill glue line thickness
3	**DETECTOR DIMENSIONS**					295 feet long space
4	**Number of Blocks**	**38**				
5	**Number of vertical planes per "A" block**	**16**				
6	**Number of horizontal planes per "A" block**	**15**				
7	**Number of vertical planes per "B" block**	**15**				
8	**Number of horizontal planes per "B" block**	**16**				
9	**Number of extrusions per vertical plane**	**24**				
10	**Number of extrusions per horizontal plane**	**24**				
11	**Length of vertical planes, meters**	**=G13*2.54/100**				
12	**Length of horizontal planes, meters**	**=G14*2.54/100**				
13	**Length of vertical planes, inches**	**610**				
14	**Length of horizontal planes, inches**	**610**				
15	**Number of Vertical PlanesPlanes**	**=(B25*G5)+(B26*G6)**				
16	**Number of Horizontal PlanesPlanes**	**=(B25*G6)+(B26*G8)**				
17	**Number of Planes**	**=($G$4/2)*($G$5+$G$6)+($G$4/2)*($G$7+$G**				
18	**Sum of the vertical plane length, meters**	**=G15*G9*G11**				
19	**Sum of the horizontal plane lengths, meters**	**=G16*G10*G12**				
20	**Length // to beam of Bare Planes, mm**	**=G17*$B$2**				
21	**Length // to beam of Bare Planes, ft**	**=(G20/25.4)/12**				
22	**Length // to beam of Glue, ft**	**=G4*(2*G6)*B15/12**				
23	**Length of Gaps between superblocks, ft**	**=7*B20/25.4/12**				
24	**Length of Gaps between blocks within one superblock, ft**	**=(G4-7)*B16/12**				
26	**Overall Length of Detector, ft**	**=SUM(G21:G24)**				
28	**PVC Specific Gravity**	**1.49**				
29	**PVC Density (mg/m3)**	**=1000*G28**				
31	**Mass of Horizontal PVC of Nominal Dimensions, kg**	**=K82**		=G31/$G$18	kg/m	
32	**Minimum mass of Horizontal PVC, kg**	**=MIN(K82:K84,K87:K89,K92:K94,K108:K110**		=G32/$G$18	kg/m	
33	**Maximum mass of Horizontal PVC, kg**	**=MAX(K82:K84,K87:K89,K92:K94,K108:K11**		=G33/$G$18	kg/m	
35	**Mass of VERTICAL PVC of Nom. Dim., kg**	**=K171**		=G35/$G$19	kg/m	
36	**Minimum mass of VERTICAL PVC, kg**	**=MIN(K171:K173,K176:K178,K181:K183,K19**		=G36/$G$19	kg/m	
37	**Maximum mass of VERTICAL PVC, kg**	**=MAX(K171:K173,K176:K178,K181:K183,K1**		=G37/$G$19	kg/m	
39	**SUM MASS OF PVC of Nominal Dimensions, kg**	**=G31+G35**				
40	**SUM MASS OF PVC of Minimal Dimensions, kg**	**=G32+G36**				
41	**SUM MASS OF PVC of Maximal Dimensions, kg**	**=G33+G37**				
43	**Scintillator Specific Gravity**	**0.8529**				
44	**Scintillator Density (kg/m3)**	**=G43*1000**				
46	**Mass of Horizontal Scintillator of Nom. Dim., kg**	**=O82**				
47	**Minimum mass of Horizontal Scintillator, kg**	**=MIN($O$93:$O$95,$O$98:$O$100,$O$103:$**				
48	**Maximum mass of Horizontal Scintillator, kg**	**=MAX($O$93:$O$95,$O$98:$O$100,$O$103:**				
50	**Mass of VERTICAL Scintillator of Nom. Dim, kg**	**=O171**				
51	**Minimum mass of VERTICAL Scintillator, kg**	**=MIN($O$182:$O$184,$O$187:$O$189,$O$1**				
52	**Maximum mass of VERTICAL Scintillator, kg**	**=MAX($O$182:$O$184,$O$187:$O$189,$O$1**				
54	**SUM MASS OF Scintillator of Nom. Dim., kg**	**=G46+G50**				
55	**SUM MASS OF Scintillator of Min. Dim., kg**	**=G47+G51**				
56	**SUM MASS OF Scintillator of Max. Dim., kg**	**=G48+G52**				
58	**SUM Volume of Scintillator of Nom. Dim., gallons**	**=G54/$G$44*$K$2**				
59	**SUM Volume of Scintillator of Min. Dim., gallons**	**=G55/$G$44*$K$2**				
60	**SUM Volume of Scintillator of Max. Dim., gallons**	**=G56/$G$44*$K$2**				
63	**SUM MASS OF Whole detector of Nom. Dim., kg**	**=G39+G54**				
64	**SUM MASS OF Whole Detector of Min. Dim., kg**	**=G40+G55**	=G64/G63			
65	**SUM MASS OF Whole Detector of Max. Dim., kg**	**=G41+G56**	=G65/G63			
67	**Percent Active Mass of Detector of Nominal Dimensions, kg**		**=G54/(G54+G39)**			
68	**Percent Active Mass of Detector of Minimal Dimensions, kg**		**=G55/(G55+G40)**			
69	**Percent Active Mass of Detector of Maximal Dimensions, kg**		**=G56/(G56+G41)**			

Row	D	E	G	I	K	M	O
79			**Net PVC X-SECTION AREA for One 16 cell HORIZONTAL extrusion, mm2**	**Horizontal Extrusions Volume of PVC, m3**	**Horizontal Extrusions mass of PVC, kg**	**=I79**	=M79
80	**FOR ALL 16 CELLS in one HORIZONTAL Extrusion**					**Volume of Scintillator, m3**	Mass of Scintillator, kg
81	**=A81**		**=D81**	**=G81**	**=I81**	**=I81**	=M81
82	=A82	**=B82*16**	**=$B$46-E82**	=$G$19*G82/1000/1000	=I82*$G$29	=$G$19*E82/1000/1000	=M82*$G$44
83	=A83	=B83*16	=B47-E83	=$G$19*G83/1000/1000	=I83*$G$29	=$G$19*E83/1000/1000	=M83*$G$44
84	=A84	=B84*16	=B48-E84	=$G$19*G84/1000/1000	=I84*$G$29	=$G$19*E84/1000/1000	=M84*$G$44
85		=IF(AND(E83>E82,E82>E84),"Ok","NG")					
86	**=A86**		**For Minimum Radius**	**=G86**	**=I86**	**=I86**	=M86
87	=A87	=B87*16	=B51-E87	=$G$19*G87/1000/1000	=I87*$G$29	=$G$19*E87/1000/1000	=M87*$G$44
88	=A88	=B88*16	=B52-E88	=$G$19*G88/1000/1000	=I88*$G$29	=$G$19*E88/1000/1000	=M88*$G$44
89	=A89	=B89*16	=B53-E89	=$G$19*G89/1000/1000	=I89*$G$29	=$G$19*E89/1000/1000	=M89*$G$44
90		=IF(AND(E88>E87,E87>E89),"Ok","NG")					
91	**=A91**		**For Maximum Radius**	**=G91**	**=I91**	**=I91**	=M91
92	=A92	=B92*16	=B56-E92	=$G$19*G92/1000/1000	=I92*$G$29	=$G$19*E92/1000/1000	=M92*$G$44
93	=A93	=B93*16	=B57-E93	=$G$19*G93/1000/1000	=I93*$G$29	=$G$19*E93/1000/1000	=M93*$G$44
94	=A94	=B94*16	=B58-E94	=$G$19*G94/1000/1000	=I94*$G$29	=$G$19*E94/1000/1000	=M94*$G$44
95		=IF(AND(E93>E92,E92>E94),"Ok","NG")					
105			**Net PVC X-SECTION AREA for One 16 cell HORIZONTAL extrusion, mm2**	**Horizontal Extrusions Volume of PVC, m3**	**Horizontal Extrusions mass of PVC, kg**	**=I105**	=M105
106	**FOR ALL 16 CELLS in one HORIZONTAL Extrusion**					**Volume of Scintillator, m3**	Mass of Scintillator, kg
107	**=A107**		**=D107**	**=G107**	**=I107**	**=I107**	=M107
108	=A108	=B108*16	=B46-E108	=$G$19*G108/1000/1000	=I108*$G$29	=$G$19*E108/1000/1000	=M108*$G$44
109	=A109	=B109*16	=B47-E109	=$G$19*G109/1000/1000	=I109*$G$29	=$G$19*E109/1000/1000	=M109*$G$44
110	=A110	=B110*16	=B48-E110	=$G$19*G110/1000/1000	=I110*$G$29	=$G$19*E110/1000/1000	=M110*$G$44
111		=IF(AND(E109>E108,E108>E110),"Ok","NG")					
112	**=A112**		**=D112**	**=G112**	**=I112**	**=I112**	=M112
113	=A113	=B113*16	=B46-E113	=$G$19*G113/1000/1000	=I113*$G$29	=$G$19*E113/1000/1000	=M113*$G$44
114	=A114	=B114*16	=B47-E114	=$G$19*G114/1000/1000	=I114*$G$29	=$G$19*E114/1000/1000	=M114*$G$44
115	=A115	=B115*16	=B48-E115	=$G$19*G115/1000/1000	=I115*$G$29	=$G$19*E115/1000/1000	=M115*$G$44
116		=IF(AND(E114>E113,E113>E115),"Ok","NG")					
117	**=A117**		**=D117**	**=G117**	**=I117**	**=I117**	=M117
118	=A118	=B118*16	=B46-E118	=$G$19*G118/1000/1000	=I118*$G$29	=$G$19*E118/1000/1000	=M118*$G$44
119	=A119	=B119*16	=B47-E119	=$G$19*G119/1000/1000	=I119*$G$29	=$G$19*E119/1000/1000	=M119*$G$44
120	=A120	=B120*16	=B48-E120	=$G$19*G120/1000/1000	=I120*$G$29	=$G$19*E120/1000/1000	=M120*$G$44
121		=IF(AND(E119>E118,E118>E120),"Ok","NG")					
131			**Net PVC X-SECTION AREA for One 16 cell HORIZONTAL extrusion, mm2**	**Horizontal Extrusions Volume of PVC, m3**	**Horizontal Extrusions mass of PVC, kg**	**=I131**	=M131
132	**FOR ALL 16 CELLS in one HORIZONTAL Extrusion**					**Volume of Scintillator, m3**	Mass of Scintillator, kg
133	**=A133**		**=D133**	**=G133**	**=I133**	**=I133**	=M133
134	=A134	=B134*16	=B46-E134	=$G$19*G134/1000/1000	=I134*$G$29	=$G$19*E134/1000/1000	=M134*$G$44
135	=A135	=B135*16	=B47-E135	=$G$19*G135/1000/1000	=I135*$G$29	=$G$19*E135/1000/1000	=M135*$G$44
136	=A136	=B136*16	=B48-E136	=$G$19*G136/1000/1000	=I136*$G$29	=$G$19*E136/1000/1000	=M136*$G$44
137		=IF(AND(E135>E134,E134>E136),"Ok","NG")					
138	**=A138**		**=D138**	**=G138**	**=I138**	**=I138**	=M138
139	=A139	=B139*16	=B46-E139	=$G$19*G139/1000/1000	=I139*$G$29	=$G$19*E139/1000/1000	=M139*$G$44
140	=A140	=B140*16	=B47-E140	=$G$19*G140/1000/1000	=I140*$G$29	=$G$19*E140/1000/1000	=M140*$G$44
141	=A141	=B141*16	=B48-E141	=$G$19*G141/1000/1000	=I141*$G$29	=$G$19*E141/1000/1000	=M141*$G$44
142		=IF(AND(E140>E139,E139>E141),"Ok","NG")					
143	**=A143**		**=D143**	**=G143**	**=I143**	**=I143**	=M143
144	=A144	=B144*16	=B46-E144	=$G$19*G144/1000/1000	=I144*$G$29	=$G$19*E144/1000/1000	=M144*$G$44
145	=A145	=B145*16	=B47-E145	=$G$19*G145/1000/1000	=I145*$G$29	=$G$19*E145/1000/1000	=M145*$G$44
146	=A146	=B146*16	=B48-E146	=$G$19*G146/1000/1000	=I146*$G$29	=$G$19*E146/1000/1000	=M146*$G$44
147		=IF(AND(E145>E144,E144>E146),"Ok","NG")					
168			**Net PVC X-SECTION AREA for One 16 cell HORIZONTAL extrusion, mm2**	**Vertical Extrusions Volume of PVC, m3**	**Vertical Extrusions mass of PVC, kg**	**=I168**	=M168
169	**FOR ALL 16 CELLS in one Vertical Extrusion**					**Volume of Scintillator, m3**	Mass of Scintillator, kg
170	**=A170**		**=D170**	**=G170**	**=I170**	**=I170**	=M170
171	=A171	**=B171*16**	**=$B$46*$B$158-E171**	=$G$18*G171/1000/1000	=I171*$G$29	=$G$18*E171/1000/1000	=M171*$G$44
172	=A172	=B172*16	=$B$47*$B$158-E172	=$G$18*G172/1000/1000	=I172*$G$29	=$G$18*E172/1000/1000	=M172*$G$44
173	=A173	=B173*16	=$B$48*$B$158-E173	=$G$18*G173/1000/1000	=I173*$G$29	=$G$18*E173/1000/1000	=M173*$G$44
174		=IF(AND(E172>E171,E171>E173),"Ok","NG")					
175	**=A175**		**For Minimum Radius**	**=G175**	**=I175**	**=I175**	=M175
176	=A176	=B176*16	=$B$46*$B$158-E176	=$G$18*G176/1000/1000	=I176*$G$29	=$G$18*E176/1000/1000	=M176*$G$44
177	=A177	=B177*16	=$B$47*$B$158-E177	=$G$18*G177/1000/1000	=I177*$G$29	=$G$18*E177/1000/1000	=M177*$G$44
178	=A178	=B178*16	=$B$48*$B$158-E178	=$G$18*G178/1000/1000	=I178*$G$29	=$G$18*E178/1000/1000	=M178*$G$44
179		=IF(AND(E177>E176,E176>E178),"Ok","NG")					
180	**=A180**		**For Maximum Radius**	**=G180**	**=I180**	**=I180**	=M180
181	=A181	=B181*16	=$B$46*$B$158-E181	=$G$18*G181/1000/1000	=I181*$G$29	=$G$18*E181/1000/1000	=M181*$G$44
182	=A182	=B182*16	=$B$47*$B$158-E182	=$G$18*G182/1000/1000	=I182*$G$29	=$G$18*E182/1000/1000	=M182*$G$44
183	=A183	=B183*16	=$B$48*$B$158-E183	=$G$18*G183/1000/1000	=I183*$G$29	=$G$18*E183/1000/1000	=M183*$G$44
184		=IF(AND(E182>E181,E181>E183),"Ok","NG")					
194			**Net PVC X-SECTION AREA for One 16 cell HORIZONTAL extrusion, mm2**	**Vertical Extrusions Volume of PVC, m3**	**Vertical Extrusions mass of PVC, kg**	**=I194**	=M194
195	**FOR ALL 16 CELLS in one Vertical Extrusion**					**Volume of Scintillator, m3**	Mass of Scintillator, kg
196	**=A196**		**=D196**	**=G196**	**=I196**	**=I196**	=M196
197	=A197	=B197*16	=$B$46*$B$158-E197	=$G$18*G197/1000/1000	=I197*$G$29	=$G$18*E197/1000/1000	=M197*$G$44
198	=A198	=B198*16	=$B$47*$B$158-E198	=$G$18*G198/1000/1000	=I198*$G$29	=$G$18*E198/1000/1000	=M198*$G$44
199	=A199	=B199*16	=$B$48*$B$158-E199	=$G$18*G199/1000/1000	=I199*$G$29	=$G$18*E199/1000/1000	=M199*$G$44
200		=IF(AND(E198>E197,E197>E199),"Ok","NG")					
201	**=A201**		**=D201**	**=G201**	**=I201**	**=I201**	=M201
202	=A202	=B202*16	=$B$46*$B$158-E202	=$G$18*G202/1000/1000	=I202*$G$29	=$G$18*E202/1000/1000	=M202*$G$44
203	=A203	=B203*16	=$B$47*$B$158-E203	=$G$18*G203/1000/1000	=I203*$G$29	=$G$18*E203/1000/1000	=M203*$G$44
204	=A204	=B204*16	=$B$48*$B$158-E204	=$G$18*G204/1000/1000	=I204*$G$29	=$G$18*E204/1000/1000	=M204*$G$44
205		=IF(AND(E203>E202,E202>E204),"Ok","NG")					
206	**=A206**		**=D206**	**=G206**	**=I206**	**=I206**	=M206
207	=A207	=B207*16	=$B$46*$B$158-E207	=$G$18*G207/1000/1000	=I207*$G$29	=$G$18*E207/1000/1000	=M207*$G$44
208	=A208	=B208*16	=$B$47*$B$158-E208	=$G$18*G208/1000/1000	=I208*$G$29	=$G$18*E208/1000/1000	=M208*$G$44
209	=A209	=B209*16	=$B$48*$B$158-E209	=$G$18*G209/1000/1000	=I209*$G$29	=$G$18*E209/1000/1000	=M209*$G$44
210		=IF(AND(E208>E207,E207>E209),"Ok","NG")					
220			**Net PVC X-SECTION AREA for One 16 cell HORIZONTAL extrusion, mm2**	**Vertical Extrusions Volume of PVC, m3**	**Vertical Extrusions mass of PVC, kg**	**=I220**	=M220
221	**FOR ALL 16 CELLS in one Vertical Extrusion**					**Volume of Scintillator, m3**	Mass of Scintillator, kg
222	**=A222**		**=D222**	**=G222**	**=I222**	**=I222**	=M222
223	=A223	=B223*16	=$B$48*$B$158-E223	=$G$18*G223/1000/1000	=I223*$G$29	=$G$18*E223/1000/1000	=M223*$G$44
224	=A224	=B224*16	=$B$48*$B$158-E224	=$G$18*G224/1000/1000	=I224*$G$29	=$G$18*E224/1000/1000	=M224*$G$44
225	=A225	=B225*16	=$B$48*$B$158-E225	=$G$18*G225/1000/1000	=I225*$G$29	=$G$18*E225/1000/1000	=M225*$G$44
226		=IF(AND(E224>E223,E223>E225),"Ok","NG")					
227	**=A227**		**=D227**	**=G227**	**=I227**	**=I227**	=M227
228	=A228	=B228*16	=$B$48*$B$158-E228	=$G$18*G228/1000/1000	=I228*$G$29	=$G$18*E228/1000/1000	=M228*$G$44
229	=A229	=B229*16	=$B$48*$B$158-E229	=$G$18*G229/1000/1000	=I229*$G$29	=$G$18*E229/1000/1000	=M229*$G$44
230	=A230	=B230*16	=$B$48*$B$158-E230	=$G$18*G230/1000/1000	=I230*$G$29	=$G$18*E230/1000/1000	=M230*$G$44
231		=IF(AND(E229>E228,E228>E230),"Ok","NG")					
232	**=A232**		**=D232**	**=G232**	**=I232**	**=I232**	=M232
233	=A233	=B233*16	=$B$48*$B$158-E233	=$G$18*G233/1000/1000	=I233*$G$29	=$G$18*E233/1000/1000	=M233*$G$44
234	=A234	=B234*16	=$B$48*$B$158-E234	=$G$18*G234/1000/1000	=I234*$G$29	=$G$18*E234/1000/1000	=M234*$G$44
235	=A235	=B235*16	=$B$48*$B$158-E235	=$G$18*G235/1000/1000	=I235*$G$29	=$G$18*E235/1000/1000	=M235*$G$44