Fermilab

Revision 1.0

~~1/21/1999~~
1/26/07

Particle Physics Division
Engineering and Technical Teams

Mechanical Support Engineering Note

Number: MD-ENG-120 Date: 1/26/2007

Project: Minerva Project Internal Reference:

Title: Prototype detector support stand

Author(s): Jim Kilmer

Reviewer(s): Dave Pushka 1 FEB '07

Key Words:

Abstract/Summary:

This note is the engineering note for the structural calculations for the Minerva Prototype support stand for the detector frames. The purpose of this stand is to support frames after they are constructed for testing and storage. The system is very similar to the stands used for the assembly of the Minos Near Detector.

Applicable Codes:
American Institute of Steel Construction, Inc, Manual of Steel Construction, Ninth Edition.

Support stand for Minerva construction and prototyping
Jim Kilmer
March 8, 2006

This note describes the engineering calculations for the support structures used in Minerva to build and store the detector. The initial stand is recycled from use as a Minos storage rack used in New Muon Lab. This stand is too short in height for Minerva and the columns have been lengthened. Additionally the lengtl of the rails is shorter by two feet than in the production stands that are planned. The rest of these stands will be bought new and will not have spliced columns. First note that the Minos detector had planes weighing 8000 pounds with a regular spacing of 2.334 inches for a rail load of 3427.6 lb/in. We need to determine the load for the Minerva detector. The Minerva detector is made of several kinds of different planes. Here are the weights of the various types of plane.

Plane Type	Weight (lb)
Upstream HCAL	3000 lb
Lead Module	
Upstream ECAL	3000 lb
Active target	3000 lb
Downstream ECAL	3000 lb
Downstream HCAL	4500 lb
Heavy target frame	5200 lb

Use 5200 pounds with a spacing of1.594 inches for the entire rail. This gives a load of 3262 lb/in and is very conservative as there are only three frames of this weight in the entire detector. Nominally since the detector is lighter than its original loading everything is fine. Some calculations will need to be redone for the changes. For these calculations use the American Institute of Steel Construction, Manual of Steel Construction, Ninth Edition.

Columns

The rails are 96 inches long supported by three columns on each side. Assume that all of the planes are the heaviest giving a load of 3262 lb/in. Then the total load would be

$$Wt := 3262 \cdot \frac{lb}{in} \cdot 96 \cdot in$$

$$Wt = 3.132 \times 10^5 \, lb$$

To get the load on the columns use page 2-311 with 2 spans and a uniform load. Also notethat the weight shown above is equally divided between the two rails The columns are made from W8 X 31

or W8 X 35 wide flange beams. Use W8 X 31 for these calculations and the cross sectional area is 9.13 square inches. Columns are also A-36 material with an Fyof 36 ksi.

$$P := \frac{3262 \cdot \frac{lb}{in} \cdot 48 \cdot in}{2}$$

P is the load on one span on one rail which is half of the rail length and only the load on one side

The maximum load on a column is the center column with a load of 1.172 X P or 91,753 lbs.

$$\sigma comp := \frac{1.172P}{9.13 \cdot in^2}$$

$$\sigma comp = 1.005 \times 10^4 \frac{lb}{in^2}$$

Compressive stress on column

While the columns have sway bracing in both directions assume that there is none. From the AISC code assume that the factor K=2.0 (Table C-C2.1) and the length of the columns is 104 inches (use 9 feet). Then Kl is 2X9 = 18 feet for Y-Y axis and using the column tables for W8 X31 column the allowable load is given as 110 kips > 92 kip so the column is OK.

Next check X-X axis. Effective length is again 2X9 = 18 feet. From the properties tables rx/ry = 1.72. Then corresponding effective length for X-X is then

$$\frac{18 \cdot ft}{1.72} = 10.465\, ft$$

Looking again at the column tables for a W8 X31 with 11 foot effective length the column allowable load is given as 154 kip > 92 kip so the column choice of W8 X31 is OK. Note that because the columns do have some sway bracing the real effective lengths are less and the columns would be rated for larger loads.

Some of these columns also have a two foot piece attached to lengthen them for the final height needed. This connection will be addressed later in this note. It was necessary to add material to be able to re-use steel that was originally used in a Minos Near Detector storage rack at New Muon Lab. Enough material was salvaged for only one rack. All of the others will have full length columns with no splices

Rails

The rails are a composite of three elements. The first is a W18 X35 Ibeam. The second is a C8 X 11.5 channel used to prevent the Ibeam upper flange from buckling under the compressive load. The last is a 4 inch by 4 inch bar used as the actual support rail for the planes. It forms the alignment key for the detector on the rail. At the beginning assume that the Ibeam is the only rail section. Use Case 1 on page 2-296 for a simple beam with uniform load. Find the maximum moment.

$L := 48 \cdot in$ Length between columns on center

$$w := \frac{3262 \cdot \frac{lb}{in}}{2}$$ Load is shared with the two side rails

$$Mmax := \frac{w \cdot l^2}{8}$$

$$Mmax = 4.697 \times 10^5 \, lb \cdot in$$

For a W18 X35 beam $Sx := 57.6 \cdot in^3$

$$fb := \frac{Mmax}{Sx} \qquad fb = 8.155 \times 10^3 \frac{lb}{in^2}$$ Rail bending stress

Assume that this is the allowable bending stress

$$Fy := 36000 \cdot \frac{lb}{in^2} \qquad Fb := 0.66 \cdot Fy \qquad Fb = 2.376 \times 10^4 \frac{lb}{in^2}$$

Since Fb is greater than fb the beam stress is OK.

Calculate first the Ixx for the entire assembly of the rail.

	A (sq in)	x(in)	Ax (in^3)	Ix (in^4)	d (in)	Ad^2	
bar	16.00	19.97	319.52	21.33	4.15	275.56	
channel	3.38	17.40	58.81	1.32	1.36	6.24	
Ibeam	10.30	8.88	91.41	510.00	6.95	496.80	
	29.68		469.74				
					Sum of Ad^2	778.60	in^4
	neutral x=	15.83	in		Sum of Ix	532.65	in^4
					Combined Ixx	1311.25	in^4

Check bending stress and deflection with combined rail section:

$$E := 30 \times 10^6 \cdot \frac{lb}{in^2} \qquad Ixx := 1311.25 \cdot in^4$$

$$fbnew := \frac{Mmax \cdot 15.83 \cdot in}{1311.25 \cdot in^4} \qquad fbnew = 5.671 \times 10^3 \frac{lb}{in^2}$$

New bending stress is much lower. Now look at deflection which is important to make sure items like axial bolts line up along the beam. The deflection formula is taken from the AISC code page 2-308.

$\Delta := 0.0069 \cdot \frac{w \cdot l^4}{E \cdot Ixx}$ $\Delta = 1.519 \times 10^{-3}\,in$

This deflection is quite acceptable. Now look at shear in the beam assembly. To estimate the shear look at case 12 on page 2-299. In the model the shear at the center column would be twice the shear shown in case 12 or 10/8 X P.

$V := 1.2 \cdot P$ $V = 9.395 \times 10^4\,lb$

Then

$\sigma shear := \frac{V}{29.68 \cdot in^2}$ $\sigma shear = 3.165 \times 10^3 \frac{lb}{in^2}$

From the AISC code the maximum allowable shear stress is 40% of Fy or 14,400 psi. This calculated shear stress is acceptable so the composite beam is OK.

Column Splices

As mentioned above some of these columns are spliced. The splice design is that the extra piece of Ibeam is added on top of the previous top bolting plate with a fillet weld all around the perimeter of the new piece. Additionally the flanges are stiffened by adding a 1/2" thick by 7"wide by 8" long plate to the outside of each flange. A 1/2" thick fillet weld is done all around the plate. Attached is a drawing of the splice design, Fermilab number 3938.300-MC-444191, with notations for this analysis.

To check on this connection assume as a worst case that the original beam is held rigidly and the extra two feet is cantilevered. Find what moment these stiffening plates can support assuming that the fillet weld around the web and inner flanges is not considered. Then in the strong axis direction a force F produces a moment around a point A, resisted by the plate's weld.

Total weld length $lw := 4 \cdot in + 7 \cdot in + 4 \cdot in$ $lw = 15\,in$

Weld Throat $tw := .5 \cdot \frac{in}{\sqrt{2}}$ $tw = 0.354\,in$

Weld Shear Area $Aw := lw \cdot tw$ $Aw = 5.303\,in^2$

Now find out what the force F would be, first looking in the direction for the beam strong axis.

$Fr := Aw \cdot 23300 \cdot \frac{lb}{in^2}$ Where Fr is the resisting force and weld allowable stress is 1/3 of 70 ksi for allowable shear or 23,300 psi

$Fr = 1.236 \times 10^5\,lb$

Sum moments around point A.

$F := Fr \cdot 8 \cdot \frac{in}{24 \cdot in}$ $\qquad F = 4.119 \times 10^4\ lb$

This should also be approximately the force the splice plate can resist in bending for the weak axis. Now we need to decide if this is acceptable. From the first page note that the entire load on the rails is 313,200 lbs. If we assume that the force is horizontal for a siesmic event and for this siesmic zone (0) should be 10% of the total weight (31,320 lbs) then the bending force we calculate the columns will each resist is greater that the required siesmic load for the frame and the splice is OK.

This 10% horizontal load is also used to look at the design of the braces. These braces are made from 4" by 4" by 0.375" wall structural tubing. The load hrizontally will be shared by three braces across the support. Then Fhor is only 10,440 pounds on each brace.

$Abrace := 5.08 \cdot in^2$ Cross sectional area of brace

$r := 1.45$

$K := 2$ Flanged ends but not rigid support

$lbrace := 85.5 \cdot in$ length of the brace

$\frac{K \cdot lbrace}{l} = 3.563$

Using table C-50 from page 3-17for this Kl/r we find Fa=29.73 Ksi. Now find the actual compressive stress in the brace.

$fabrace := \frac{10440 lb}{Abrace}$

$fabrace = 2.055 \times 10^3 \frac{lb}{in^2}$

Since Fa>fabrace the brace is OK in compression. Note also that no account is taken of the opposing braces that will try to resist the load in tension, which would be the case after the detector is in place on the rails. This horizontal load on each brace is carried through to the anchor bolts as shear forces. Each brace has four 3/4" - 10 anchor bolts in the floor using Hilti Drop-in anchors. For 4000 psi concrete the stainless steel drop in anchors will support 3830 pounds in tension and 5580 pounds in shear.

$Fanchor := \frac{10440 \cdot lb}{4}$ $\qquad Fanchor = 2.61 \times 10^3\ lb$

The force Fanchor is taken up in shear and the allowable load is greater than the required load so the anchors are OK.

REV	DESCRIPTION	DRAWN	DATE
		APPROVED	DATE
A	ADDED ITEM 3 P/N,	G. SMITH	12-27-06
	ADDED ITEM 5	B. CYKO	12-27-06

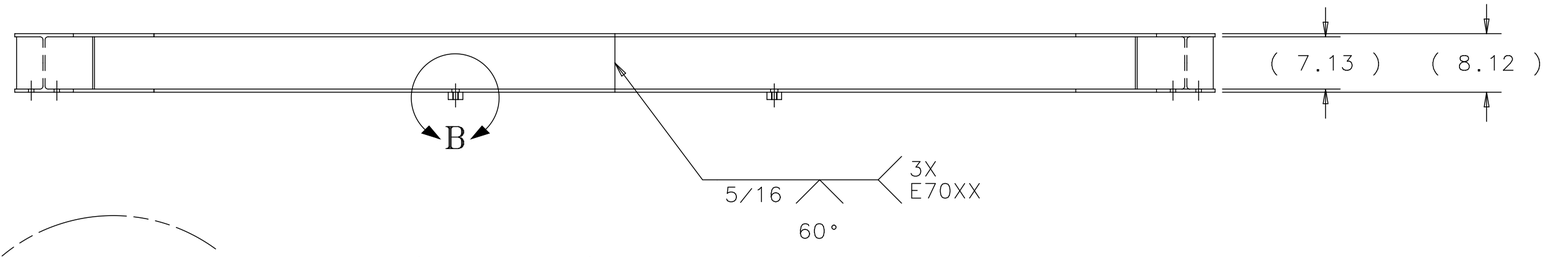

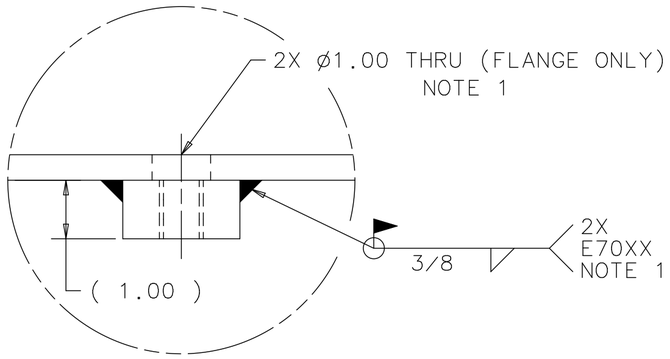

DETAIL VIEW B
SCALE :1/2

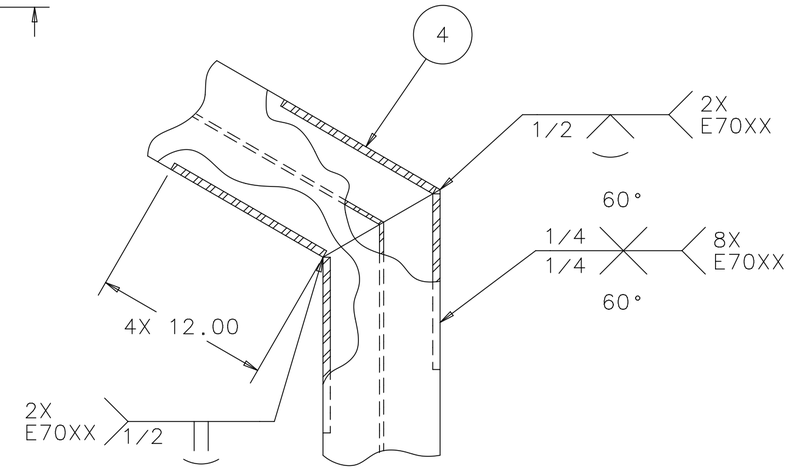

DETAIL A
SCALE: 1/8

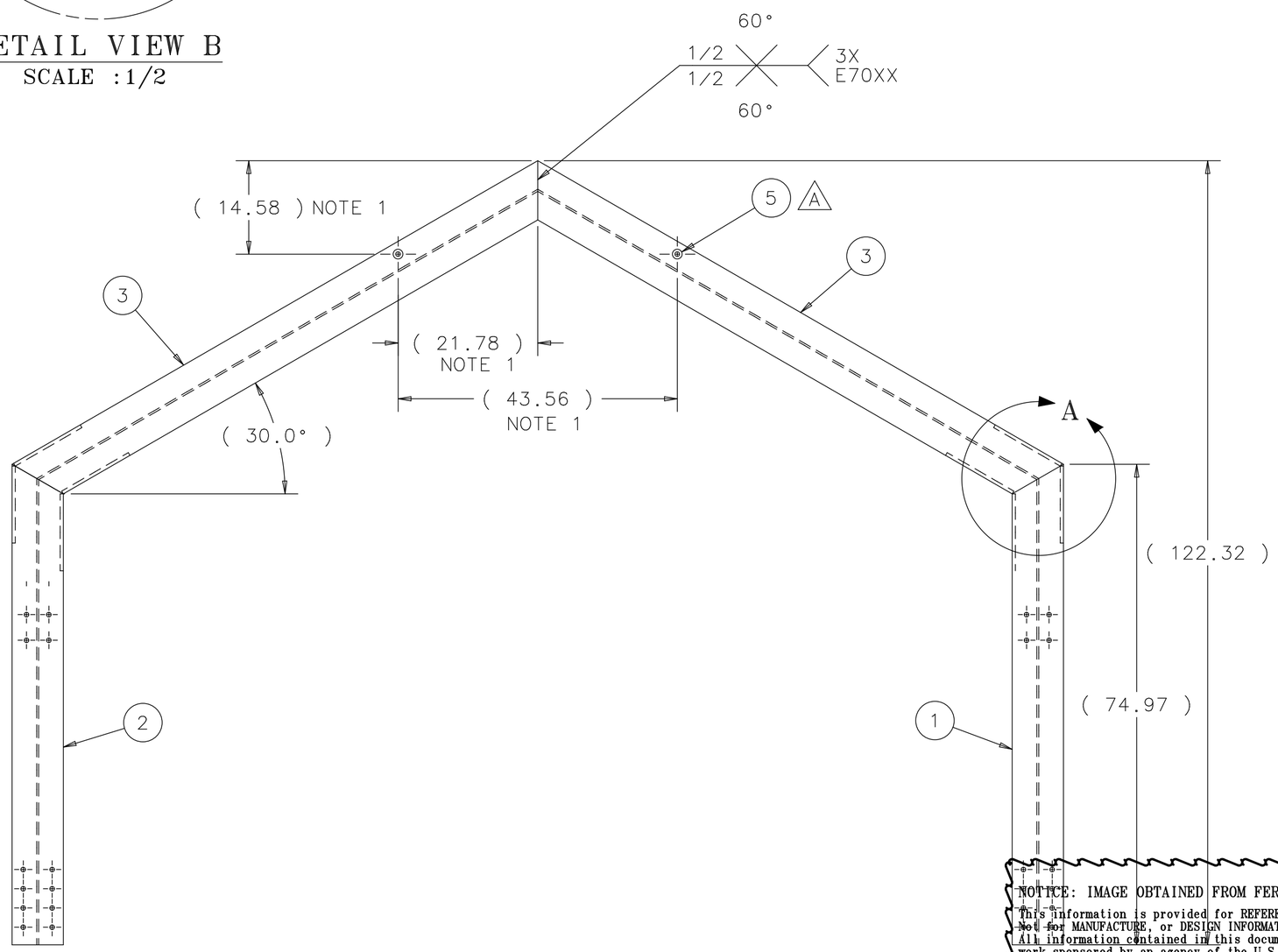

NOTE :
1. FINAL LOCATION OF BOSS AND HOLE TO BE DETERMINED AT ASSEMBLY.

ITEM	PART NO.	DESCRIPTION OR SIZE	QTY.
5	MB-444273	BOSS-TARGET SUPPORT FRAME	2
4	COML	STIFFENER PLATE-ASTM A36 STEEL 12 X 7.13 X .50 THICK	8
3	MC-435687	DIAGONAL BEAM, BOOKEND	2
2	MC-435685	L.H. COLUMN	1
1	MC-435683	R.H. COLUMN	1

PARTS LIST

UNLESS OTHERWISE SPECIFIED			ORIGINATOR	J.KILMER	05-JAN-2006
.XX	.XXX	ANGLES	DRAWN	W.CYKO	05-JAN-2006
± .01	± ---	± ---	CHECKED	W.CYKO	08-DEC-2006
			APPROVED	J.KILMER	08-DEC-2006

1. BREAK ALL SHARP EDGES --- MAX.
2. DO NOT SCALE DRAWING.
3. DIMENSIONS BASED UPON ASME Y14.5M-1994
4. MAX. ALL MACH. SURFACES ---
5. DRAWING UNITS: U.S. INCH

USED ON: ME-444204

MATERIAL: SEE PARTS LIST ABOVE

FERMI NATIONAL ACCELERATOR LABORATORY
UNITED STATES DEPARTMENT OF ENERGY

MINERVA-DETECTOR-MECHANICAL PLANE SUPPORT FRAME BOOKEND WELDMENT

SCALE	DRAWING NUMBER	SHEET	REV
1/16& AS NOTED	3938.330-MC-435682	1 OF 1	A

CREATED WITH : Ideas12NXSeries | GROUP: PPD/MECHANICAL DEPARTMENT

NOTICE: IMAGE OBTAINED FROM FERMILAB WEB SITE
This information is provided for REFERENCE use only.
Not for MANUFACTURE, or DESIGN INFORMATION.
All information contained in this document represents work sponsored by an agency of the U.S. Government. Neither the U.S. Government nor any agency thereof, nor Universities Research Association, Inc., nor any of their employees or officers, makes any warranty, express or implied, or assumes any legal liability or responsibility for the accuracy, completeness, or usefulness of any information, apparatus, product or process disclosed, or represents that its use would not infringe privately owned rights.

REV	DESCRIPTION	DRAWN	DATE
		APPROVED	DATE

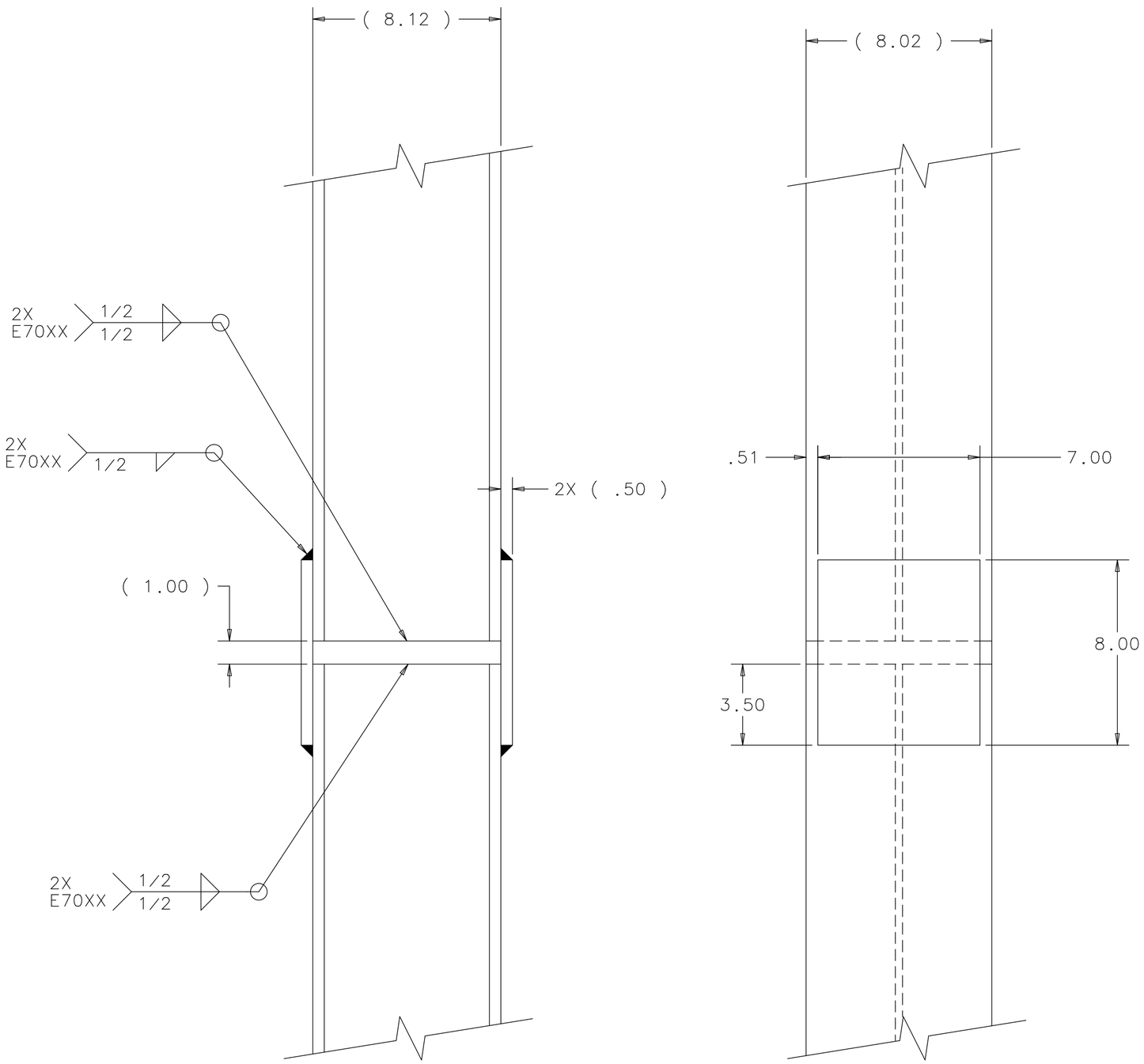

UNLESS OTHERWISE SPECIFIED			ORIGINATOR	J.KILMER	02-NOV-2006
.XX	.XXX	ANGLES	DRAWN	G.SMITH	02-NOV-2006
± .06	± ---	± ---	CHECKED	W.CYKO	02-NOV-2006
			APPROVED	J.KILMER	02-NOV-2006

1. BREAK ALL SHARP EDGES .015 MAX.
2. DO NOT SCALE DRAWING.
3. DIMENSIONS BASED UPON ASME Y14.5M-1994
4. MAX. ALL MACH. SURFACES 250
5. DRAWING UNITS: U.S. INCH

USED ON

MATERIAL: ASTM-A36 STEEL

FERMI NATIONAL ACCELERATOR LABORATORY
UNITED STATES DEPARTMENT OF ENERGY

MINERVA-MECHANICAL DETECTOR PROTOTYPE STAND COLUMN SPLICE

SCALE	DRAWING NUMBER	SHEET	REV
1:4	3938.300-MC-444191	1 OF 1	

CREATED WITH : Ideas12NXSeries | GROUP: PPD/MECHANICAL DEPARTMENT

NOTICE: IMAGE OBTAINED FROM FERMILAB WEB SITE

This information is provided for REFERENCE use only. Not for MANUFACTURE, or DESIGN INFORMATION. All information contained in this document represents work sponsored by an agency of the U.S. Government. Neither the U.S. Government nor any agency thereof, nor Universities Research Association, Inc., nor any of their employees or officers, makes any warranty, express or implied, or assumes any legal liability or responsibility for the accuracy, completeness, or usefulness of any information, apparatus, product or process disclosed, or represents that its use would not infringe privately owned rights.

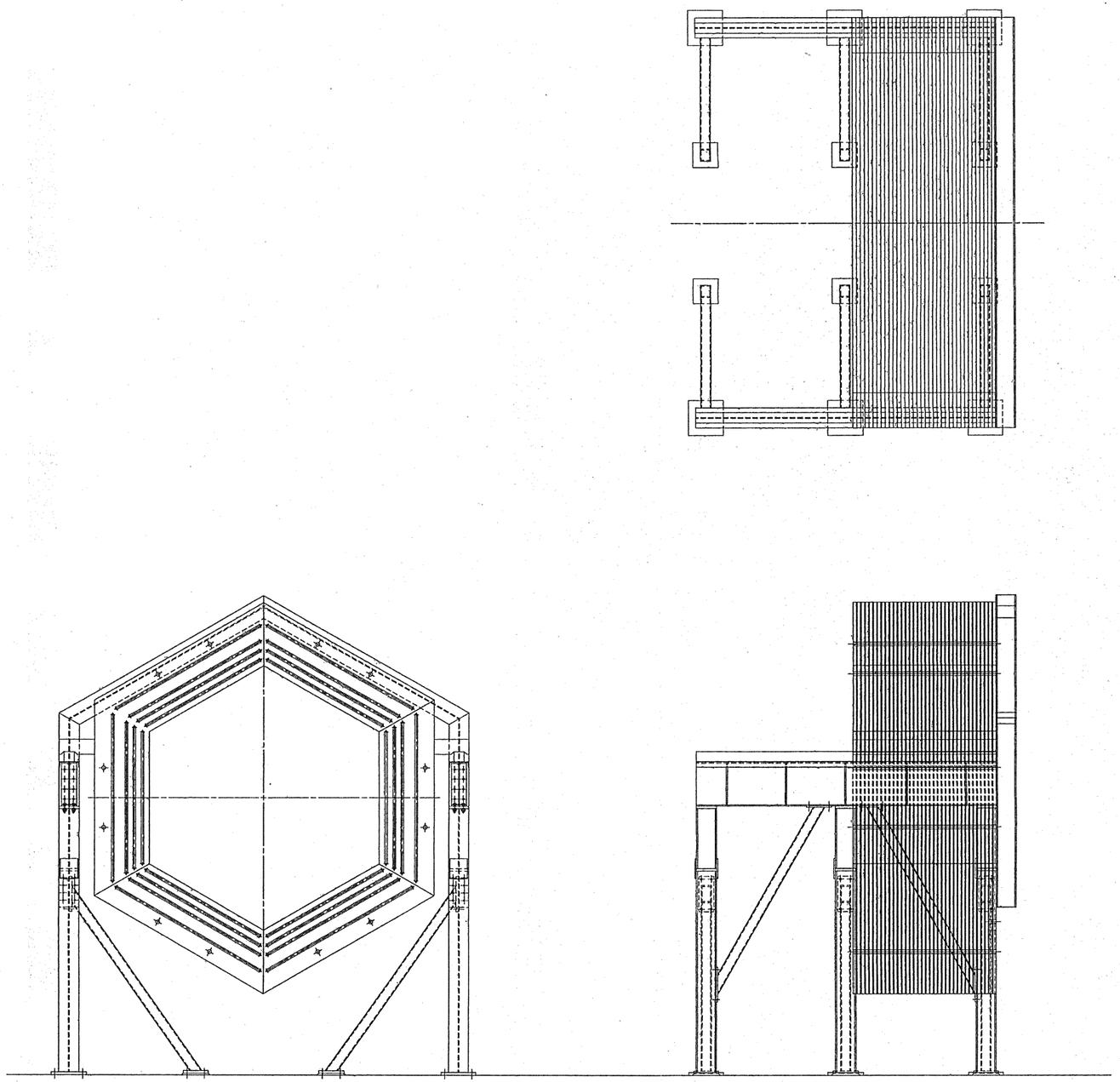

REV	DESCRIPTION	DRAWN	DATE
		APPROVED	DATE

UNLESS OTHERWISE SPECIFIED			ORIGINATOR	J.KILMER	26-JAN-2007
.XX	.XXX	ANGLES	DRAWN	W.CYKO	26-JAN-2007
± .03	± ---	± ---	CHECKED	C.GROZIS	26-JAN-2007
			APPROVED	J.KILMER	26-JAN-2007

1. BREAK ALL SHARP EDGES .015 MAX.
2. DO NOT SCALE DRAWING.
3. DIMENSIONS BASED UPON ASME Y14.5M 1994
4. MAX. ALL MACH. SURFACES 250/
5. DRAWING UNITS: INCHES

USED ON

MATERIAL

FERMI NATIONAL ACCELERATOR LABORATORY
UNITED STATES DEPARTMENT OF ENERGY

MINERVA - MECHANICAL
DETECTORS
PLANE & STAND GENERAL ARRANGMNT

SCALE	DRAWING NUMBER	SHEET	REV
1:16	3938.300-ME-444422	1 OF 1	

CREATED WITH : Ideas12NXSeries | GROUP: PPD/MECHANICAL DEPARTMENT