Fermilab

Particle Physics Division

12-01-01

Mechanical Department Engineering Note

Number: MD-Eng-~~083~~ 116

Date: February 14, 2006

Project: ILC

Project Internal Reference:

Title: New Muon Lab South Crane Auxiliary Hoist Modification

Author(s): Robert J. Woods

Reviewer(s): 2-24-06

Key Words: New Muon Lab, Crane Modification, Hoist Installation

Abstract/Summary:

The New Muon Lab south, 25 ton capacity building crane had a 7.5 ton capacity hoist connected to the bottom of the idler girder. This hoist was removed in 1999 but the support brackets, which were welded to both sides of the girder, were left intact. This calculation investigates reusing these existing brackets to install a new support system for a rail and two manual hoists. The total lifted load will not exceed 6700 pounds; however the hoist support rail will not be centered under the idler girder as the original hoist was. The centerline of the new hoist rail will be approximately 30 inches from the edge of the idler girder.

Applicable Codes:

1. AISC Manual of Steel Construction, Allowable Stress Design, Ninth Edition

HEAT EXCHANGER = 6,000# (WEIGHED BY M. MACHONE 2/14/06)
PIPING = 700#

6700# TOTAL LIFTED WEIGHT

DIAMETER OF HEAT EXCHANGER = 20"

LENGTH = 413" W/O PIPING

TOP OF HEAT EXCHANGER = $754.9583 + \left(\frac{12.5+20}{12}\right)$

$= 757.6667'$

$= 757'-8"$

B/CRANE = 761'-1"

TOTAL CLEARANCE = 761-1 - 757-8

$= 3.4167'$

$= 3'-5"$

CRANE:

FROM ORLEY MEYER DRAWING # 01-300-250:

DISTANCE FROM ℄ SOUTH BRIDGE BEAM TO END BUMPER =

18" + 15¼" = 33¼"

FROM FERMI DRAWING 555 OF PROJECT 8-2-76 DETAIL "G"

DISTANCE FROM COLUMN LINE 1 TO ℄ CRANE STOP =

1'-9"

CRANE STOP = W 8x31 D = 8"

TOTAL DISTANCE, COLUMN LINE 1 TO ℄ BRIDGE BEAM =

33¼" + 1'-9" + 8"/2 = 58.25"

DISTANCE FROM END OF CRANE BRIDGE BEAM TO SOUTH END OF BRIDGE BEAM = 10" (FIELD MEASURE.)

58.25 − 10 = 48.25" FROM COL. LINE 1

HEAT EXCHANGER SUPPORT:

FROM FERM DRAWING 8-2-169 SHEET S-1:

DISTANCE FROM ℄ HEAT EXCHANGER SUPPORT TO COLUMN LINE 1 = 1'-9"/2 + 1/4" + 12 1/4/2

= 16.875" ✓

TOTAL DISTANCE FROM SOUTH EDGE OF BRIDGE BEAM TO ℄ HEAT EXCHANGER = 48.25 − 16.875

= 31.375"

DISTANCE FROM EDGE OF BRIDGE TO ℄ BOLTS = 2 1/4" (FIELD MEASUREMENT)

TOTAL CANTILEVER SPAN = 31.375 − 2.25

= 29.125"

USING 3/4" ϕ A325 BOLTS F_u = 120 KSI (GRADE 8 F_u = 150 KSI)

F_T = 44.0 KSI (AISC TABLE J 3.2 P. 5-73)

P_{MAX} = 44.0 ((0.75)²(π)/4)

= 19.4 K/BOLT

FOR 2 BOLT CONNECTION:

P_{MAX} = 19.4 × 2

= 38.8 K = 38,800 #

NEW HOIST SUPPORT:

CANTILEVER SPAN = 29.125" (FROM P. 2 THIS CALC)

DESIGN FOR 35" CANTILEVER FOR POSITIONING

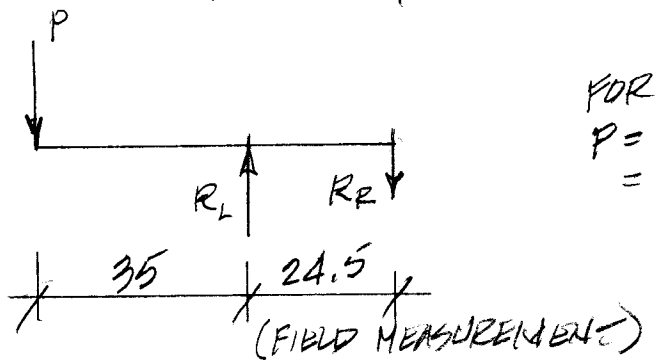

FOR 2 HOISTS,
$P = 6700/2$
$= 3350\#$

$R_L = 3350(35+24.5)/24.5$
$= 8136\# \uparrow$

$R_R = 3350(35)/24.5$
$= 4786\# \downarrow$

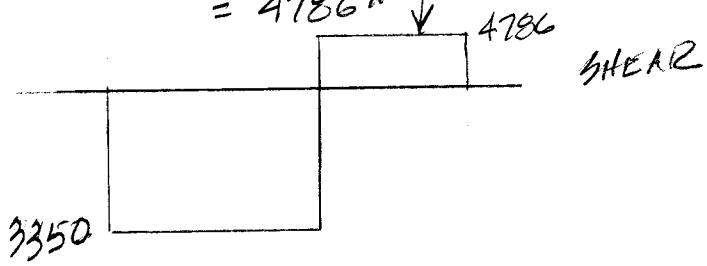

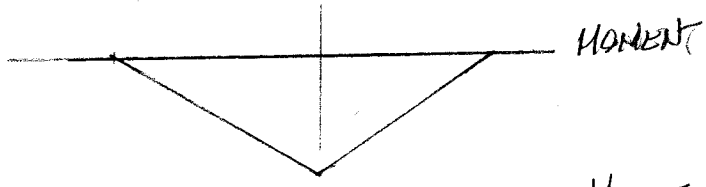

$M_{MAX} = 35(3350)$
$= 117250$ #-IN

FOR $F_b = 0.66 F_y$
$= 0.66(36)$
$= 23.7$ KSI

$S_{X\,MIN} = 117250/23700$
$= 4.95 \text{ IN}^3$

IN ORDER TO MATCH UP WITH EXISTING BRACKET ON BOTTOM OF CRANE, BEAM FLANGE SHOULD BE 8" WIDE

LIGHTEST BEAM = W8x31

$b_x = 27.5'' > 4.95$ ok

$L_c = 8.5'$ (P. 2-71 AISC)

$L_b = 35'' = 2.9' < L_c$

$\therefore F_b = 0.66F_y$ ok

TROLLY SUPPORT BEAM:

MAX SPAN = 97" (FIELD MEASUREMENT)

$M_{MAX} = 3350(97)/4 = 81238$ #-IN

TRY S 5x10 $b_x = 4.92$

$L_c = 3.2$ $L_b = 97/12 = 8.1$

$L_y = 9.1$

$L_c < L_b < L_y \therefore$

$$F_b = \frac{12\times10^3 C_b}{Ld/A_f} = \frac{12\times10^3}{97(5.10)}$$

$= 24.3$ KSI

$F_b = 0.60F_y = 0.60(36)$
$= 21.6$ KSI USE

$f_b = 81238/4.92 = 16,511$ PSI

$f_b < F_b$ ok

CHECK EXISTING BRACKET:

BOTTOM PLATE OF BRACKET = 4½" x 8"
(FIELD MEASUREMENT)

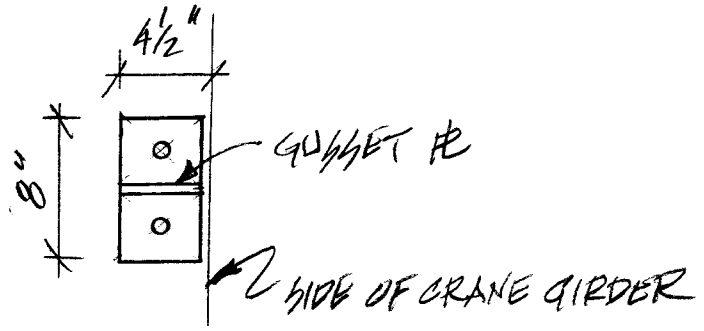

TOP VIEW OF BRACKET

ASSUME 3" OF WELD EFFECTIVE EACH SIDE OF GUSSET PLATE TO BOTTOM PLATE:

FOR E70XX ELECTRODE AND ¼" WELD:

ALLOWABLE LOAD = 0.3(0.707) 4/16 (70,000)(3")(2)
= 22,270# > 8136# OK

∴ CONNECTION TO EXISTING BRACKET OK
USING 2 - ¾"Ø GRADE 8 BOLTS
@ EA. BRACKET

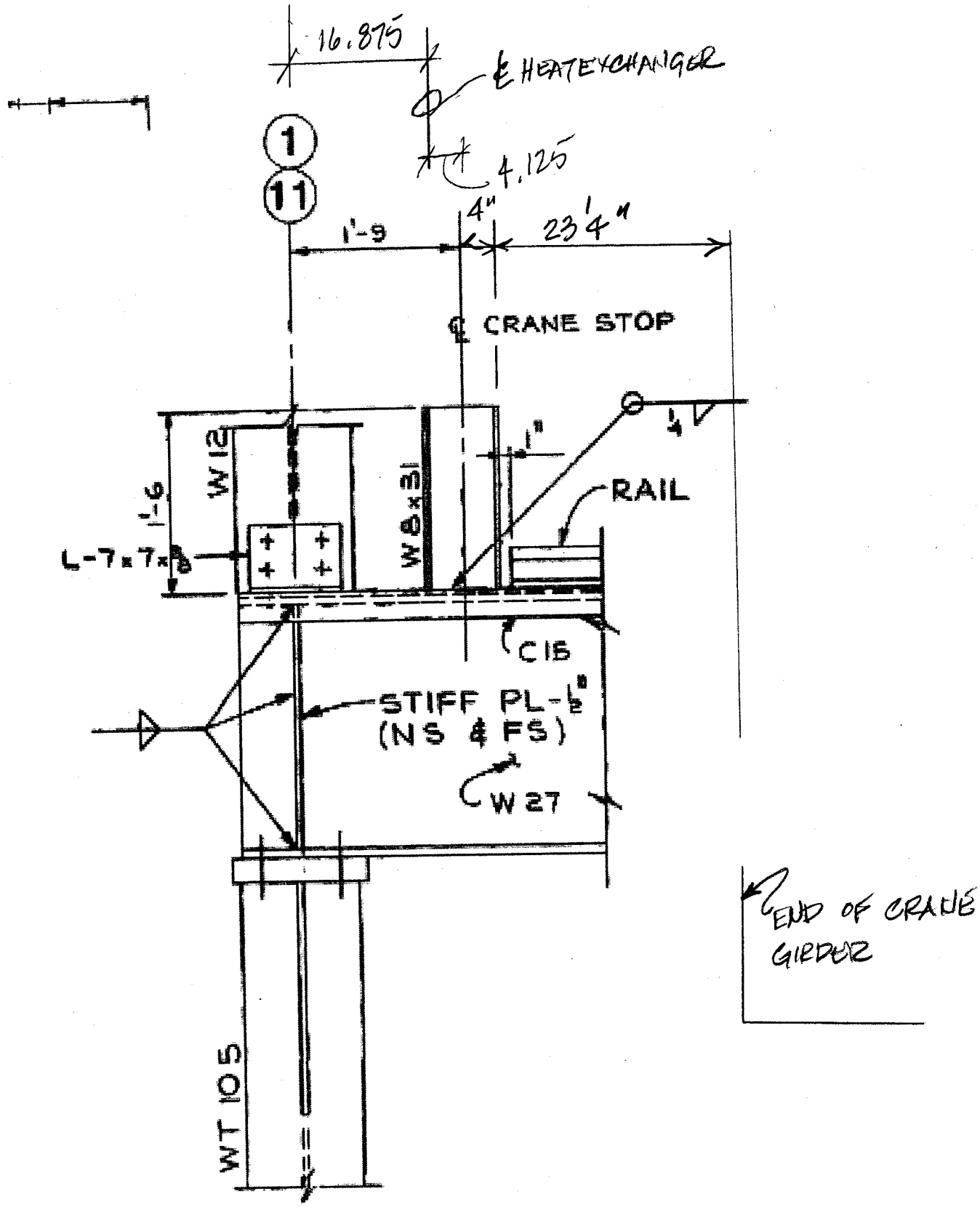

SECTION G
SCALE 1" = 1'-0
SS-2

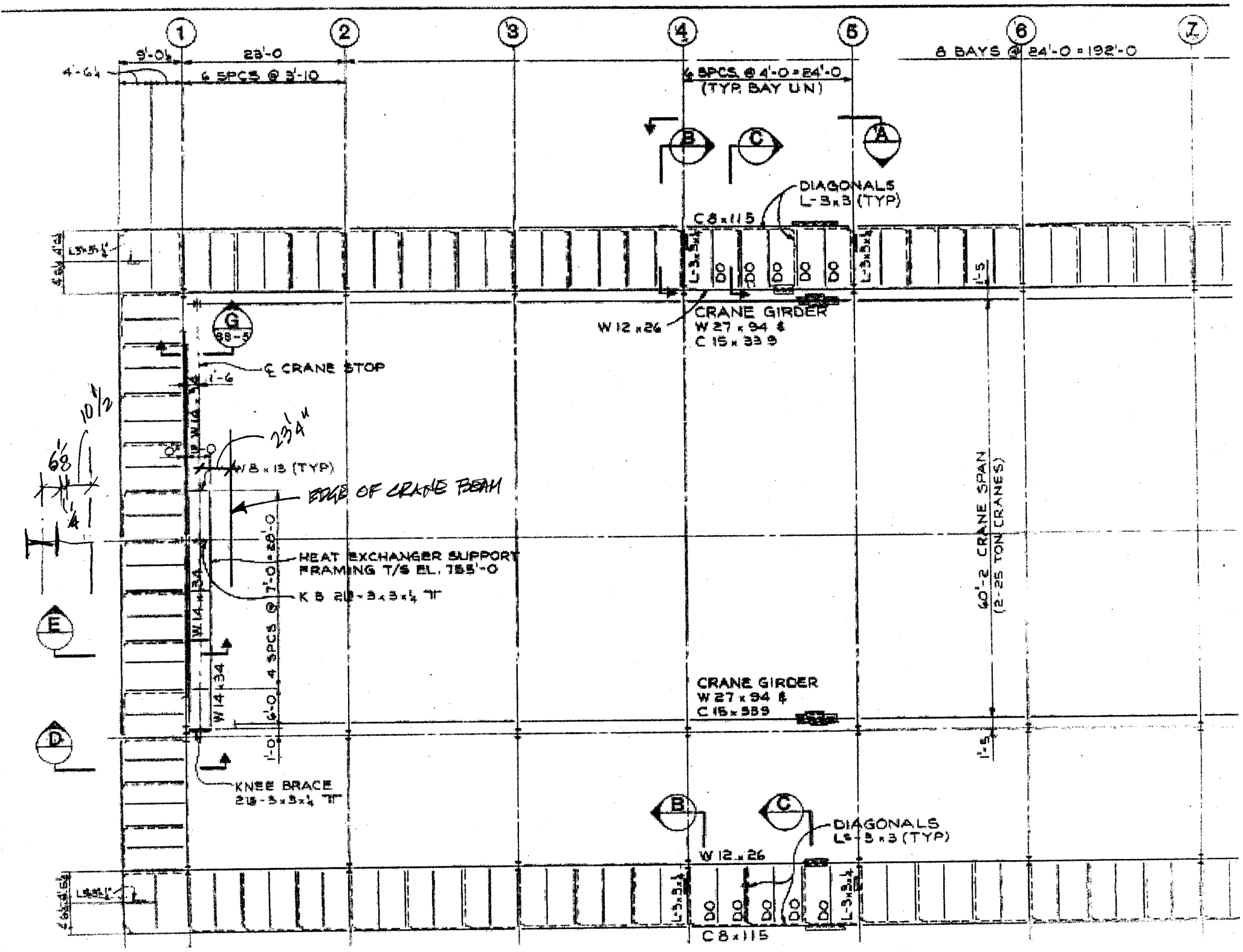

1
2
3
4
5
6
7
9'-0½
23'-0
4'-6¼
6 SPCS @ 3'-10
6 SPCS @ 4'-0 = 24'-0
(TYP. BAY UN)
8 BAYS @ 24'-0 = 192'-0
B
C
A
DIAGONALS
L-3x3 (TYP)
C8x115
L-3x3x¼
DO
1'-5
W 12 x 26
CRANE GIRDER
W 27 x 94 &
C 15 x 33.9
G
88-5
℄ CRANE STOP
1'-6
10½
6⅛
¼
23¼"
W 8 x 13 (TYP)
EDGE OF CRANE BEAM
HEAT EXCHANGER SUPPORT
FRAMING T/S EL. 755'-0
K 5 2L-3x3x¼ ⊤
W 14 x 34
4 SPCS @ 7'-0 = 28'-0
6'-0
1'-0
E
D
60'-2 CRANE SPAN
(2-25 TON CRANES)
CRANE GIRDER
W 27 x 94 &
C 15 x 33.9
KNEE BRACE
2L-3x3x¼ ⊤
DIAGONALS
L-3x3 (TYP)
W 12 x 26
C8x115

DRAWING OF HOIST WHICH WAS REMOVED

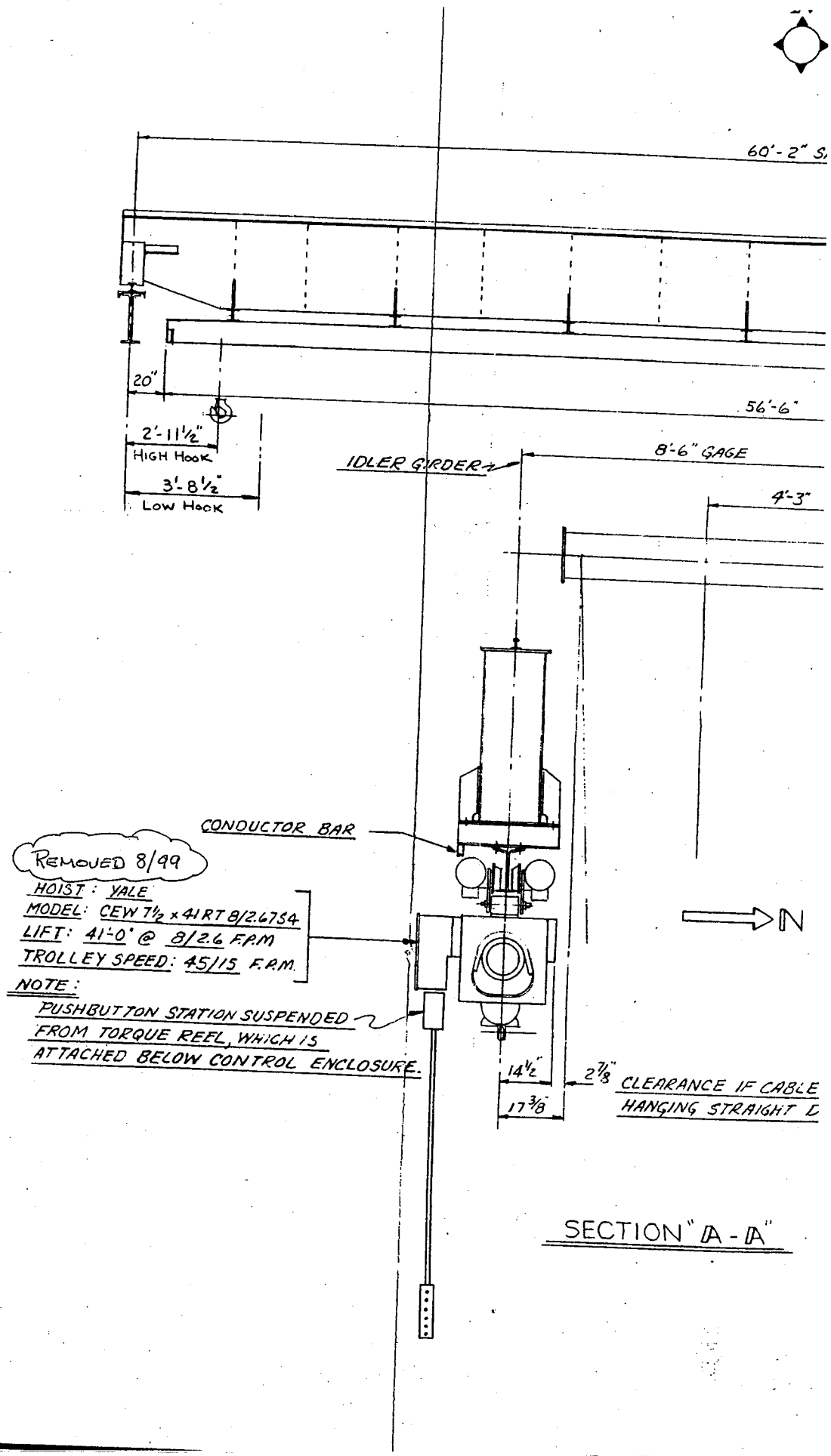

NOTE: ALL STEEL SHOWN IS EXISTING UNLESS NOTED AS "NEW."

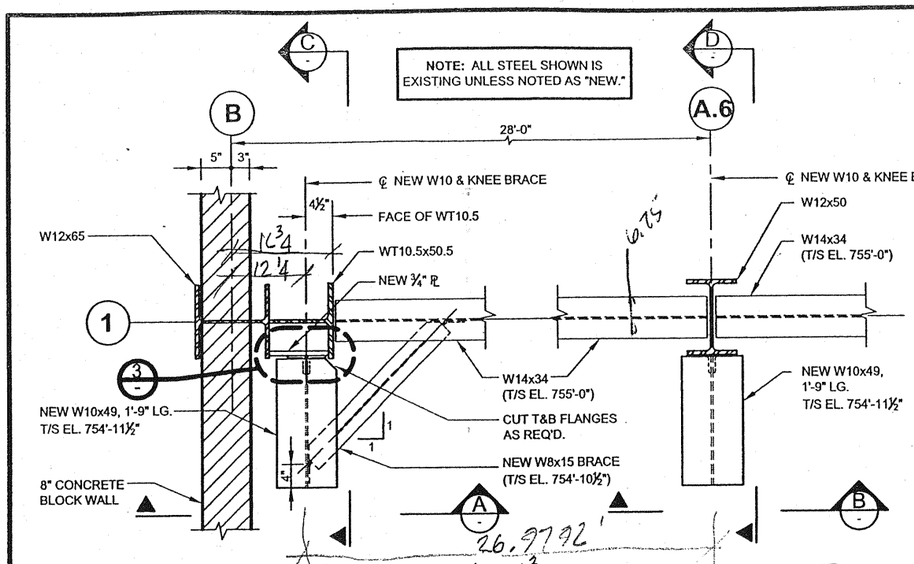

PLAN DETAIL 1

SCALE: 1" = 1'-0"

PLAN DETAIL 2

SCALE: 1" = 1'-0"

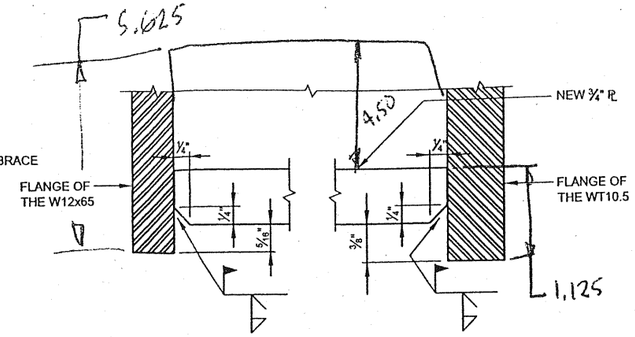

DETAIL 3

SCALE: FULL SIZE

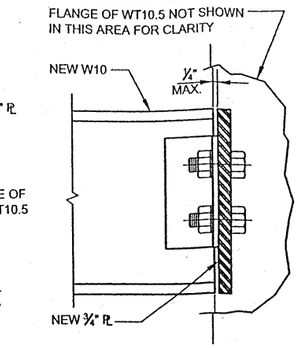

DETAIL 4

SCALE: 3" = 1'-0"

Robert - you may use the dimensions shown below for your input.
Paul

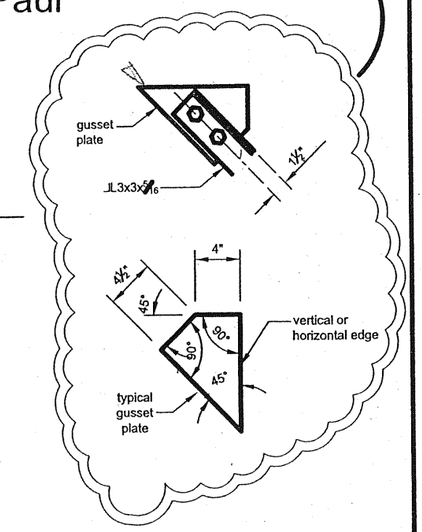

STRUCTURAL STEEL NOTES

1. SUBCONTRACTOR SHALL VERIFY EXISTING CONDITIONS AND ALL DIMENSIONS PRIOR TO STRUCTURAL STEEL FABRICATION.
2. ALL W SHAPES SHALL MEET THE REQUIREMENTS OF ASTM 572, GRADE 50.
   ALL PLATES, BARS AND ANGLES SHALL MEET THE REQUIREMENTS OF ASTM A36, GRADE 36.
3. ALL DETAILING, FABRICATION AND ERECTION OF STRUCTURAL STEEL SHALL CONFORM TO AISC MANUAL OF STEEL CONSTRUCTION, NINTH EDITION.
4. ALL WELDS SHALL BE PERFORMED BY THE ELECTRIC ARC METHOD USING E70XX ELECTRODES BY CERTIFIED WELDERS AND SHALL CONFORM TO AWS STRUCTURAL WELDING CODE D1.1 LATEST EDITION.
5. THE SURFACE OF STEEL TO BE WELDED SHALL BE CLEANED TO THE BARE METAL PRIOR TO WELDING.
6. AFTER COMPLETION OF WELDING A COAT OF PRIMER SHALL BE APPLIED TO EXPOSED BARE METAL.

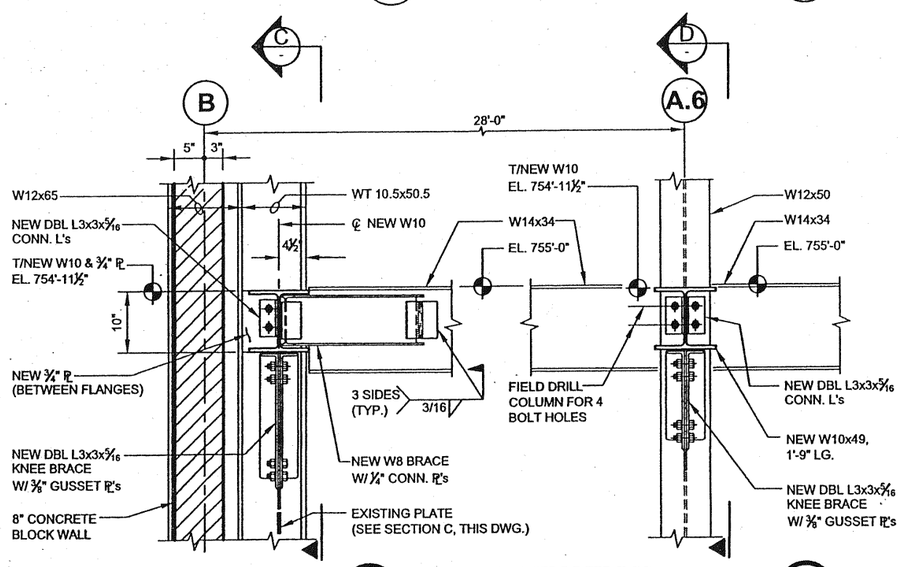

ELEVATION A

SCALE: 1" = 1'-0"

ELEVATION B

SCALE: 1" = 1'-0"

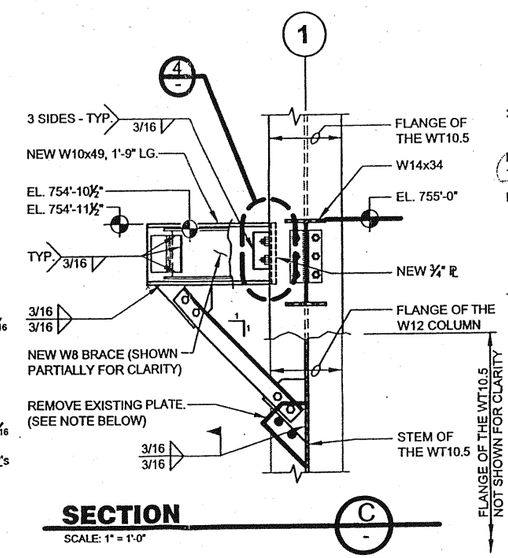

SECTION C

SCALE: 1" = 1'-0"

NOTE: AT HIS (HER) OPTION, THE CONTRACTOR MAY USE THIS EXISTING PLATE FOR THE KNEE BRACE CONNECTION TO THE COLUMN ON CONDITION THAT APPROPRIATE DIMENSIONAL ADJUSTMENTS ARE MADE TO AFFECTED MEMBERS. THE ANGLES MAY BE FIELD WELDED TO THE PLATE (3/16 FILLET, 3 SIDES EA. FACE) IN LIEU OF BOLTING.

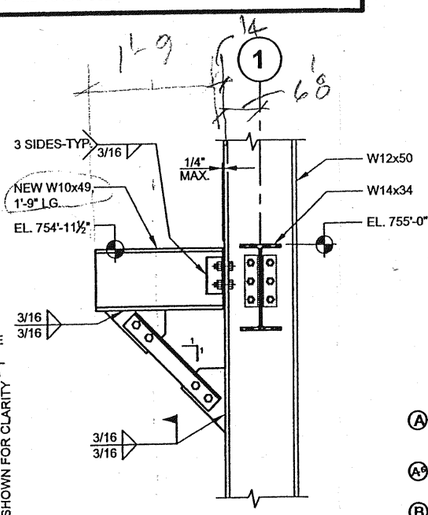

SECTION D

SCALE: 1" = 1'-0"

PRELIMINARY
NOT FOR CONSTRUCTION

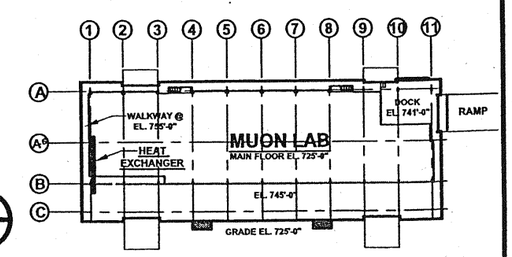

HEAT EXCHANGER LOCATION PLAN

EXCHANGER WT = 6000#

PROJECT NORTH

REV.	DATE	DESCRIPTIONS
		REVISIONS

SITE 39

Larisa Denisova

	NAME	DATE
DESIGNED	P. LAHN	
DRAWN	P. LAHN	
CHECKED		
APPROVED		
SUBMITTED		

PROJECT NORTH

SCALE:
1"=1'-0" SCALE 1 0 1 2 FEET
3"=1'-0" SCALE 0 1 FEET

FERMI NATIONAL ACCELERATOR LABORATORY

UNITED STATES DEPARTMENT OF ENERGY

NML HX SUPPORT

LOC. PLAN, SECTIONS, DETAILS & NOTES

DRAWING NO. 8-2-169 S-1 REV.

1-18-06

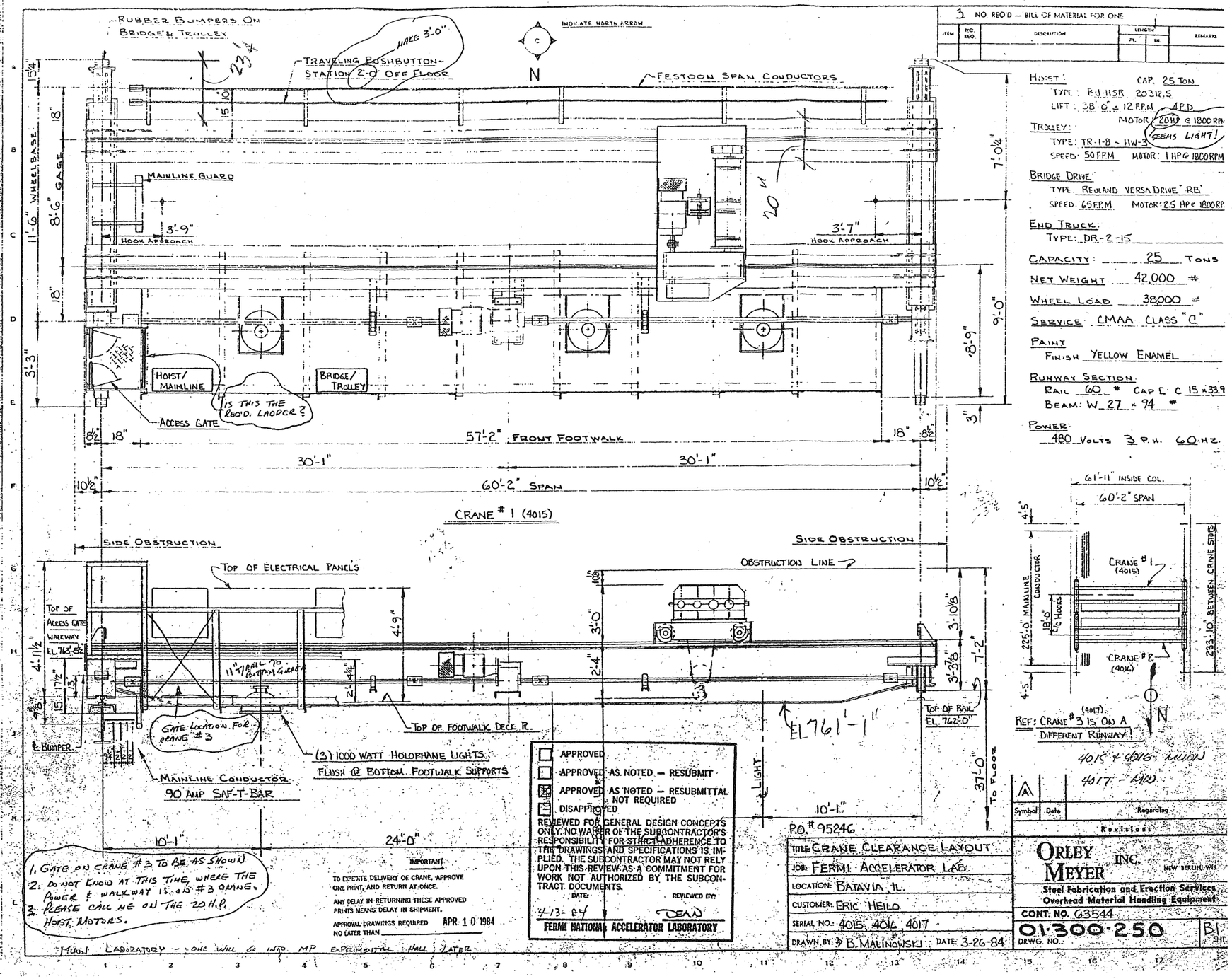

3 NO REQ'D — BILL OF MATERIAL FOR ONE

ITEM	NO. REQ.	DESCRIPTION	LENGTH FT.	LENGTH IN.	REMARKS

HOIST: CAP. 25 TON
TYPE: BU-HSR 20312.5
LIFT: 38'-0" @ 12 F.P.M. 4 P.D.
MOTOR: 20 HP @ 1800 RPM
SEEMS LIGHT!

TROLLEY:
TYPE: TR-1-8 - HW-3
SPEED: 50 F.P.M. MOTOR: 1 HP @ 1800 RPM

BRIDGE DRIVE:
TYPE: REULAND VERSA DRIVE "RB"
SPEED: 65 F.P.M. MOTOR: 2.5 HP @ 1800 RP

END TRUCK:
TYPE: DR-2-15

CAPACITY: 25 TONS
NET WEIGHT: 42,000 #
WHEEL LOAD: 38000 #
SERVICE: CMAA CLASS "C"

PAINT
FINISH: YELLOW ENAMEL

RUNWAY SECTION:
RAIL: 60 # CAP [C 15 × 33.9
BEAM: W 27 × 94 #

POWER:
480 VOLTS 3 P.H. 60 HZ.

REF: CRANE # 3 (4017) IS ON A DIFFERENT RUNWAY!

4015 & 4016 MUON
4017 - MW

Symbol	Date	Regarding
A		

Revisions

APPROVED
APPROVED AS NOTED — RESUBMIT
APPROVED AS NOTED — RESUBMITTAL NOT REQUIRED
DISAPPROVED

REVIEWED FOR GENERAL DESIGN CONCEPTS ONLY. NO WAIVER OF THE SUBCONTRACTOR'S RESPONSIBILITY FOR STRICT ADHERENCE TO THE DRAWINGS AND SPECIFICATIONS IS IMPLIED. THE SUBCONTRACTOR MAY NOT RELY UPON THIS REVIEW AS A COMMITMENT FOR WORK NOT AUTHORIZED BY THE SUBCONTRACT DOCUMENTS.

DATE: 4-13-84 REVIEWED BY: DEAN

FERMI NATIONAL ACCELERATOR LABORATORY

IMPORTANT
TO EXPEDITE DELIVERY OF CRANE, APPROVE ONE PRINT, AND RETURN AT ONCE.
ANY DELAY IN RETURNING THESE APPROVED PRINTS MEANS DELAY IN SHIPMENT.
APPROVAL DRAWINGS REQUIRED NO LATER THAN APR 10 1984

P.O. # 95246

TITLE: CRANE CLEARANCE LAYOUT
JOB: FERMI ACCELERATOR LAB.
LOCATION: BATAVIA, IL.
CUSTOMER: ERIC HEILO
SERIAL NO.: 4015, 4016, 4017
DRAWN BY: B. MALINOWSKI DATE: 3-26-84

ORLEY MEYER INC. NEW BERLIN, WIS.
Steel Fabrication and Erection Services
Overhead Material Handling Equipment
CONT. NO. 63544
DRWG. NO. 01·300·250 B1 SHT.

NL 751

NEW MUON LAB CRANE