Fermilab

Particle Physics Division
Mechanical Department Engineering Note

Number: MD-ENG-81 Date: 25 May 2005

Project Internal Reference:

Project: ME-7 Door Jamb Replacement Bracket

Title: Steel Door Header Bracket

Author(s): Dave Pushka

Reviewer(s):

Key Words: ME-7, Door Header Bracket

Abstract Summary: Replace the existing wooden door jamb posts with a steel bracket.

Applicable Codes: AISC 9th Edition, Uniform Building Code

REPLACE EXISTING 2x4 DOOR JAMBS WITH A BRACKET TO TRANSFER LOAD FROM 12" x 3½" GLUE-LAM TO CONCRETE.

DETERMINE LOAD –

LOAD IS LIMITED BY SHEAR IN GLUE-LAM

MAX SHEAR STRESS = 145 psi

AREA = 12" x 3½" = 42 in²

∴ V_{MAX} = 145 psi x 42 in² = 6090#

∴ DESIGN EACH BRACKET FOR 6100#

DETERMINE CONCRETE ANCHORS –

ASSUME f'_c = 4000 psi

½" HILTI KWIK BOLTS – ALLOWABLE SHEAR = 2450# / BOLT.

∴ 3 BOLTS ARE MINIMUM – USE 4 FOR SYMMETRY.

SIZE ∡'s – SEE AISC 9th pg 4-19 – 4-22

A 5½" LONG ANGLE HAS A CAPACITY OF AT LEAST 33.7 KIPS >> 6100# ∴ OK

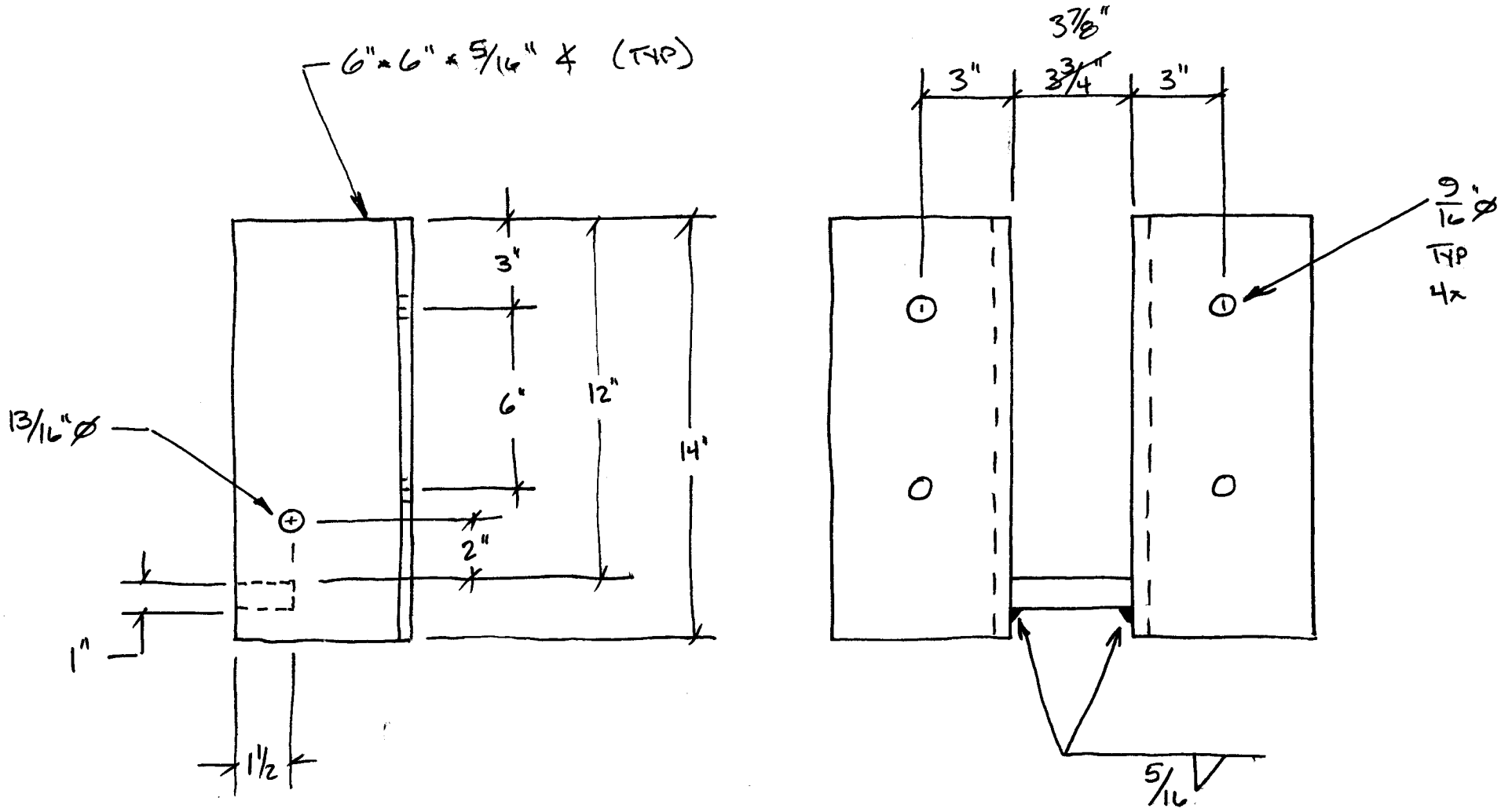

2 WELDMENTS REQ'D

B 5/25/05 D. PUSHKA

CHECK WELD ON BOTTOM BAR –

$$P = 6100\# = 0.707\, w l * 0.3 * 70{,}000 \text{ psi}$$

$$w_{MIN} = \frac{6100}{0.3 * 70{,}000 \text{ PSI} * 0.707 * 1\tfrac{1}{2}''} = 0.273''$$

$\therefore$ USE $5/16''$ WELD $(0.313'' > 0.273'')$

CHK BEAM COMPRESSION –

$$A = 1\tfrac{1}{2} * 3\tfrac{1}{2} = 5.25 \text{ in}^2$$
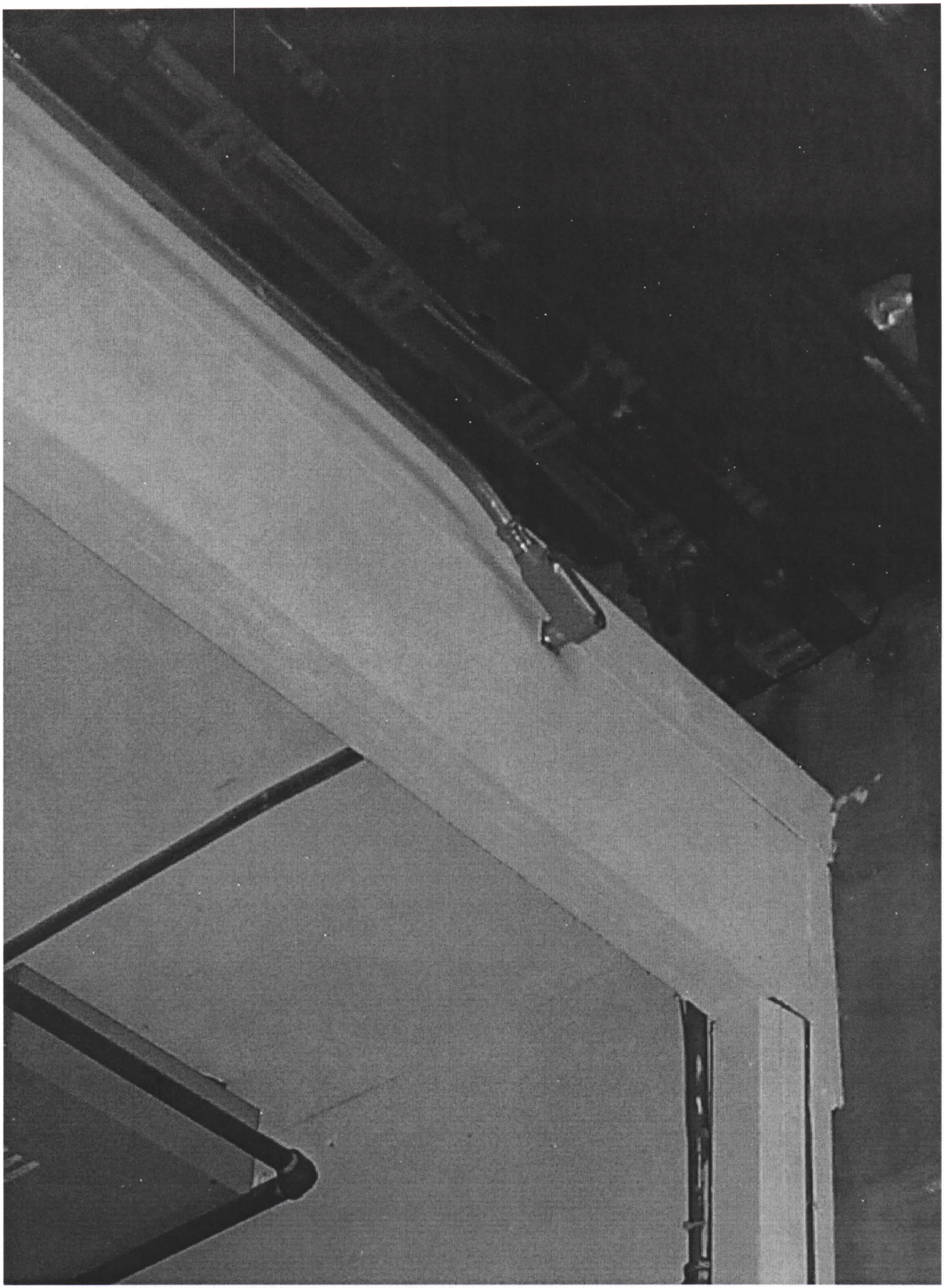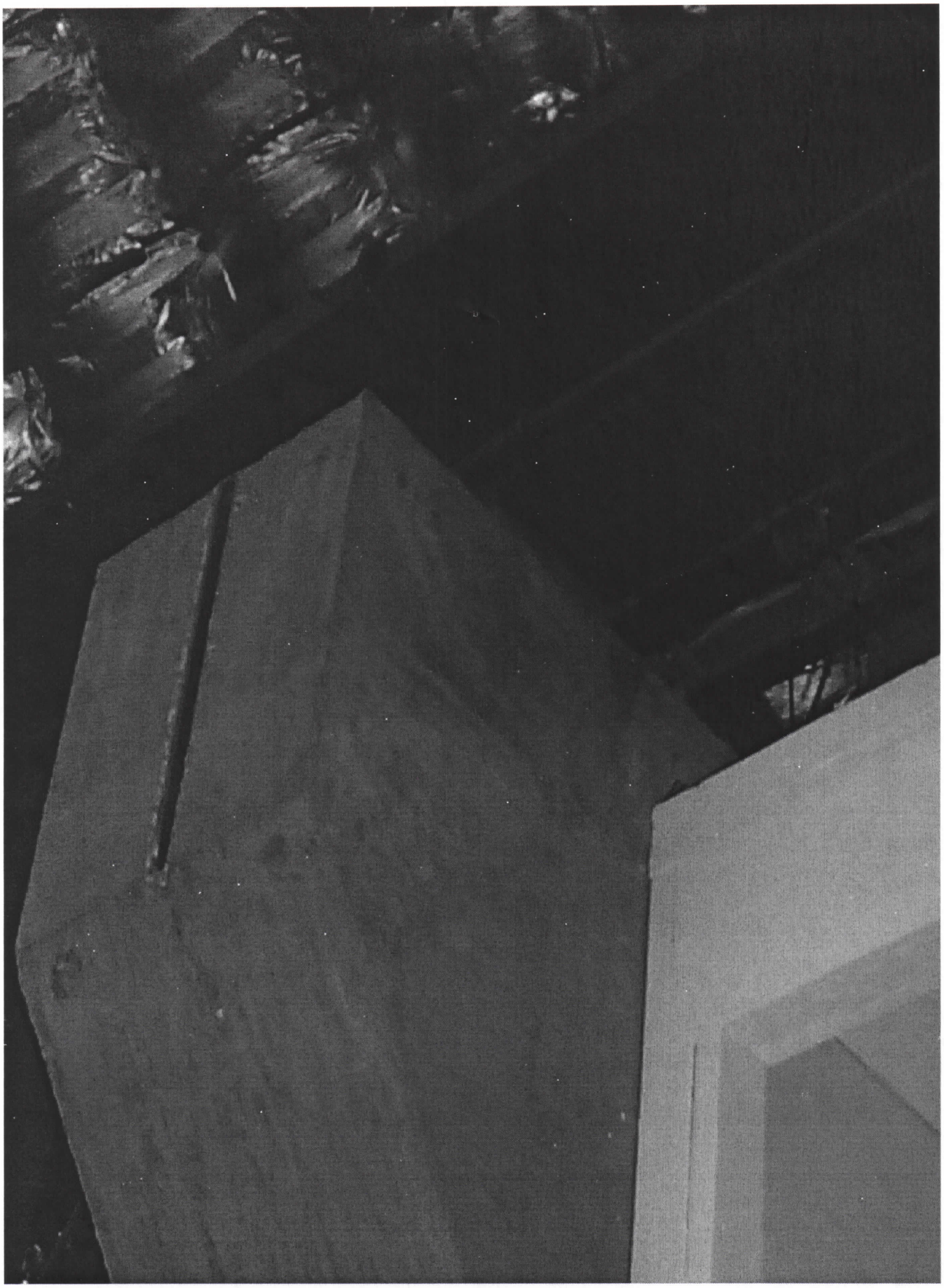
$$\sigma = \frac{P}{A} = \frac{6100}{5.25} = 1162 \text{ PSI} \quad \text{OK}$$