REV	DESCRIPTION	DRAWN	DATE
		APPROVED	DATE

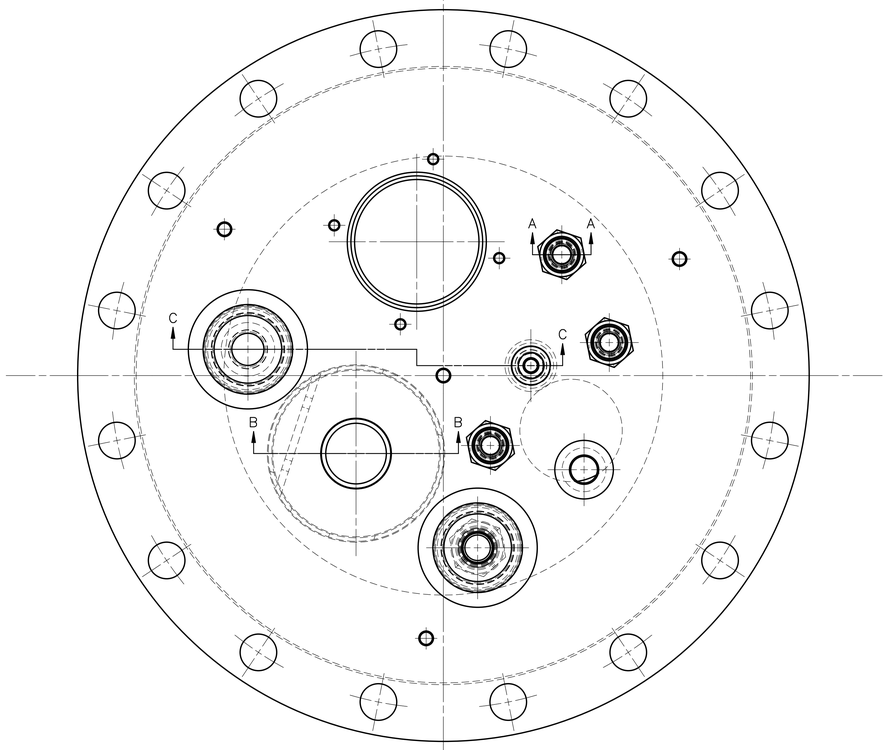

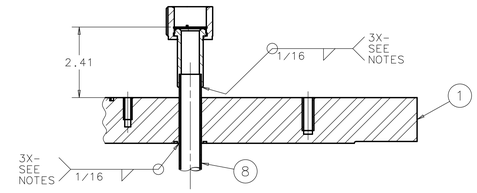

SECTION A-A

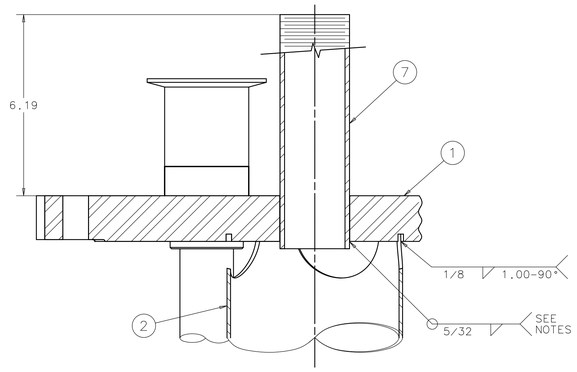

SECTION B-B

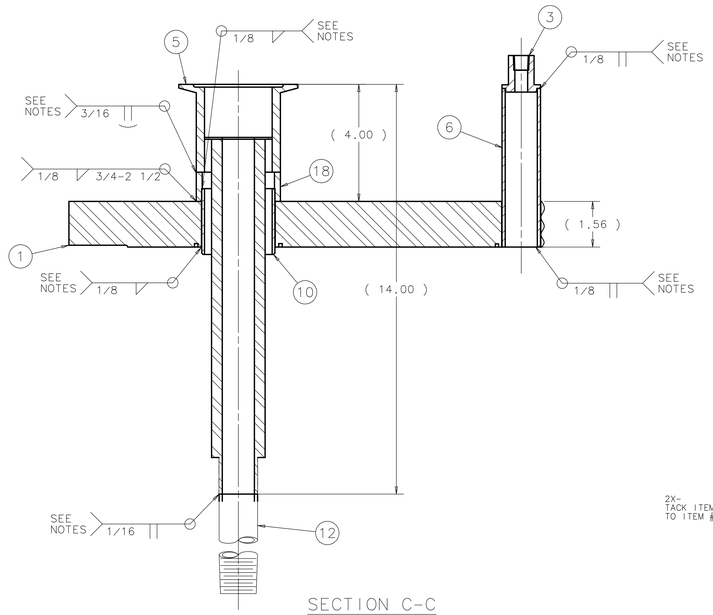

SECTION C-C

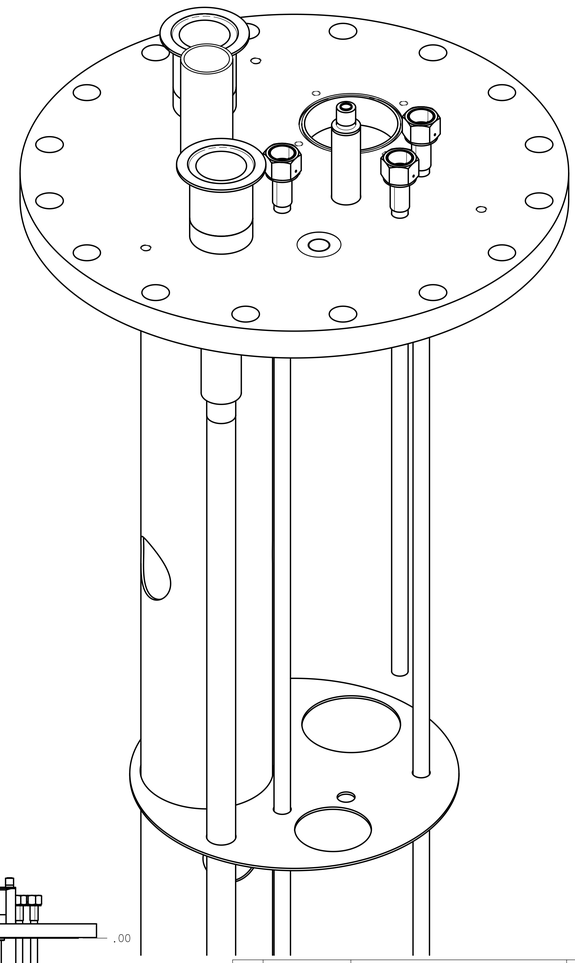

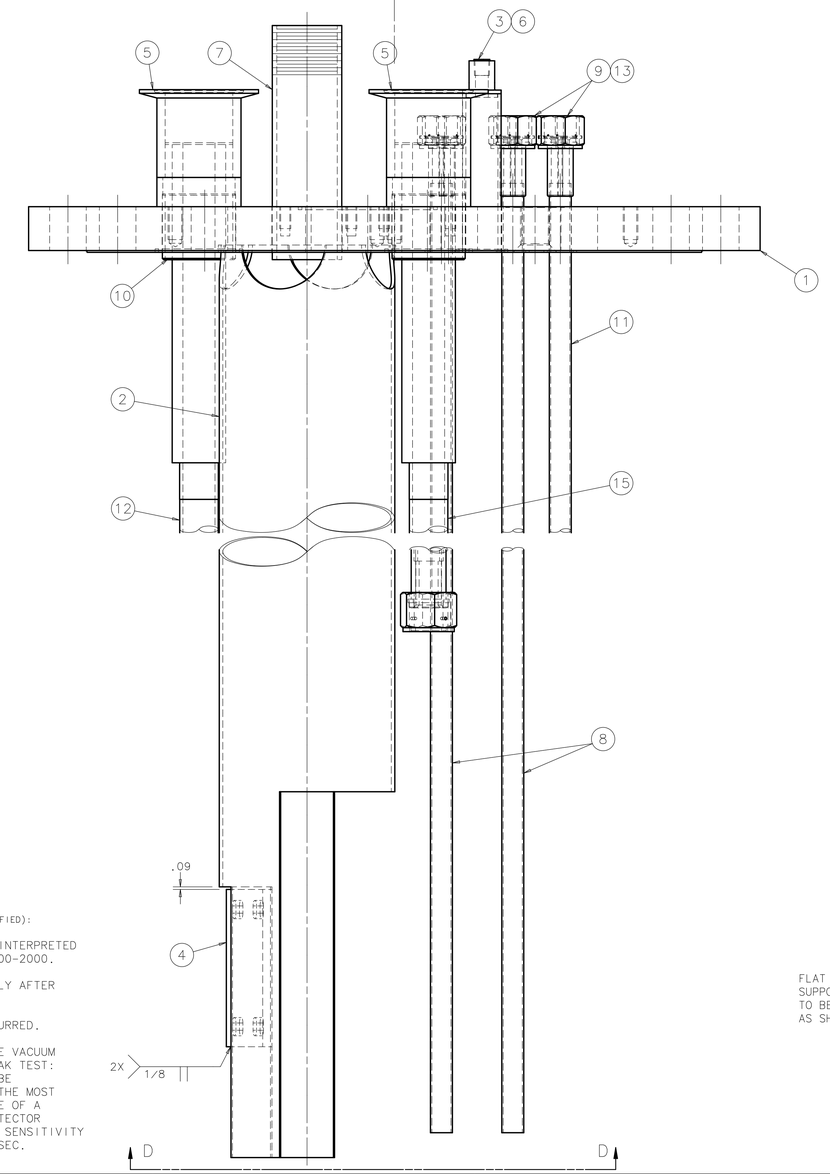

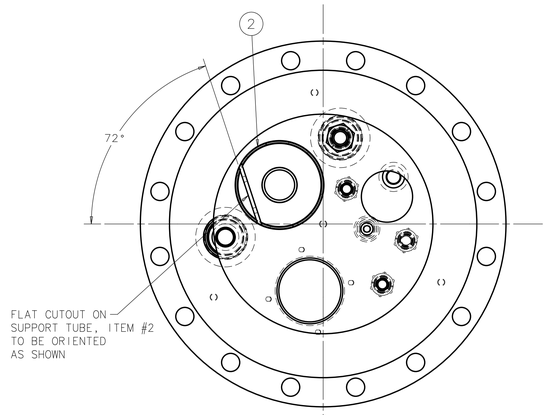

VIEW D-D

SCALE = 1:4

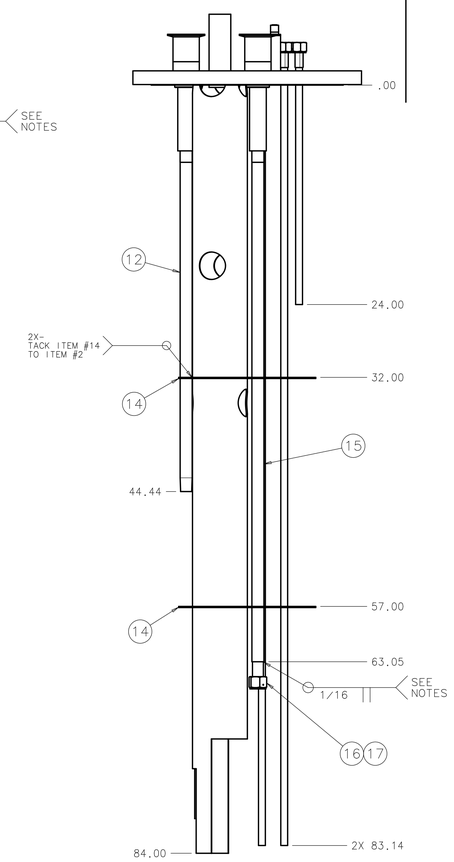

FRONT VIEW

SCALE: NONE

NOTES
(UNLESS OTHERWISE SPECIFIED):

1. DRAWING TO BE INTERPRETED PER ASME Y14.100-2000.
2. DIMENSIONS APPLY AFTER ALL FINISHING.
3. PART TO BE DEBURRED.
4. ALL WELDS TO BE VACUUM LEAK TIGHT. LEAK TEST: NO LEAK SHALL BE DETECTABLE ON THE MOST SENSITIVE SCALE OF A HELIUM LEAK DETECTOR WITH A MINIMUM SENSITIVITY OF 10^{-9} ATM.CC/SEC.

ITEM	PART NO.	DESCRIPTION OR SIZE	QTY.
18	MB-436542	BAYONET WELD BOSS COLLAR	2
17	SWAGELOK P/N SS-16-VCR-1	VCR FITTING, SWAGELOK FEMALE NUT, 1" VCR, 316SS	1
16	SWAGELOK P/N SS-16-VCR-3	VCR FITTING, SWAGELOK GLAND, 1" VCR, SOCKET WELD, 316L	1
15	COML.	PIPE, 1" NOM. SCH.10 x 54.62 LG., SST	1
14	MB-436431	SPACER	2
13	SWAGELOK P/N SS-12-VCR-1	VCR FITTING, SWAGELOK FEMALE NUT, 3/4" VCR, 316SS	3
12	COML.	PIPE, 1" NOM., SCH.10, SST x 36.00 LG., MPT @ ONE END	1
11	COML.	TUBING, ø3/4", #18 Ga. (.049) x 24.00 LG., SST	1
10	COML.	TUBE, ø2.50 OD x .120 WALL x 2.25 LG., 304 SST	2
9	SWAGELOK P/N SS-12-VCR-3	VCR FITTING, SWAGELOK GLAND, 3/4" VCR, SOCKET WELD, 316L	3
8	COML.	TUBING, ø3/4", #18 Ga. (.049) x 85.50 LG., SST	2
7	COML.	PIPE, 2" NOM., SCH.40 x 8.00 LG., SST, MPT @ ONE END ON OUTSIDE	1
6	COML.	LVT VACUUM SHELL PIPE, ø1.00 x SCH.10 x 5.42 LG., 304 SST	1
5	PBF-10	PB FEMALE COUPLING, 1 x 2 1/2 BAYONET, 304 SST, PHPK TECH.	2
4	MB-436538	TRANSFER PUMP MOUNTING PLATE	1
3	MB-436434	TOP FLANGE STANDOFF	1
2	MC-436467	SUPPORT TUBE, ø6.00	1
1	MD-436428	TOP FLANGE	1

PARTS LIST

UNLESS OTHERWISE SPECIFIED			ORIGINATOR	H.CEASE	31-JUL-2007
.XX	.XXX	ANGLES	DRAWN	P.POLL	30-JAN-2008
± .02	± ---	± 1°	CHECKED	J.RAUCH	26-FEB-2008
			APPROVED	H.CEASE	26-FEB-2008

1. BREAK ALL SHARP EDGES .015 MAX.
2. DO NOT SCALE DRAWING.
3. DIMENSIONS BASED UPON ASME Y14.5M-1994
4. MAX. ALL MACH. SURFACES 125√
5. DRAWING UNITS: U.S. INCH

USED ON: ME-436426

MATERIAL: SEE PARTS LIST ABOVE

FERMI NATIONAL ACCELERATOR LABORATORY
UNITED STATES DEPARTMENT OF ENERGY

DECAM/CCDS TEST VESSEL ASSEMBLY TEST VESSEL WELDMENT

SCALE	DRAWING NUMBER	SHEET	REV
1:1	4900.120-ME-436466	1 OF 1	

CREATED WITH : Ideas12NXSeries | GROUP: PPD/MECHANICAL DEPARTMENT

NOTICE: IMAGE OBTAINED FROM FERMILAB WEB SITE

This information is provided for REFERENCE use only. Not for MANUFACTURE, or DESIGN INFORMATION. All information contained in this document represents work sponsored by an agency of the U.S. Government. Neither the U.S. Government nor any agency thereof, nor Universities Research Association, Inc., nor any of their employees or officers, makes any warranty, express or implied, or assumes any legal liability or responsibility for the accuracy, completeness, or usefulness of any information, apparatus, product or process disclosed, or represents that its use would not infringe privately owned rights.