REV	DESCRIPTION	DRAWN / APPROVED	DATE / DATE
A	REV. DIM.: ø4.25, WAS ø4.00; 6.00, WAS 5.78; 6.38, WAS 6.17; MOVED ø1.335: 3.00, WAS 2.88;	PAT POLL	02/06/08
		HERMAN CEASE	02/06/08
B	ADDED 1/2-13 HOLE AT CENTER, TOTAL=4; ADDED 3/4 NPT.	PAT POLL/B.ELLISON	2/25/08
		HERMAN CEASE	04/07/08

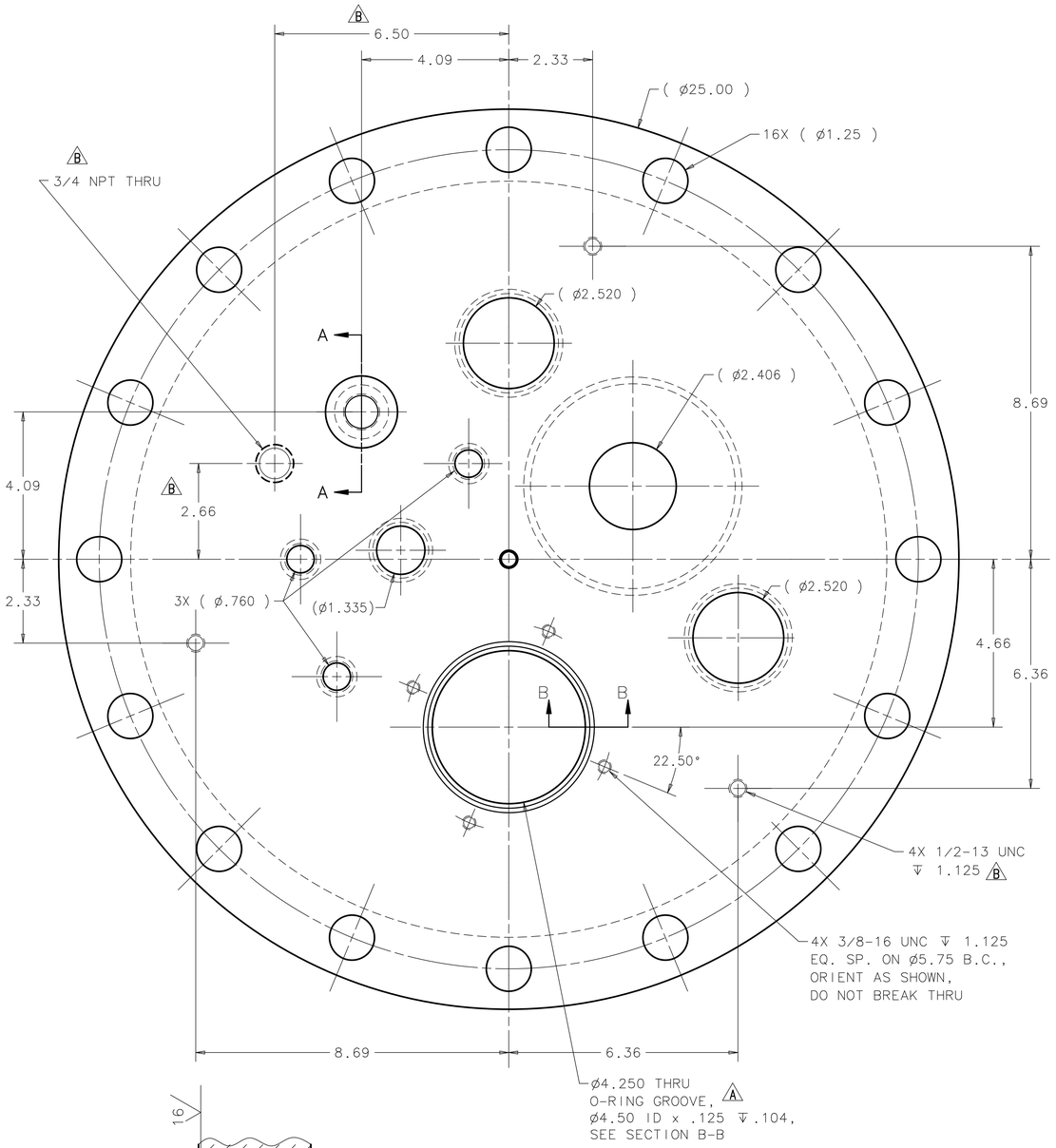

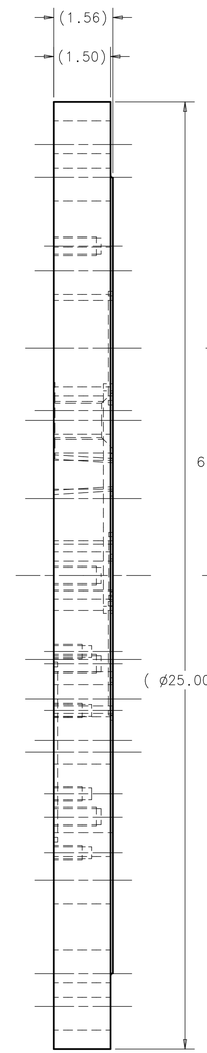

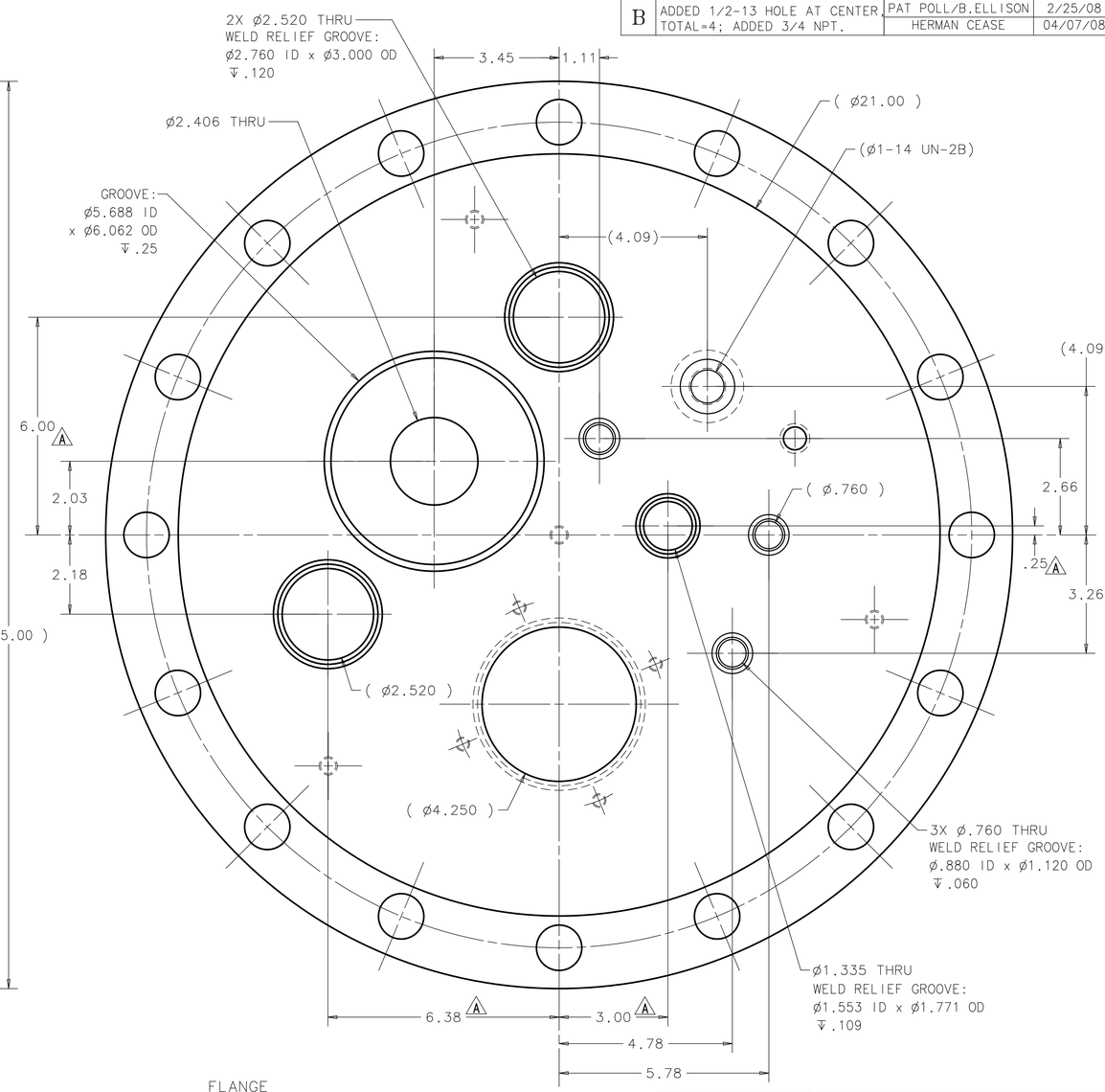

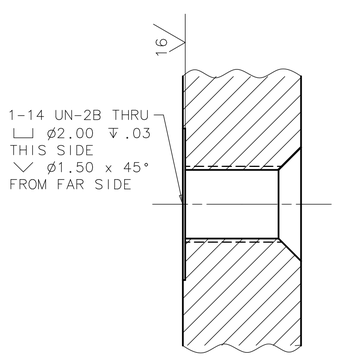

SECTION A-A

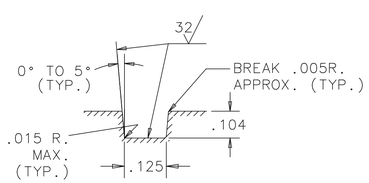

SECTION B-B

"O" RING GROOVE
(NOT TO SCALE)

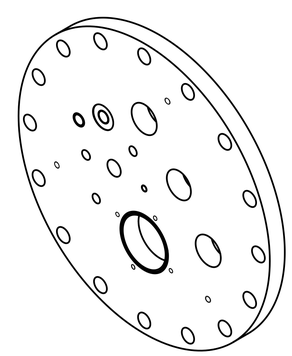

FLANGE
18" BLIND FLANGE, 150 LB.
25" OD x 1.56 THK.,
16 MTG. HOLES @ ø1.25
T304/304L
McJUNKIN CORP. P/N 7310-0365

WT.: 195 LBS. (AS SHOWN)

NOTICE: IMAGE OBTAINED FROM FERMILAB WEB SITE

This information is provided for REFERENCE use only. Not for MANUFACTURE, or DESIGN INFORMATION. All information contained in this document represents work sponsored by an agency of the U.S. Government. Neither the U.S. Government nor any agency thereof, nor Universities Research Association, Inc., nor any of their employees or officers, makes any warranty, express or implied, or assumes any legal liability or responsibility for the accuracy, completeness, or usefulness of any information, apparatus, product or process disclosed, or represents that its use would not infringe privately owned rights.

UNLESS OTHERWISE SPECIFIED			ORIGINATOR	H.CEASE	31-JUL-2007
.XX	.XXX	ANGLES	DRAWN	P.POLL	05-SEP-2007
± .02	± .005	± .25°	CHECKED	J.RAUCH	24-JAN-2008
			APPROVED	H.CEASE	24-JAN-2008

1. BREAK ALL SHARP EDGES .015 MAX.
2. DO NOT SCALE DRAWING.
3. DIMENSIONS BASED UPON ASME Y14.5M-1994
4. MAX. ALL MACH. SURFACES 125
5. DRAWING UNITS: U.S. INCH

USED ON: ME-436466

MATERIAL: SEE NOTE

FERMI NATIONAL ACCELERATOR LABORATORY
UNITED STATES DEPARTMENT OF ENERGY

DECAM/CCDS TEST VESSEL ASSEMBLY TOP FLANGE

SCALE	DRAWING NUMBER	SHEET	REV
1:4	4900.120-MD-436428	1 OF 1	B

CREATED WITH : Ideas12NXSeries | GROUP: PPD/MECHANICAL DEPARTMENT