Fermilab

Particle Physics Division 12-01-01

Mechanical Department Engineering Note

Number: MD-Eng-224 Date: January 19, 2010

Project: DES TELESCOPE SIMULATOR

Project Internal Reference:

Title: NW Platform Stability

Author(s): Robert J. Woods

Reviewer(s): Dave Poshka 1-26-2010

Key Words: DECAM, DES, TELESCOPE SIMULATOR, NW PLATFORM

Abstract/Summary:

Unlike the actual NW Platform that is supported by a motorized lifting system at CTIO, the NW Platform installed in Lab A will be supported by concrete shield blocks. Since the front of the platform will be subjected to overhanging loads the rear supports will be in tension. This means the rear of the platform will have to be anchored to the shield blocks and the blocks themselves will have to be heavy enough to resist this upward force. The purpose of this calculation is to compute the magnitude of this resisting force.

Applicable Codes:

Manual of Steel Construction, ASD, Ninth Edition, American Institute of Steel Construction, Inc. 1989

DES TELESCOPE SIMULATOR

NW PLATFORM STABILITY

R. J. WOODS
JAN. 29, 2010

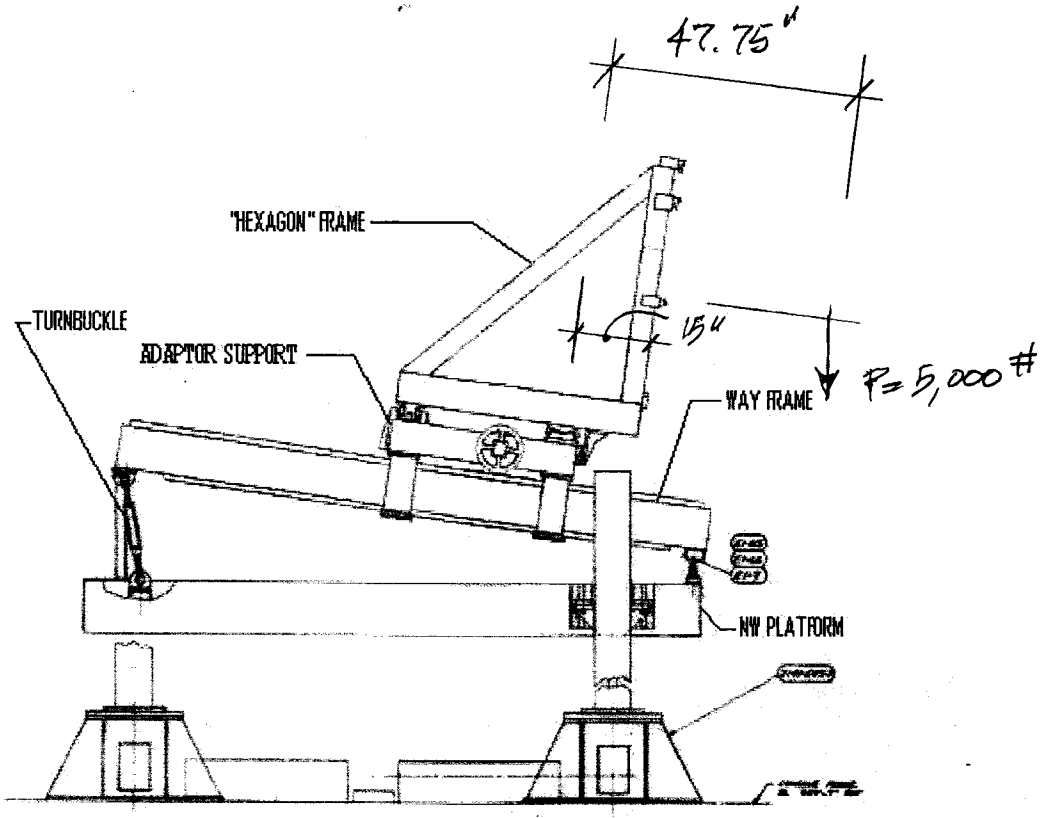

SEE ENGINEERING NOTE MD-ENG-220 FOR HEXAGON FRAME LOAD CALCULATIONS:

$R_L = -7960.8\#$ (UPLIFT INCLUDING FRAME)

$R_R = 13{,}894.8\#$ (DOWNWARD INCLUDING FRAME)

ADAPTOR SUPPORT WEIGHT:

2 - 4 x 4 x 1/4 TUBES x 52" LONG $= 2(12.21)(52/12) = 106\#$

2 - 4 x 4 x 1/4 TUBES x 27.5" LONG $= 2(12.21)(27.5/12) = 56\#$

4 - PL 1/4 x 5 3/4 x 5 1/4 $= 4\left(\frac{.25 \times 5.75 \times 5.25}{144}\right)(490) = 103\#$

4 - PL 1/2 x 6 x 9 $= 4\left(\frac{.5 \times 6 \times 9}{144}\right)(490) = 368\#$

1 PL 1/2 x 6 x 12 $= \left(\frac{.5 \times 6 \times 12}{144}\right)(490) = 123\#$

SUB TOTAL $756\#$

ADAPTOR SUPPORT WEIGHT (CON'T)

MISC. BRACKETS

SUB TOTAL 756#
250#
TOTAL 1006#

WAY FRAME WEIGHT:

2 - 8x4x1/4 x 116 TUBES = 2(19.02)(116/12) = 368#
1 - 8x4x1/4 x 42 TUBE = 1(19.02)(42/12) = 67#
1 - 4x4x1/4 x 42 TUBE = 1(12.21)(42/12) = 43#
4 - 2.125x1.25x110 WAYS = $4\left(\frac{2.125\times1.25\times110}{1728}\right)(490) = 331\#$

MISC. BRACKETS

SUB TOTAL 809#
241#

TOTAL 1050#

WAY FRAME:

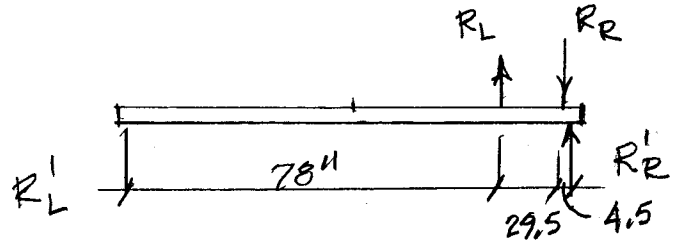

$R_L = -7960.8 + 503$
$= -7457.8\#$

$R_R = 13894.8 + 503$
$= 14397.8\#$

$R'_L = (34(-7457.8) + 4.5(14397.8))/112$
$= -1686\#$

$R'_R = (78(-7457.8) + 107.5(14397.8))/112$
$= +8626\#$

WITH WAY FRAME WEIGHT:

$R'_L = -1686 + 525 = -1161\#$

$R'_R = +8626 + 525 = +9151\#$

NW PLATFORM
(APPLIED LOADS)

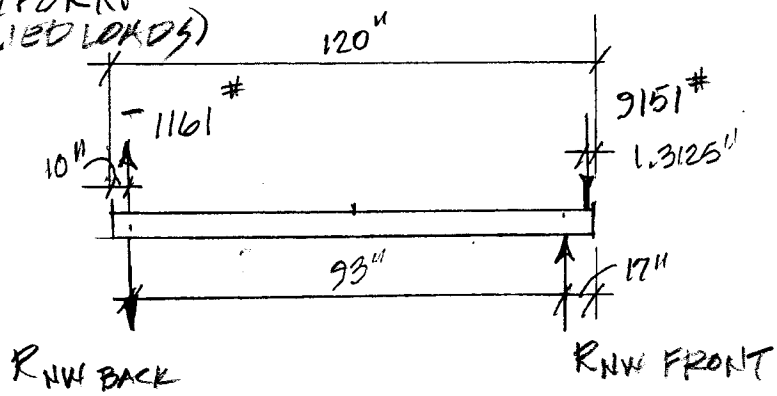

$$R_{NW\ FRONT} = ((17 - 1.3125) + 93)(9151)/93$$
$$= 10{,}695^{\#}$$

$$R_{NW\ BACK} = ((17 - 1.3125)(9151) + 93(1161))/93$$
$$= -2704^{\#} \text{ (UPWARD)}$$

NW PLATFORM
(DEAD & LIVE LOADS)

DEAD LOADS:

PLATFORM WT = 1200#
DIVING BOARDS = 300# EA

LIVE LOADS:

LARGER OF $2(250^{\#}) = 500^{\#}$ (2 PEOPLE)
OR $50\left(\frac{32 \times 75}{144}\right) = 833^{\#}$ ($50^{\#}/FT^2$) ← USE

$$P_{DB} = 2(833 + 300) = 2266^{\#}$$

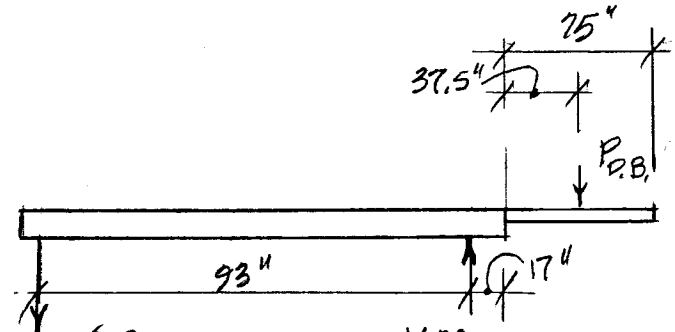

+600	+600
−1327.9	+3593.9
−727.9#	4193.9#

TOTAL UPLIFT @ REAR SUPPORTS = 2704 + 727.9
= 3431.9#

EACH SUPPORT = 3431.9/2
= 1716#

FOR A SAFETY FACTOR OF 3, END BLOCKS MUST HOLD DOWN 3(1716) = 5148#

IF A TURNBUCKLE IS USED
McMASTER # 2999T62 (3/4-10 SCREWS, 9")
CAPACITY = 5200# > 5148# OK