Fermilab

Particle Physics Division
Mechanical Department Engineering Note

Number: MD-ENG- 223 Date: January 12, 2010

Project Internal Reference:

Project: DECam

Title: Structural Analysis & Calculations for the DECam Simulator Rotator Outer Race Frame Under Three (3) Lifting Points.

Author(s): Edward Chi

Reviewer(s):

Key Words: Simulator, Rotator, Outer Race frame, Dead load, Live Load, Allowable Stress, Computed Stress, FEA, Reaction, Deflection, Lifting.

Abstract Summary:

The mechanical behavior of the DECam Simulator Outer Race frame under three lifting points with 35,000 total load were extensively discussed, analyzed and studied through the manual mathematical computation and FEA method respectively. The results from both approaches are consistent each other and well meet the subject applicable codes.

Applicable Codes:

"Allowable Stress Design", AISC, 9th edition
"Aluminum Design manual", 6th edition, By the Aluminum Association.
"Fastener Standards" 6th edition, by Industrial Fasteners Institute", 1988
"Steel Structures" by C. Salmon & J. Johnson. 3rd edition
"Below the Hook Lifting Devices" ASME B30.20

Structural Analysis and Calculations for DECam Simulator Rotator Outer Race Frame Lifting Under Three Lifting Points

Background Brief Introduction:

The DECam Telescope simulator is composed mainly by Rotator (composed by Inner Race and Outer Race) and the Telescope. The Simulator Rotator and the Inner and Upper rings of the Telescope will lift together through three (3) Outer Race lifting lugs as showing in Figure 1. The detail information, configuration and others of the DECam Simulator can find from the link: http://des-docdb.fnal.gov:8080/cgi-bin/RetrieveFile?docid=1528&version=3&filename=rotator-simulator-des-022708.ppt

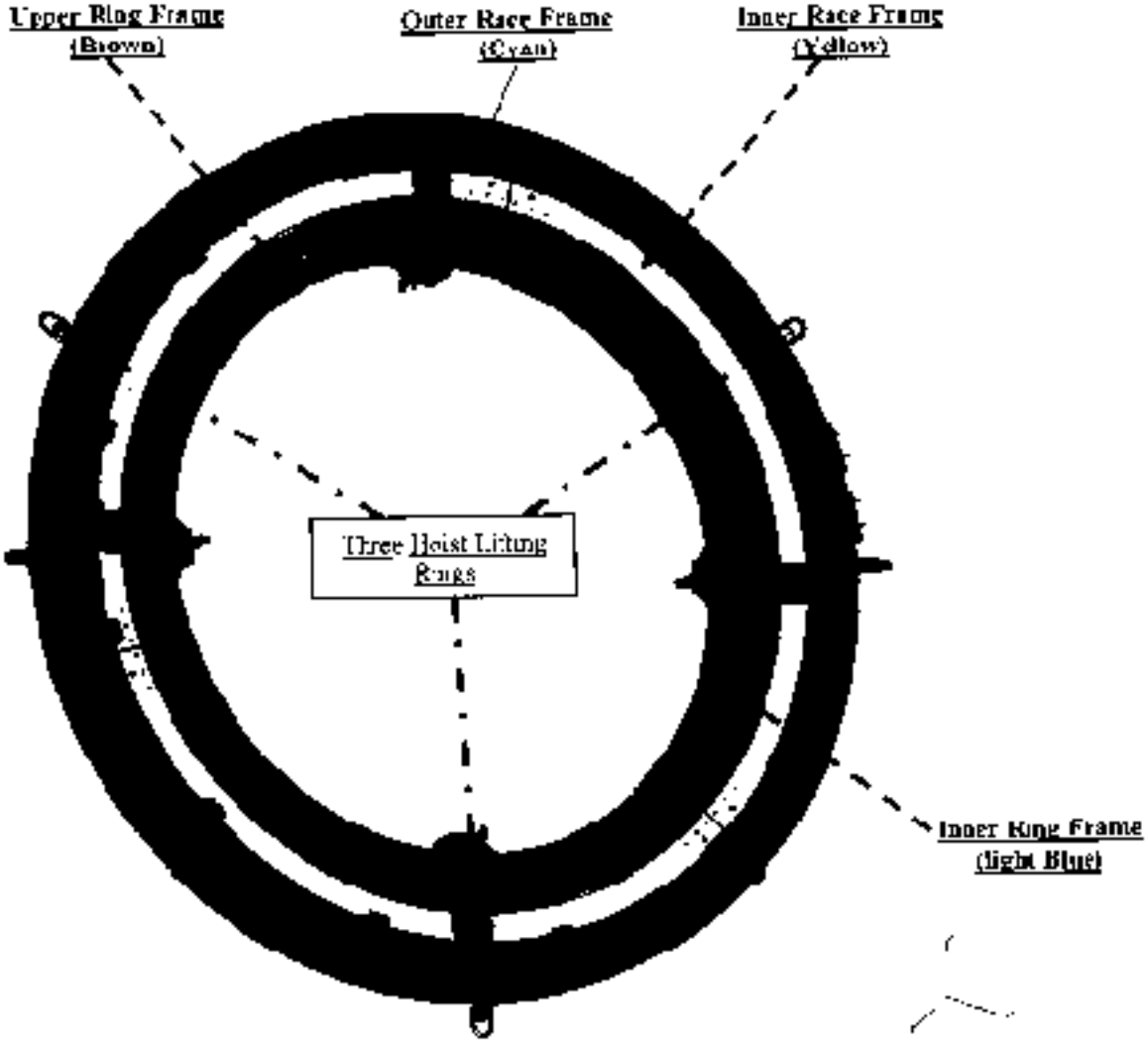

Figure 1, Isometric view of the telescope simulator Rotator, Inner Ring and Upper Ring

Design Criteria, Introductions and Assumptions:

W_{rings} = 15,000 lbs (total mass weight of the Inner ring and Upper ring)
W_{others} = 20,000 lbs (mass weight of the Inner race, Outer race and the others)
See dwg: ME-436983, MD-480079.
W_{tl} = 35,000 lbs (total weight of the Inner ring, Upper ring and the Rotator).
where:
W_{dl} = 10,000 lbs (mass weight of the outer race), dead load.
W_{ll} = 25,000 lbs (combined wt. of the inner ring, upper ring and the inner race), live load
Nominal dim. of the inner race: 215" (d_i) x 239" (d_o) x 12.0"
Nominal dim. of the outer race: 241" (d_i) x 265" (d_o) x 12.0"

Under the case of three (3) lifting points

Simulating the Loading Case, Define the Boundary Condition and Find Out the Geometrical and Material Properties:

When four rings are lifted together by 3 points through the hoist rings and lifting lugs horizontally as shown from figure 1 on page 2, we can assume that the Outer Race frame acting as a continuous beam of three (3) equal spans with uniformly distributed load, the distributed load is total load (the dead load of the outer race frame) plus the live load of the inner race frame, inner ring and upper ring) divided by the circumferential length of the outer race frame

Such force distribution is illustrated in Figure 2 of page 3, where two of the three lifting lugs represented by location B and C, the third lifting lug represented by location A and D together to become a closed circle beam.

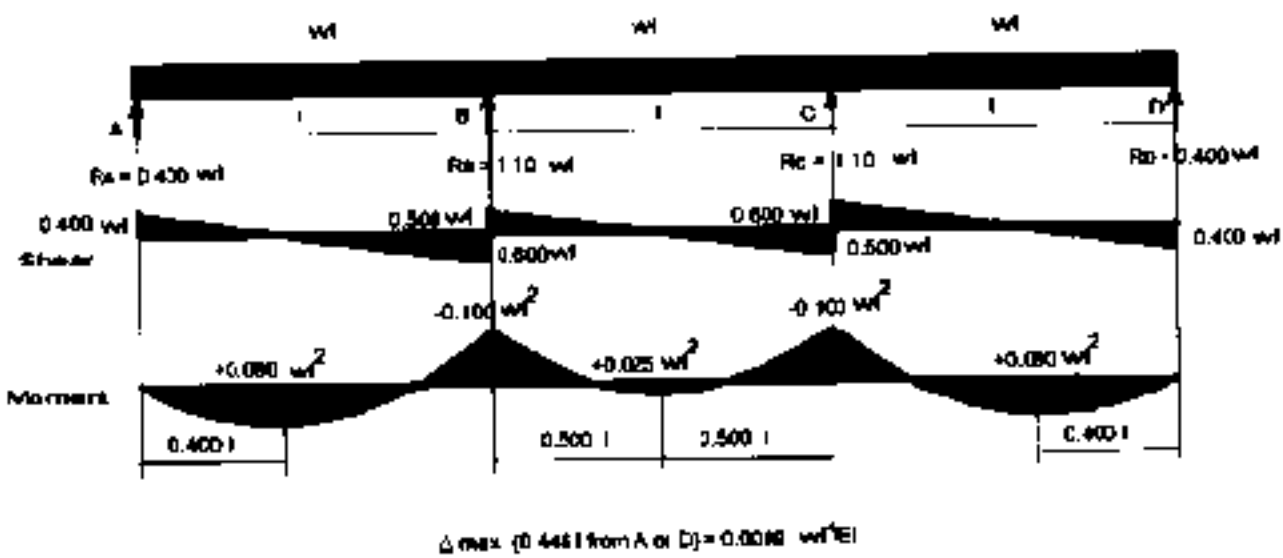

Figure 2, Continuous beam of three equal spans with uniformly distributed load.
(See case 42 VII-127, "Aluminum Design Manual", 6th edition)

where:

r_c = ((265" + 241")/2) ÷ 2 = 126.50"

The mean radius of the outer race flange in radial direction.

L_{120} = (120/360) x 2 π r_c = 264.94"

The circumferential length of frame respect to 120 degree segment & mean radius.

$w = W_1 \div 3\, L_{120}$ = 44.04 lbs/in

It is found that the max. moment and the max. Shear force is at the lifting lug location (location B or C):

$M_{max} = 0.100\, w\, L_{120}^2 = 0.100 \times 44.04$ lbs/in x 264.94^2 in^2

309,131 lbs –in

$V_{max1} = 0.600\, w\, L_{120} = 0.600 \times 44.04$ lbs/in x 264.94 in

= 7,001 lbs.

However, we conservatively assume that:

$V_{max} = W_{T1} \div 3$ = 35,000 lbs ÷ 3 = 11,667 lbs.

Since the max. moment and the max. shear force both locate in the lifting lug location, let's get the geometrical property of the lifting lug area.

(1) (2)

Figure 3. Lifting lug area structural configuration with cross section view in major radial plane.

The configuration details can be found from the drawings of ME-436947, ME-436947 and ME-436905 besides the views from figure 3.

The view and detail dimension from Figure 4 (1) of page 5 is the cross section view which is perpendicular to the major radial plan through the center of the lifting lug. For the sake of simple and conservative approach, this calculation has not included the values of the center gusset and the reinforcing pads around the lifting lug.

$I_{x1} = [b\,(d^3 - d_1^3)] \div 12$ (See page 6-19, ASD, 9th edition)

$= 12 \times (12^3 - 10.50^3) \div 12\ in^4$
$= 570.375\ in^4$
$A_1 = (0.75 \times 12.00 \times 2)\ in^2 = 18\ in^2$

$I_{xx2} = (0.5 \times 10.50^3 \times 2) \div 12\ in^4$
$= 96.47\ in^4$
$A_2 = (0.50 \times 10.50 \times 2)\ in^2 = 10.50\ in^2$

Where : $b = 12$ in
$d = 12$ in.
$d_1 = 10.50$ in
$C_{yy} = 6$ in

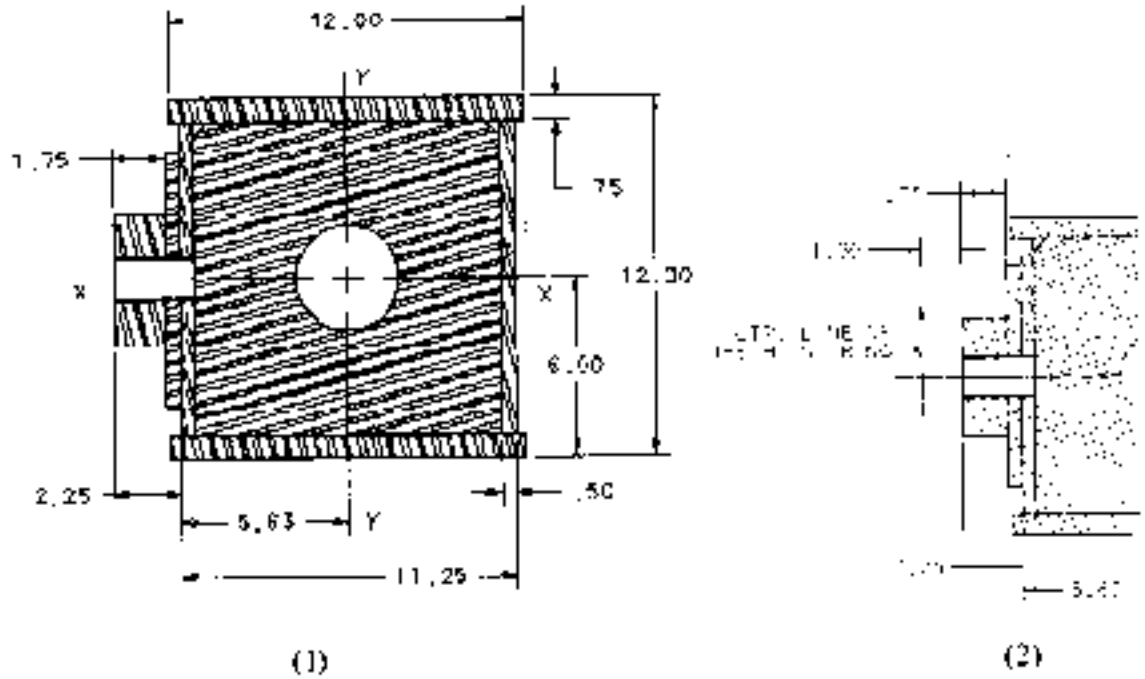

Figure 4. The cross section view of the outer race frame cut through the major radial plane around the lifting lug area.

$I_{xx} = I_{xx1} + I_{xx2} = (570.375 + 96.47)\ in^4$
$= 666.845\ in^4$
$S_{xx} = I_{xx} \div C = 111.14\ in^3$
$A = A_1 + A_2 = 28.50\ in^2$

Similar approach can find that:

$I_{yy1} = 10.50 \times (11.25^3 - 10.25^3) \div 12\ in^4$
$= 303.57\ in^4$

$I_{yy2} = (0.75 \times 12^3 \times 2) \div 12 \ \text{in}^4$
$= 216 \ \text{in}^4$

$I_{yy} = I_{yy1} + I_{yy2} = 519.57 \ \text{in}^4$

$S_{yy} = 92.37 \ \text{in}^3$
where $C_{xx} = 5.625$ in

Material of the Outer race frame (See drawings ME-436905, ME-436945 and ME-436947): ASTM A36

$F_t = 58$ ksi,
$F_y = 36$ ksi
$F_{b1} = 0.6 \ F_y = 21.6$ ksi (Allowable bending stress per "ASM"
$F_{s1} = 0.4 \ Fy = 14.4$ ksi (Allowable shear stress per "ASM")
$F_{b2} = F_{s2} = F_y / 3 = 12$ ksi (Allowable tensile and shear stress per "Below the Hook Lifting Devices", pick the lesser value as the final allowable stresses:

$F_b = F_{b2} = 12.00$ ksi
$F_s = F_{s1} = 12.00$ ksi

To find the working computed stresses subject the defined boundary condition:

$F_b = M_{max} \div S_{xx} = 309.131 \ \text{lbs-in} \div 111.14 \ \text{in}^3$
$= \underline{2.782 \ \text{ksi} < F_b = 12.00 \ \text{ksi}}$

$F_s = V_{max} \div A = 11{,}667 \ \text{lbs} \div 28.50 \ \text{in}^2$
$\underline{0.41 \ \text{ksi} < F_s = 12.00 \ \text{ksi}}$

The computed working stresses are satisfactory subject to the applying load.

To find the maximum deflection under the boundary condition of three lifting lug:

$\delta_{max} = 0.0069 \ w \ L_{1,0}^4 / EI_{xx}$ (See figure 2 of page 3)
$= 0.0069 \times 44.04 \ \text{lbs/in} \times 264.94^4 \ \text{in}^4 \div 30 \times 10^6 \ \text{psi} \times 666.845 \ \text{in}^4$
$1{,}497{,}223{,}134 \ \text{lbs-in}^2 \div 2.000535 \times 10^{10} \ \text{lbs-in}^2$
$= \underline{0.07484 \ \text{in}}$ (between two lifting lugs)

<u>Welding calculations for the lifting lug:</u>

The configuration and dimensions can find from the figure 3, figure 4 and figure 5. There are reinforcing plate (8.50" x 6.0"x0.5") and stud (4.50" dia x 1.75") additional to the base main plate, treating the welds as a line, it is found that: (per page 276, table 5.18.1, part 6, "Steel Structures" by C. Salmon & J. Johnson, 3rd edition)

The computed welding geometric properties of the reinforcing plate (8.5" x 6.0" x 0.5"):
d = 8.50", b = 6.00", t = 0.50"

$L_{w1} = 2\,(8.5+6) = 29''$ length of the welds

$I_{xx1} = d^2\,(3b + d)/\,6$

$= 319.1\ in^3$

$S_{xx1} = d\,(3b+d)/\,3$

$= 75.08\ in^2$

The computed welding geometric properties of the reinforcing stud (4.5" dia. x 1.75"):

$r = 2.25$ inch, $t = 1.75''$

$L_{w2} = 2\,\pi\,r = 14.14''$ length of the welds

$I_{xx2} = \pi\,r^3 = 35.78\ in^3$

$S_{xx2} = \pi\,r^2$

$= 15.90\ in^2$

The Moment at the welding area(s) subject to the applying load.

(Refer to figure 4 of page 5)

1. The moment @ the 8.5" x 6.0" x 0.50" reinforcing plate area:
   $M_{plt} = (1.50'' + 1.75'' - 0.50'') \times V_{max}$
   $= 43,752$ lbs-in
2. The moment @ the 4.50 dia x 1.75" stud area:
   $M_{stud} = (1.50'' + 1.75'') \times V_{max}$
   $37,918$ lbs-in

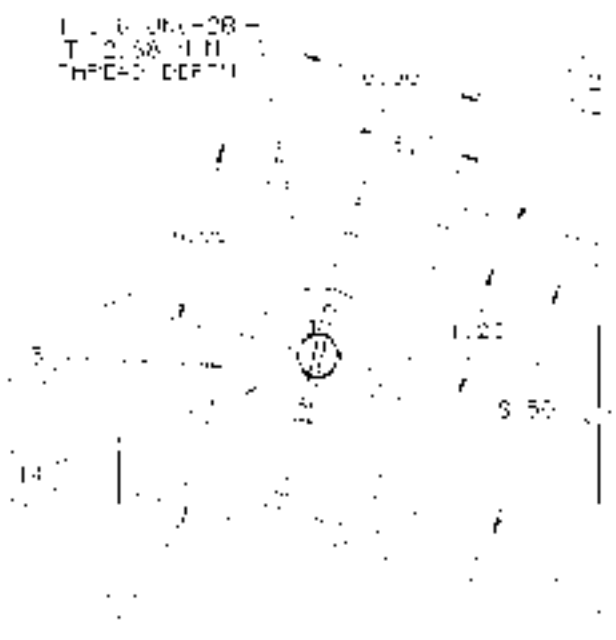

Figure 5 The dimension of the lifting lug weldment.

The computed working stresses subject to the applying load and the weld sizes.

$f_{v1} = V_{max} / L_{w1} = 11{,}667$ lbs / 29 in
403 lbs/in
$f_{b1} = M_{pl} / S_{xxl} = 43{,}752$ lbs-in / 75.08 in^2
= 583 lbs/in

$f_{r1} = (f_b^2 - f_{v1}^2)^{1/2} = (583^2 + 403^2)^{1/2}$
= 709 lbs/in

C_1 = combined working load per unit length ÷ (effective factor × allowable Stress of the weld metal)
(709 lbs/in) ÷ (0.707 x 21 ksi)
= **0.05 in** < 0.31 in (designated weld size in the area with consideration of the minimum size requirement of the fillet weld))
Where: C_1 is the size of the welds for the reinforcing rectangular plate.

$f_{v2} = V_{max} / L_{w2} = 11{,}667$ lbs / 14.14 in
= 826 lbs/in
$f_{b2} = M_{rd} / S_{xx2} = 37{,}918$ lbs-in / 15.90 in^2
2,385 lbs/in

$f_{r2} = (f_{b2}^2 + f_{v2}^2)^{1/2} = (826^2 + 2{,}385^2)^{1/2}$
= 2,524 lbs/in

C_2 = combined working load per unit length ÷ (effective factor × allowable Stress of the weld metal)
(2,524 lbs/in) ÷ (0.707 x 21 ksi)
= **0.17 in** < 0.38 in (designated weld size in the area with consideration of the minimum size requirement of the fillet weld).)
Where: C_2 is the size of the welds for the reinforcing round stud.

The designated weld sizes are satisfactory subject to the boundary condition.

<u>To compute the pull out force from the base metal when using standard hoist ring (1½ -6, UNC-2B) subject the lifting lug design specification:</u>

There are two approaches to compute the pull out force P_{out} from the base metal:

1. Per eq. 5.3.2.1-1, section 5.3.2.1, part I-A of "Aluminum Design Manual" 6th edition,

$P_{out} = 0.85\ t_b\ D\ F_{tu}$
= 0.85 x 2.75 in x 1.50 in x 58 ksi
= 203 kip (per lifting lug) > 35 kip (W_{tl}, a conservative assumption)

where: t_b the thread engage length on base metal (see figures 3, 4 & 5).
D the nominal dia. of the connecting hoist ring bolt
F_{tu} The tensile strength of the base metal (ASTM A36).

2. Per A-9, "Fastener Standards" 6th edition, by Industrial Fasteners Institute", 1988

$P_{(s)} = F_s * A_{is}$

$= 12.0 \text{ ksi} \times \pi \, n \, L_e \, D_{smin} [\, 1/2n + 0.57735 \, (D_{smin} - E_{nmax})]$

$= 12.0 \text{ ksi} \times \pi \times 6 \times 2.75 \text{ in} \times 1.4976 \text{ in} \times [\, 1/12 + 0.57735 \, (1.4976 - 1.4022) \text{in}]$

$12.0 \text{ ksi} \times 77.63 \text{ in}^2 \times 0.1384$

$= 128.93$ kip (per lifting lug) > 35 kip ($W_{(1)}$, a conservative assumption)

where:

A_{is}: Thread stripping area (shear area) of the internal thread

$= \pi \, n \, L_e \, D_{smin} [\, 1/2n - 0.57735 \, (D_{smin} - E_{nmax})$

L_e: length of the thread engagement

n: threads per inch

$D_{s\,min}$: Minimum major diameter of the external thread

$E_{n\,max}$: Maximum pitch diameter of the internal thread.

The designated internal thread (with the base material) are satisfactory subject to the applying load with 2 different analysis approaches.

FEA model and the Results for the Outer Race Frame Under Three Lifting Points:

A FEA model also was built to simulate the boundary condition of the DECam Rotator Outer Race frame under three (3) point lifting case.

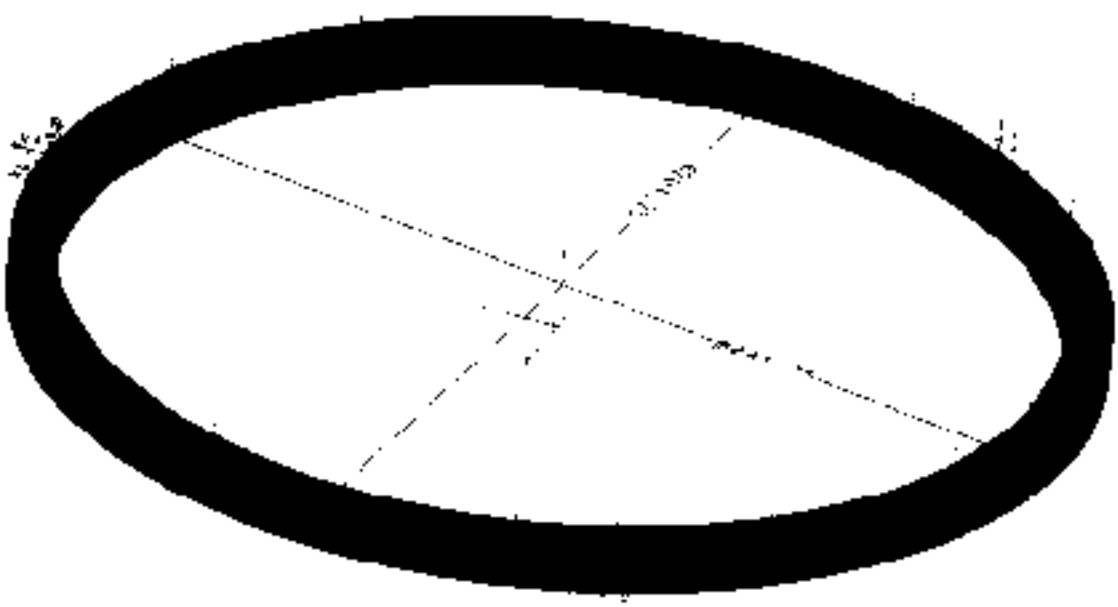

Figure 6 The FEA model of the DECam Outer Race frame under 3 lifting points case.

Where the cross section details of the actual frame and the FEA frame are showing from figure 7 of page 10. The configuration of the outer race frame cross section using for FEA model is a simple and conservative approach.

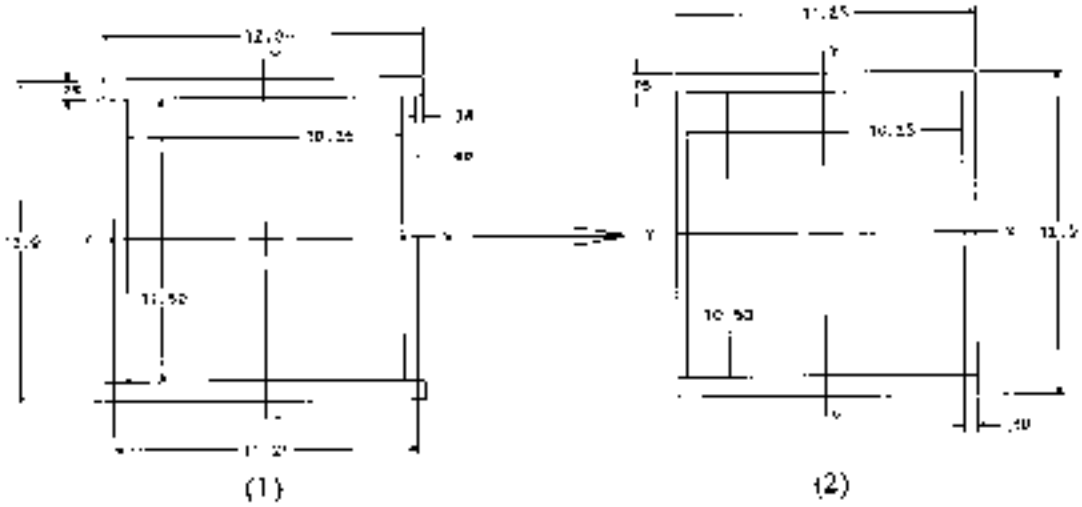

Figure 7. The cross-section of the actual outer race frame vs. the FEA model frame.

The FEA model frame from figure 6 of page 9 simulated the geometrical dimension and boundary condition as followings:

- Cross sectional dimension of the circular frame shown on figure 7,2.
- Outside dia. of the frame: 254.25"
- Inside dia. Of the frame: 241.75'
- Height of the frame: 12.00"
- Restraints three lifting pads with simple suppors
- The total weight (frame dead load plus the external live load applying to the top plate of the frame) is 35,000 lbs.
- Assumed the isotropic steel material of the outer race frame.

The results of the simulating Outer Race frame FEA model under three lifting points case found out that:

Maximum Von Mises stress: 4.75 ksi (See figure 8),

$f_b = f_{xx} = 4.512$ ksi < F_b = 12.00 ks. (see figure 9)

$f_v = f_{xz} = 1.995$ ksi < F_v = 12.00 ksi (see figure 9)

Total reaction forces: 35,000 lbs (See figure 11)

Maximum deflection: $\delta_{maxFEA} = 0.0487"$ (See figure 8 and figure 10)
(also see page 6 where the max. deflection from manual calculation is: δ_{max} 0.0749")

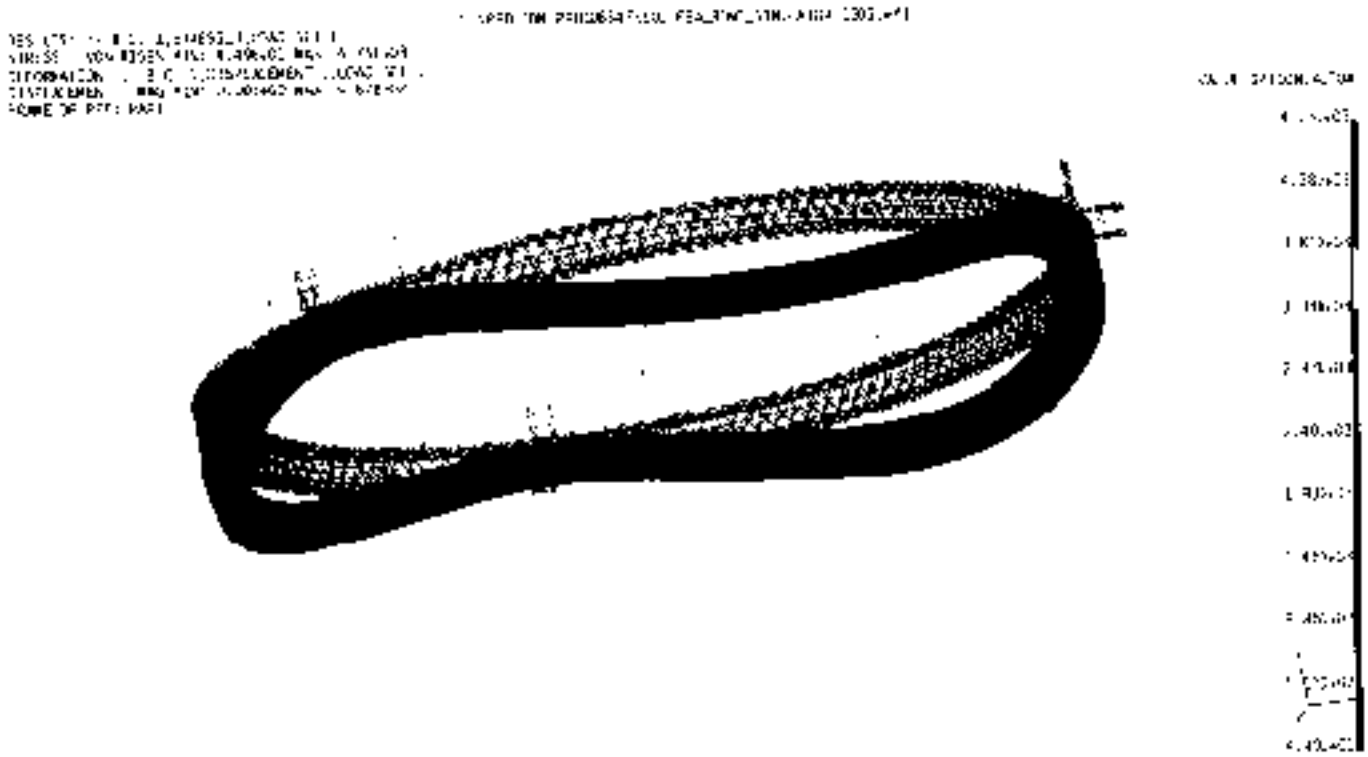

Figure 8. The stress and deflection chart of the Outer Race frame under three lifting points boundary condition.

Page 1

I-DEAS 12 NX Series m4: Simulation 04 Jan-10 15:05:44
C:\PPD_IDM_PPD106547\ECC_FEA_RING_SIMULATOR_1200.mdl

Group ID : None
Result Set : 3 - B.C. 1,STRESS_3,LOAD SET 1
Report Type : Contour Units : IN
Result Type : STRESS
Frame of Reference: Part Data Component: X-Component

	Stress XX	Stress-XY	Stress-YY	Stress-XZ	Stress-YZ	Stress-ZZ
	2504	6187	11259	16754	5741	16200
Maximum	5.054E+03	1.338E+03	3.194E+02	1.996E+02	1.237E+03	4.927E+03
	1405	5696	11249	12650	5777	148.8
Minimum	-4.956E+03	-1.468E+02	-2.931E+03	1.879E+03	-1.258E+03	4.512E+03
Average	-2.943E+00	4.928E-01	5.091E+00	6.679E-01	-2.169E-01	-2.465E+00

Figure 9. The stresses of the Outer Race frame under three lifting points B.C.

Page 1

I-DEAS 12 NX Series m4: Simulation 04-Jan-10 15:17:50
C:\PPI_IDM_PPD\06547\ECC_FEA_RING_SIMULATOR_1209.mf1

Group ID : None
Result Set : 1 - B.C. 1,DISPLACEMENT 1,LOAD SET 1
Report Type : Contour Units : IN
Result Type : DISPLACEMENT
Frame of Reference: Part Data Component: Y-Component

	Displa-X	Displa-Y	Displa-Z	Displa-RX	Displa-RY	Displa-RZ
	2149	2506	1956	1	1	1
Maximum	1.083E-03	1.210E-04	3.000E-03	0.000E+00	0.000E+00	0.000E+00
	2215	2658	2039	1	1	1
Minimum	-1.112E-03	-4.865E-02	-3.011E-03	0.000E+00	0.000E+00	0.000E+00
Average	-8.119E-05	-2.524E-02	-8.601E-06	0.000E+00	0.000E+00	0.000E+00

Figure 10, The displacements of the Outer Race frame under three lifting points B.C.

Page 1

I-DEAS 12 NX Series m4: Simulation 04-Jan-10 15:15:33
C:\PPD_IDM_PPD\06547\ECC_FEA_RING_SIMULATOR_1209.mf1

Group ID : None
Result Set : 2 - B.C. 1,REACTION FORCE 2,LOAD SET 1
Report Type : Contour Units : IN
Result Type : REACTION FORCE
Frame of Reference: Part Data Component: Y-Component

	Reacti-X	Reacti-Y	Reacti-Z	Reacti-RX	Reacti-RY	Reacti-RZ
Total	-1.221E-03	3.500E+04	-2.197E-02	0.000E+00	0.000E+00	0.000E+00
	32	29	2608	2	2	2
Maximum	1.261E+04	4.121E-03	1.224E+04	0.000E+00	0.000E+00	0.000E+00
	31	52	2633	2	2	2
Minimum	-1.317E+04	-3.145E+03	-1.914E-04	0.000E+00	0.000E+00	0.000E+00
Average	-9.391E-05	9.723E+03	-6.104E-06	0.000E+00	0.000E+00	0.000E+00

Figure 11, The reaction forces of the Outer Race frame under three lifting pt. B.C.

Conclusions:

In order to accurately investigate and study the structural and mechanical behavior of the DECam Simulator Outer Race frame under the three lifting lug case, it is analyzed and calculated by two approaches:

- Manual mathematically computation method.
- Finite Element Analysis (FEA) method.

It is also very conservatively to choose the smaller value as the "*allowable stress*" from the two applicable codes respectively.

The computed working bending stress and shear stress both are much smaller than the allowable bending stress and allowable shear stress respectively.

The computed maximum deflection between two lifting lugs is about 0.0784" vs. the maximum deflection from FEA is about 0.04866".

The designated welding size of the lifting lug is larger than the computed working welding size (see page 8).

The computed thread pull out force from lifting lug is much larger than the applying load under the current boundary condition.

To this end, the design of the DECam Simulator Rotator Outer Race frame and its lifting lugs are satisfactory subject the lifting condition as it defined from the above.

References:

The detail drawings of the DECam Simulator Rotator:
http://des-docdb.fnal.gov:8080/cgi-bin/ShowDocument?docid=3660