Fermilab

Particle Physics Division

12-01-01

Mechanical Department Engineering Note

Number: MD-Eng-220 Date: December 28, 2009

Project: DES TELESCOPE SIMULATOR

Project Internal Reference:

Title: Way Frame for NW Platform

Author(s): Robert J. Woods

Reviewer(s): M. Buckenbrot

Key Words: DECAM, DES, TELESCOPE SIMULATOR, NW PLATFORM, Way Frame

Abstract/Summary:

The Way Frame assembly consists of three smaller frames as shown in Figure 1. The new DES Camera is mounted to the "Hexagon" Frame for insertion into the Telescope Simulator. The "Hexagon" Frame is supported by the Adaptor Support Subassembly that permits horizontal adjustment of the camera's position relative to the telescope. The Adaptor Support Subassembly slides along the long dimension of the Way Frame allowing the camera to be moved in and out of the telescope. This whole Way Frame Assembly is supported by the NW Platform.

The purpose of this calculation is to check the critical connections of this assembly for the loads of the new camera.

Applicable Codes:

Manual of Steel Construction Allowable Stress Design, American Institute of Steel Construction, Inc., Ninth Edition

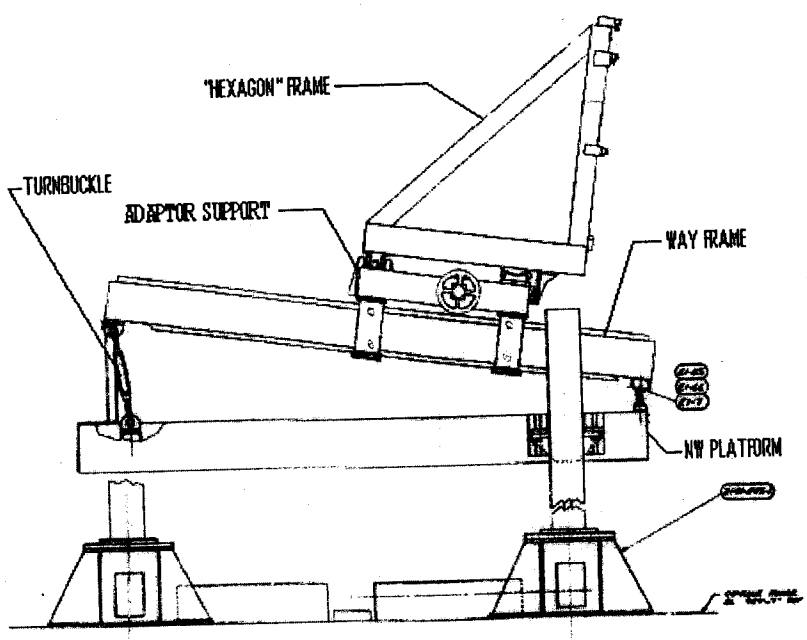

Figure 1. The Way Frame Assembly

DES TELESCOPE SIMULATOR

WAY FRAME

R. J. WOODS
NOV. 20, 2009

CHECK WAY FRAME FOR ADD'L CAMERA LOAD @ LONGER MOMENT ARM:

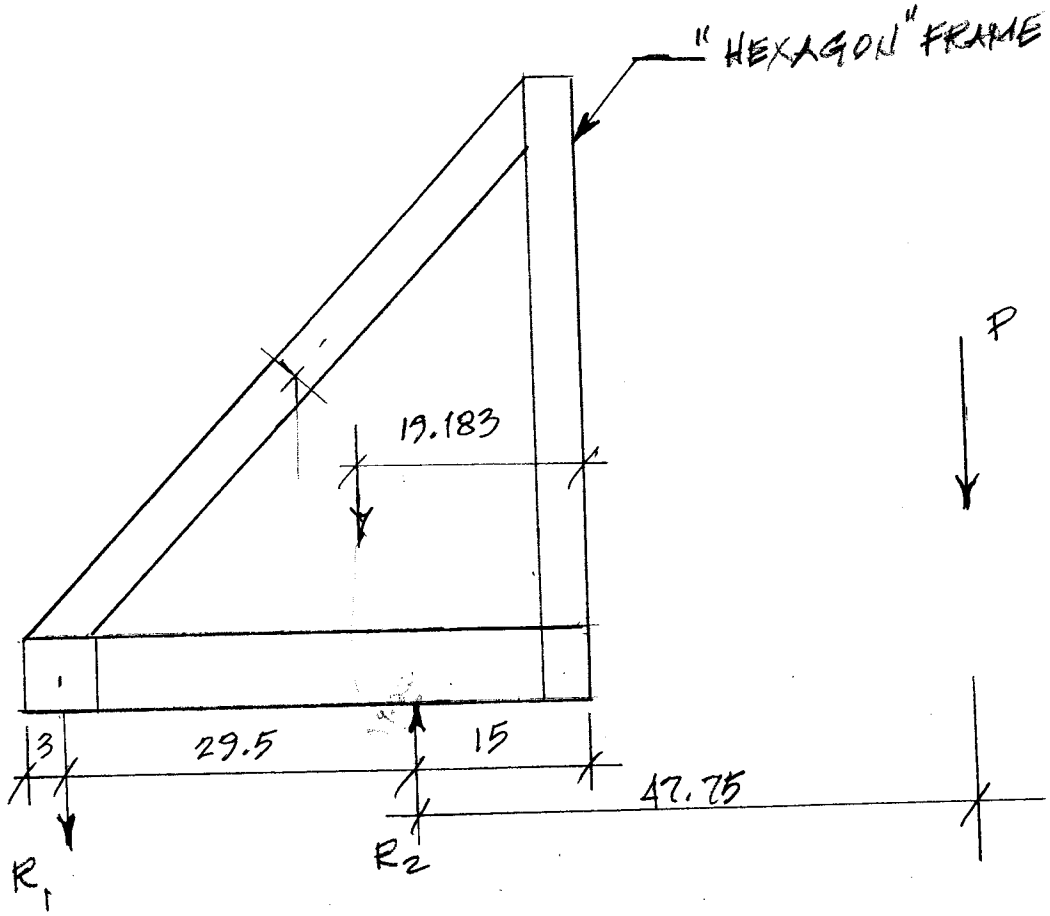

LOAD P = 3443 FROM ECHI DOC 2371-V4

DESIGN FOR P = 5000#

TOTAL FRAME DEAD LOAD = 934#

APPROX. HORIZ C.G = 28.317" FROM LEFT END

TOTAL LOAD:

$$R_1 = \left(-47.75''(5000^{\#}) + (4.183'')(934^{\#})\right) / 29.5''$$
$$= -7960.8$$

$$R_2 = \left(77.25(5000) + (25.318)(934)\right) / 29.5$$
$$= 13,894.8^{\#}$$

FRAME LOAD ONLY

$R_1 = (934(4.183))/29.5$
$= 132.4^{\#}$

$R_2 = ((934)(25.317))/29.5$
$= 801.6^{\#}$

ALLOWABLE LOADS ON TYCHOWAY BEARINGS:

21050 = $4330^{\#}$
21150 = $17,260^{\#}$

@ R_1

TOP BRG = 21150
LOAD = 7960.8/2
= 3980.4 < $17,260^{\#}$ ok

BOT. BRG = 21050
LOAD = $132.4^{\#}/2$
= $66.2^{\#}$ < $4330^{\#}$ ok

@ R_2

TOP BRG = 21050
LOAD = $0.0^{\#}$ < $4330^{\#}$ ok

BOT BRG = 21150
LOAD = $13894.8^{\#}/2$
= $6,947.4^{\#}$ < $17,260^{\#}$ ok

∴ TCHOWAY BRGS 21050 & 21150 OK FOR NEW LOADS

WAY FRAME SUBASSEMBLY

LOAD ON HINGE BOLTS

SUBFRAME FABRICATED FROM 4x4x1/4 HHS.

MOMENT FROM OCTAGON FRAME = 47.75" x 5000#
= 238750 #-IN

SUBFRAME SPAN = 116" - (2" + 2")
= 112"

END REACTIONS = 238750/112
= 2132# TOTAL
= 2132/2
= 1066# @ EA. HINGE

ADD'L LOAD FROM OCTAGON FRAME = 802/2
= 401#

ADD'L LOAD FROM SMALL FRAME = 300#/4
= 75#

ADD'L LOAD FROM LARGE FRAME = 1000#/4
= 250#

TOTAL BOLT LOAD = 1066 + 401 + 75 + 250
= 1792#

FOR 3/8" ϕ BOLT (GRADE 2 MIN.)

FV = 10 KSI SINGLE SHEAR
= 20 KSI DOUBLE SHEAR

ALLOW. LOAD = 20,000 x 0.1104 IN²
= 2209# > 1792# OK

LOAD ON TURNBUCKLE

TENSION = 238750/112 = 2132# (NEGLECT DEAD LOAD FROM SUPPORT FRAMES)

ALLOW. MANUFACTURER'S LOAD RATING = 5,200# > 2132#
OK

COMPRESSION
(EMPTY OCTAGON FRAME)
LOAD OF "HEXAGON" FRAME @ REAR POSITION

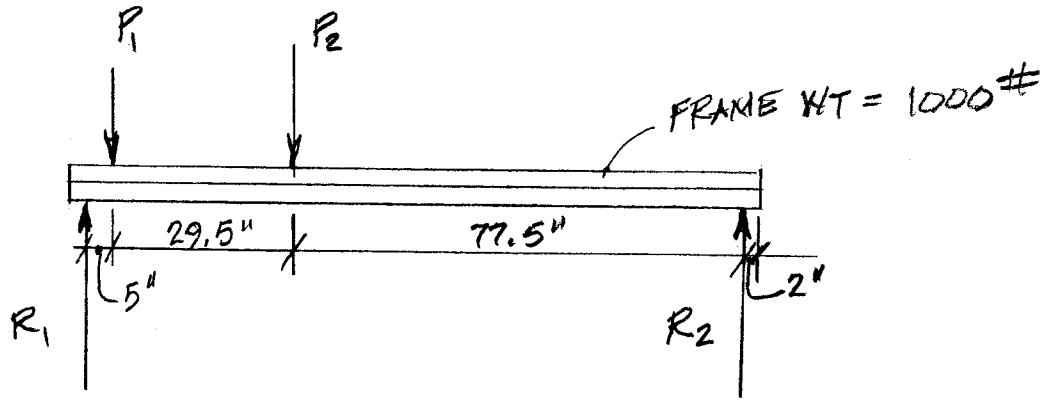

$P_1 = 132.4 + 300/2$
$= 282.4^{\#}$

$P_2 = 801.6 + 300/2$
$= 951.6$

$R_1 = (((282.4(29.5+77.5)) + (951.6(77.5)))/112) + 1000/2$
$= 1428^{\#}$

USE $1500^{\#}$

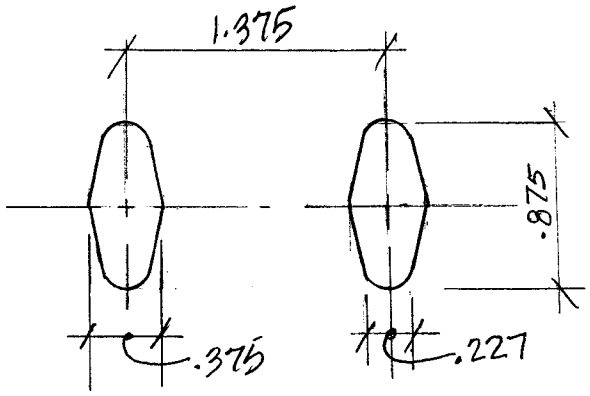

TURNBUCKLE SECTION

$A = 0.478 \text{ IN}^2$ $F_y = 30^{KSI}$
$E = 29{,}000^{KSI}$

$r = \sqrt{I/A} = \sqrt{\frac{0.021}{0.478}}$
$= 0.21 \rightarrow$

$Kl/r = \frac{1.0(9)}{0.21}$
$= 43$

$C_c = \sqrt{\frac{2\pi^2 E}{F_y}} = \sqrt{\frac{2\pi^2(29{,}000)}{30}}$
$= 138$

TURNBUCKLE (CON'T)

SINCE $Kl/r < C_c$ (AISC E2 P5-42)

$$F_a = \frac{\left[1 - \frac{(Kl/r)^2}{2C_c^2}\right] F_y}{5/3 + \frac{3(Kl/r)}{8C_c} - \frac{(Kl/r)^3}{8C_c^3}}$$

$$= \frac{\left[1 - \frac{(43.0)^2}{2(138)^2}\right] 30}{5/3 + \frac{3(43.0)}{8(138)} - \frac{(43.0)^3}{8(138)^3}}$$

$$= 16.04 \text{ KSI}$$

$$f_{a_x} = P/A = 1500/.478 = 3138 \text{ psi} < 16{,}000 \text{ psi} \quad \underline{\underline{ok}}$$

$$M = 1.375/2\,(1500) = 1031 \#\text{-IN} \qquad P = 1500 \#$$

$$f_{a_y} = P/A \pm \frac{Mc}{I_y}$$

$I_{y\,PART} = 0.00175 \text{ IN}^4$ * (∥ axis th.)

$$I_y = 2(I_{PART} + Ad^2) \; *$$
$$= 2(0.00175 + 0.239(0.6875)^2)$$
$$= 0.229 \text{ IN}^4$$
$$Mc/I = \frac{1031(0.6875)}{0.229} = 3090 \text{ KSI}$$
$$P/A + \frac{Mc}{I} = 3138 + 3090 = 6227 \text{ psi} < 16{,}000 \text{ psi} \quad \underline{\underline{ok}}$$

∴ TURNBUCKLE ok IN COMPRESSION

* VALUE FROM IDEAS ANALYSIS

axial compression and bending: $\frac{f_a}{F_a} + \frac{f_{by}}{F_{by}} \le 1$

$$= \frac{3138}{10{,}000} + \frac{3090}{15{,}000} = .623 \le 1$$