Fermilab

Particle Physics Division
Mechanical Department Engineering Note

Number: MD-ENG- 114 Date: 02-15-07

Project Internal Reference: SCIBOONE

Project: SCIBOONE

Title: SCIBOONE WALL MOUNTED 12 FT JIB CRANE

Author: E.M. VILLEGAS

Reviewer(s): 2-26-07

Abstract Summary: CRANE WILL BE MOUNTED ON THE NORTH WALL APPROXIMATELY 12 INCHES FROM THE WEST WALL AND 6 INCHES FROM THE TOP SURFACE.
THE ALUMINUM BOOM IS 12 FEET IN LENGTH AND IS SUPPORTED BY TWO ONE INCH DIA RODS ATTACHED TO ¾-10 TURNBUCKLES.

Applicable Codes: ANSI B30.11-1980 MONORAILS AND UNDERHUNG CRANES

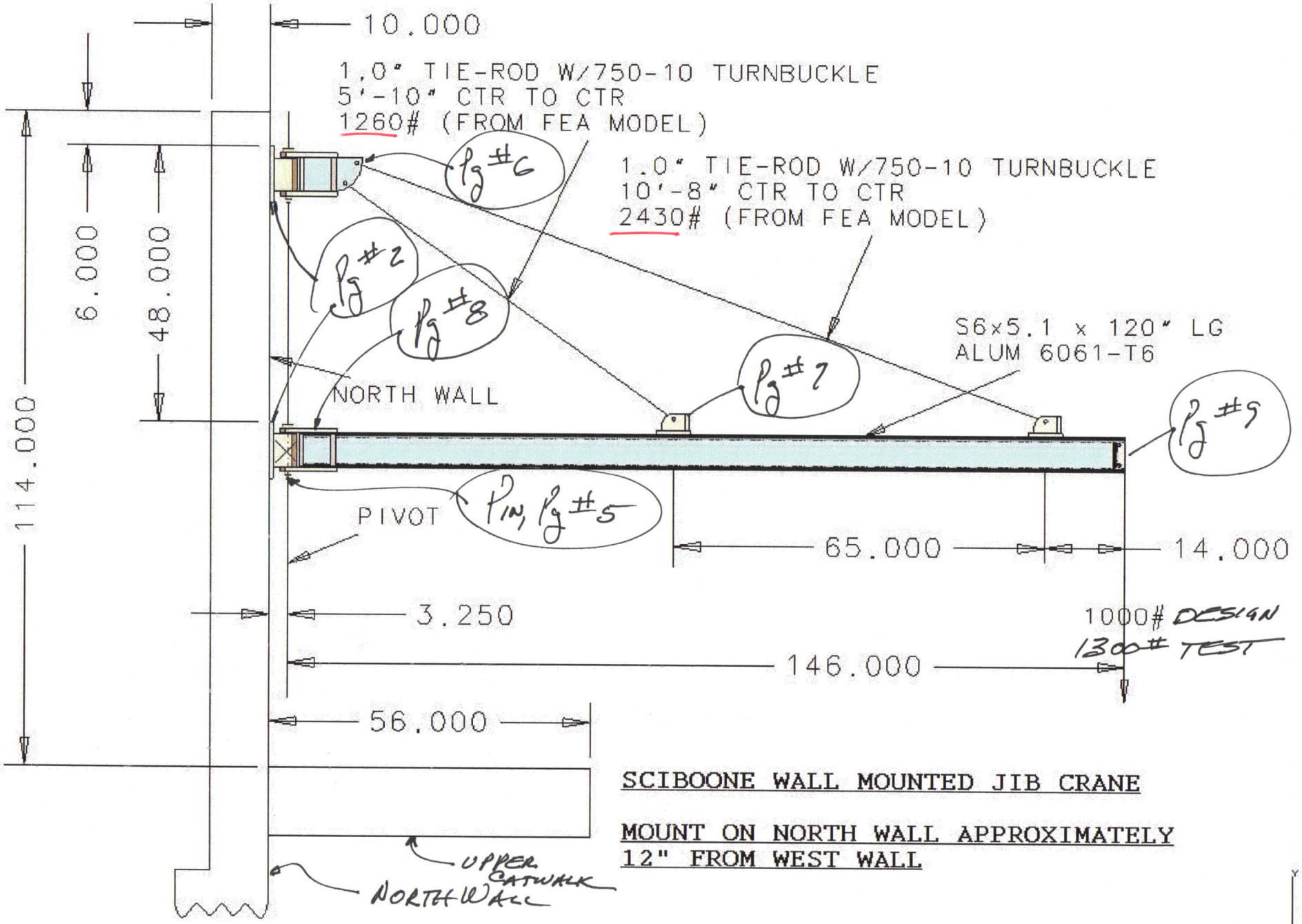

SCIBOONE WALL MOUNTED JIB CRANE

MOUNT ON NORTH WALL APPROXIMATELY
12" FROM WEST WALL

SEE Pg # 10, 11 & 12 FOR ANALYSIS

Pg #1

FERMILAB
ENGINEERING NOTE

SECTION	PROJECT	SERIAL-CATEGORY	PAGE
			1a

SUBJECT: UPPER BOOM SUPT
PIN, WELD & BOLT/HILTI ANCHOR

NAME: E.M. [illegible]
DATE: 01/19/07
REVISION DATE:

$$7 = \frac{146 \times 1300}{48} = 3954^{\#}$$

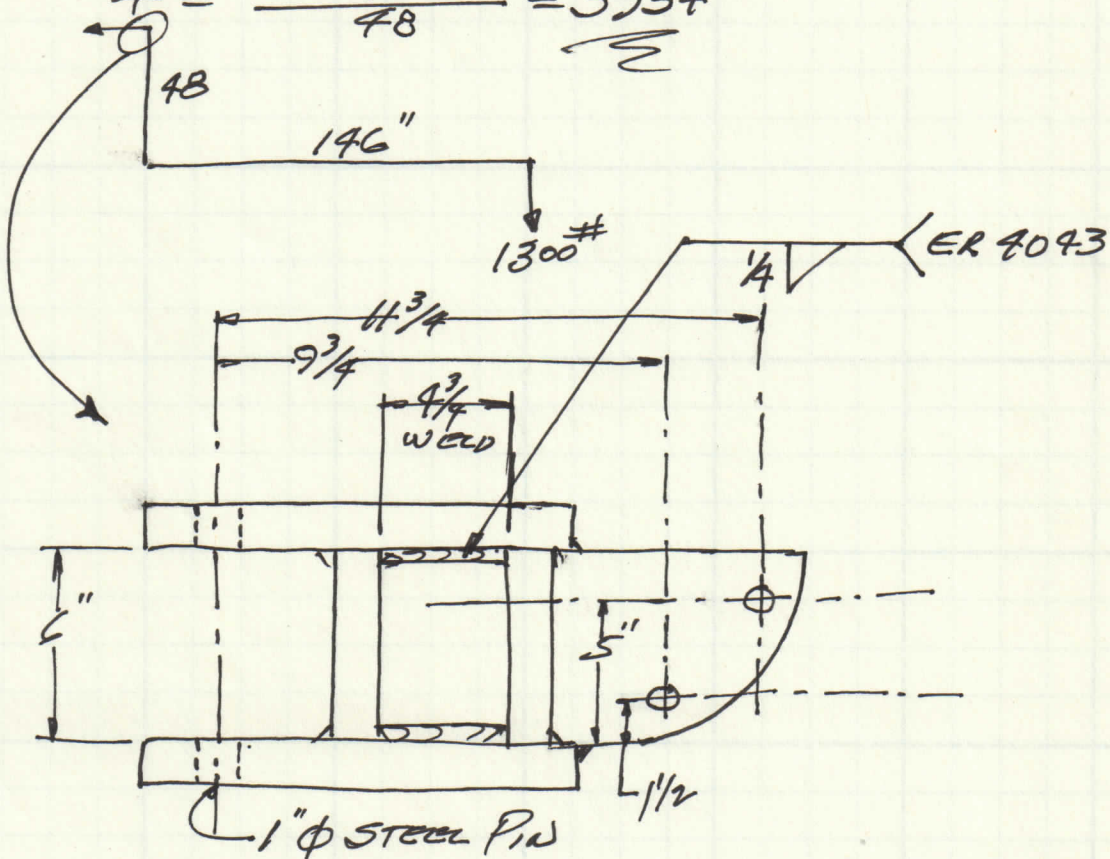

UPPER BOOM SUPT
SEE Pg # 6

SHEAR ON PIN $\Rightarrow f_v = \frac{7}{2(\pi/4)} = \frac{3954}{\pi/2} = 2517$ psi

ALLOWABLE FOR LOW CARBON STL. 30×10^3 psi YIELD $= .80 \times 30 \times 10^3 = 24 \times 10^3$ psi

1/4" WELD LENGTH $= 4.75 \times 4 = 19''$

1/4 WELD THROAT $= \frac{\sqrt{.25^2 \times 2}}{2} = .177''$

THROAT AREA $= .177 \times 19 = 3.363$ IN^2

$$f_v = \frac{3954}{3.363} = 1176 \text{ psi}$$

ALLOWABLE FOR 6061/ER4043 $= F_v = 4.4 \times 10^3$ psi

LOAD 7 IS SUPPORTED BY (4) HILTI DROP-IN ANCHORS

$\frac{3954}{4} = 989^{\#}$/ANCHOR

1/2" ANCHORS ARE RATED FOR $1000^{\#}$ IN TENSION WHEN USED IN 2000 psi CONCRETE - [SEE ADDENDUM A & B]

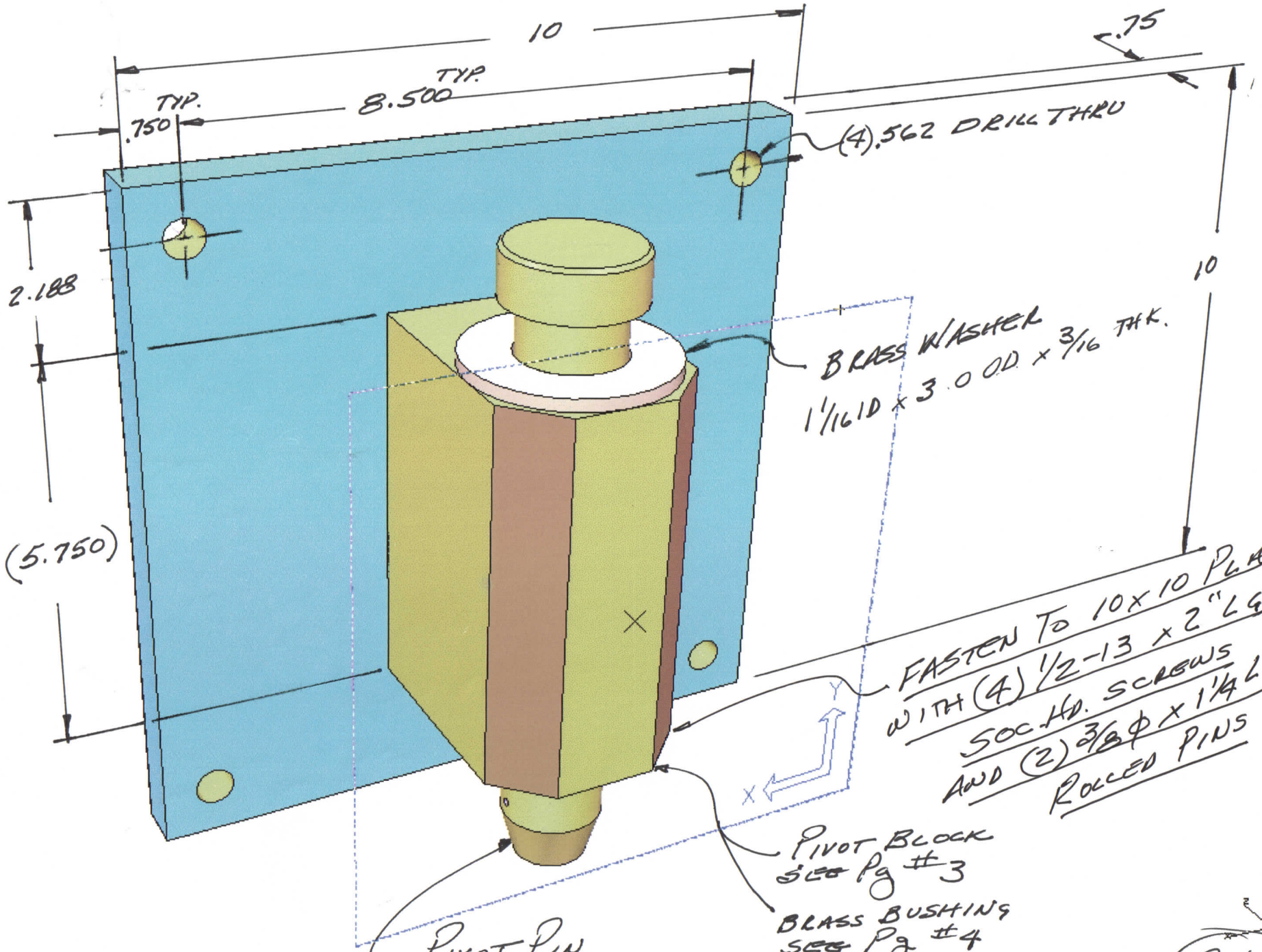

BOOM PIVOT ANCHOR

Pg #2

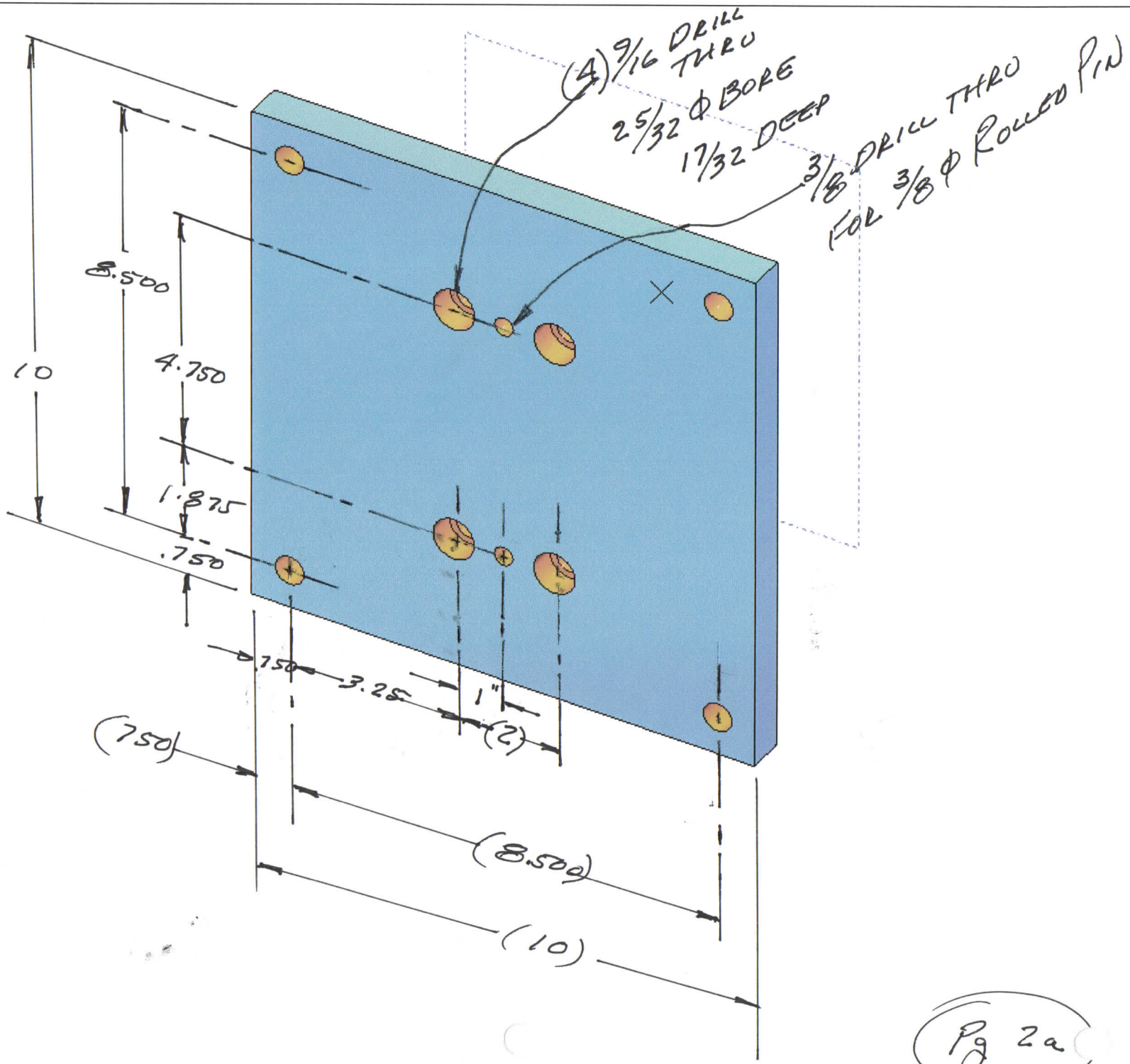
(4) 9/16 DRILL THRU
25/32 Φ BORE
17/32 DEEP
3/8 DRILL THRU
FOR 3/8 Φ ROLLED PIN
10
8.500
4.750
1.875
.750
.750
3.25
1"
(2)
(.750)
(8.500)
(10)

Pg 2a

Fig 26

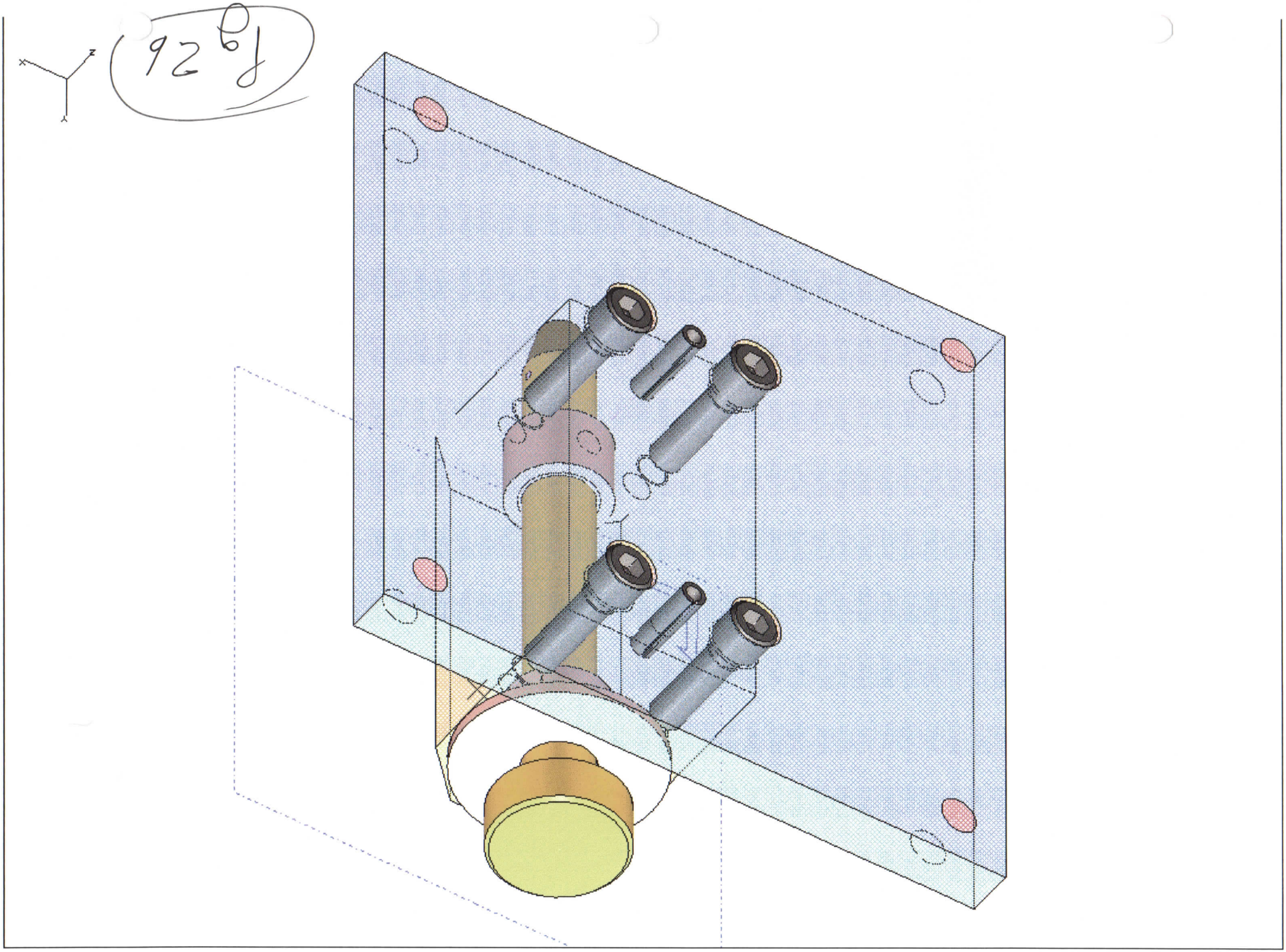

I-DEAS 12 NX Series m1: I-DEAS Visualizer

DISTRIBUTED ON 4 C'BORE HOLES

Display 1
3954LB_FORCE
B.C. 1,STRESS_2,LOAD SET 1
C:\PPD_IDM_PPD90896\EMV_SCIBOONE_JIB_CRANE_01-18-07.mf1
STRESS Von Mises Averaged Top shell
Min: 6.70E+01 lbf/in^2 Max: 2.60E+04 lbf/in^2
B.C. 1,DISPLACEMENT_1,LOAD SET 1
C:\PPD_IDM_PPD90896\EMV_SCIBOONE_JIB_CRANE_01-18-07.mf1
DISPLACEMENT XYZ Magnitude
Min: 0.00E+00 in Max: 2.45E-03 in
Part Coordinate System

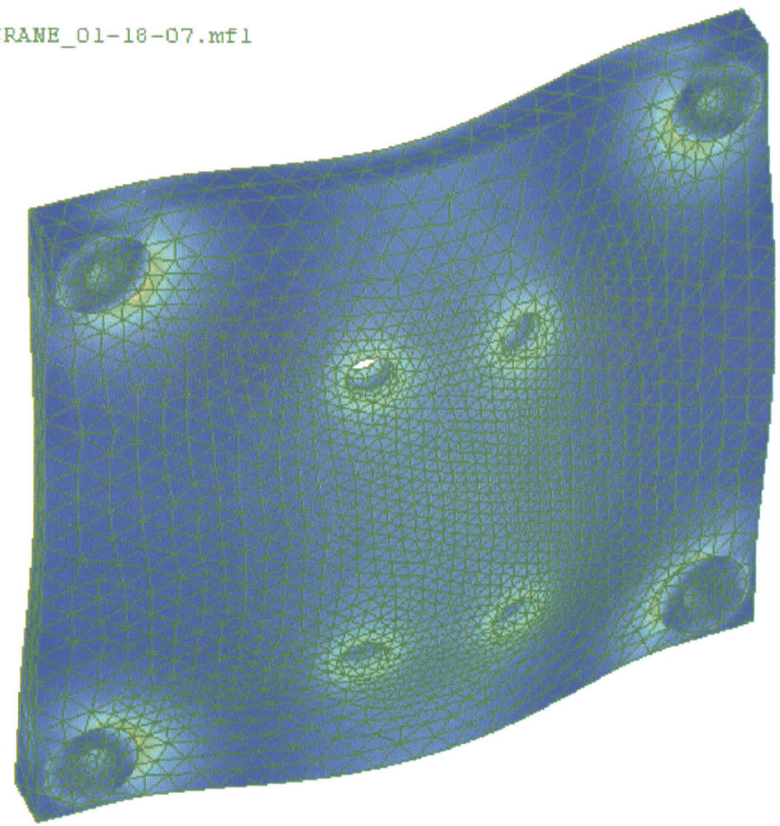

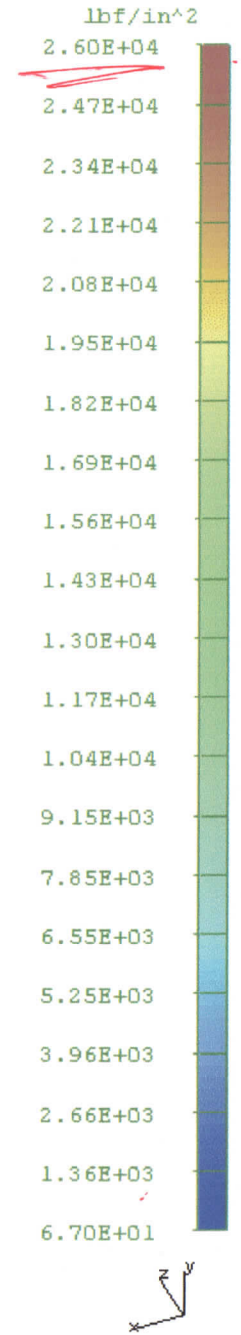

MAT'L : A36 STEEL

Pg #2e

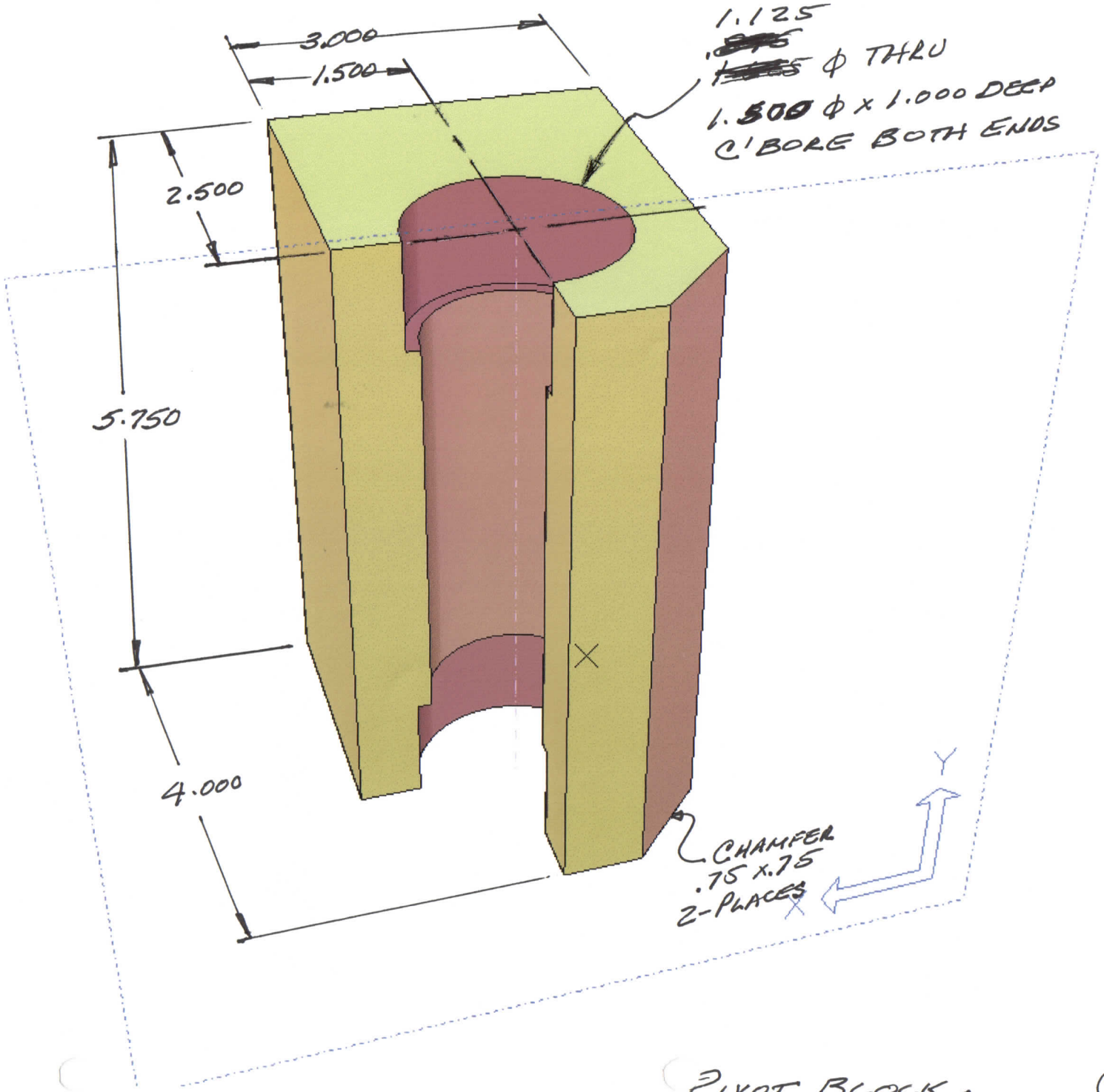

PIVOT BLOCK

Pg #

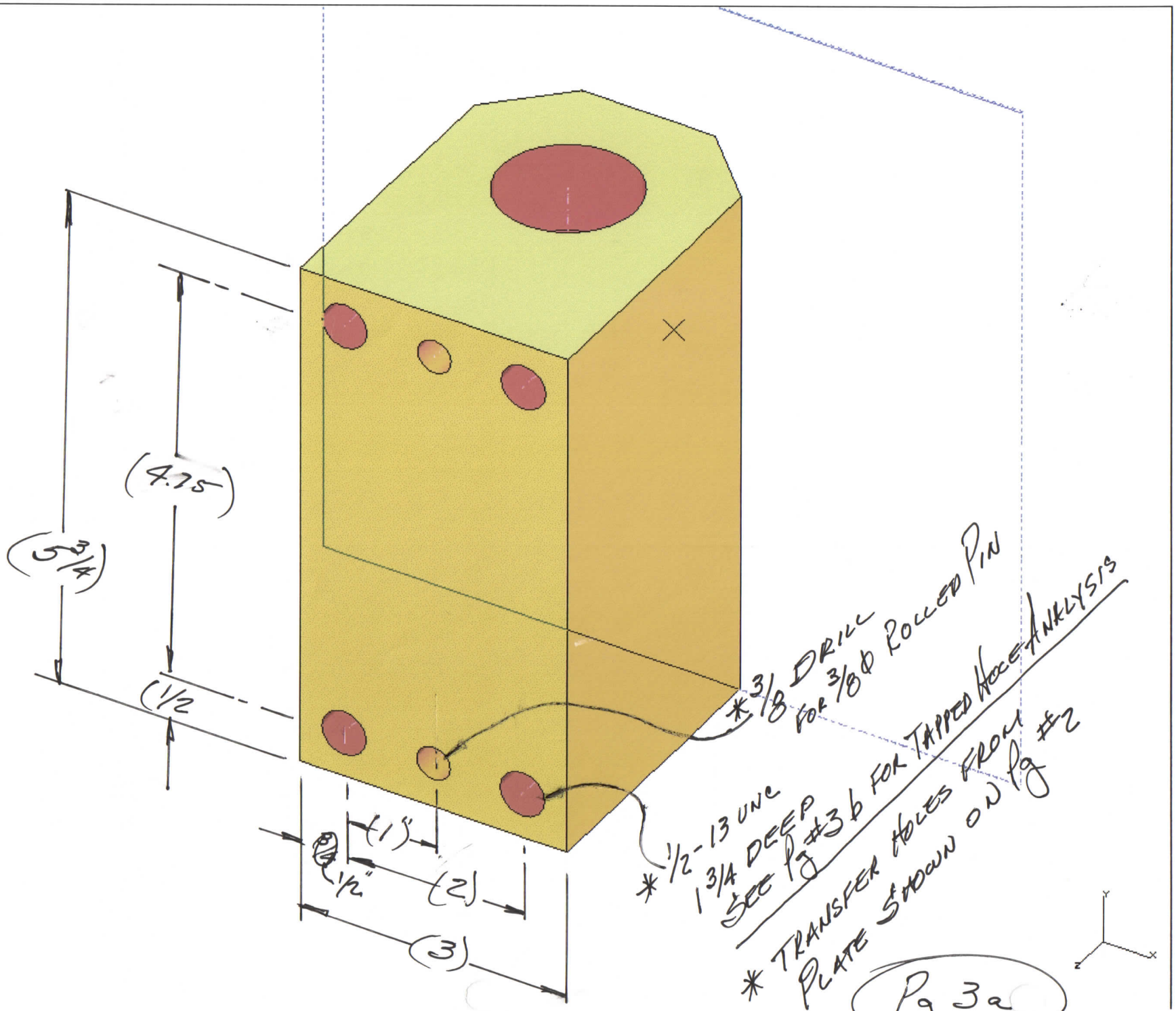
(4.75)
(5 3/4)
(1/2
(1)
1/2"
(2)
(3)
*3/8 DRILL FOR 3/8 Ø ROLLED PIN
*1/2-13 UNC 1 3/4 DEEP SEE Pg #3b FOR TAPPED HOLE ANALYSIS
* TRANSFER HOLES FROM PLATE SHOWN ON Pg #2
Pg 3a

Pg #3b

FERMILAB
ENGINEERING NOTE

SECTION	PROJECT	SERIAL-CATEGORY	PAGE

SUBJECT 1/2-13 UNC-2B SOC HD SCREW TAPPED INTO 6061-T6 ALUM

NAME E M Willegar

DATE 1/24/87

REVISION DATE

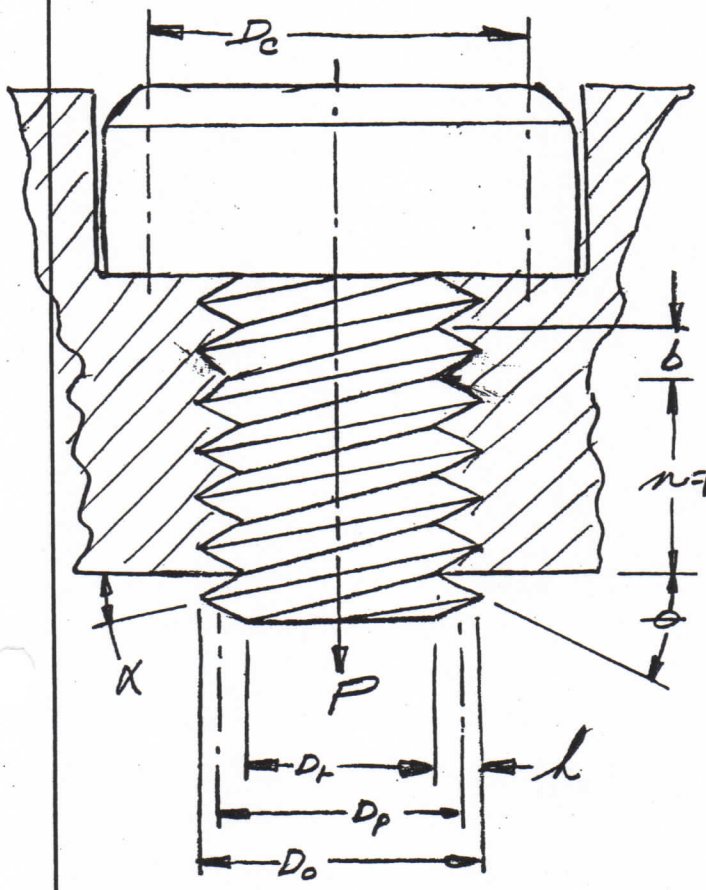

MAT'L: SCREW: STL ALLOY
TAPPED HOLE MAT'L ALUM 6061-T6

$F_b = 35 \times 10^3 \times .6$
$= 21 \times 10^6$ psi

$F_v = 35 \times 10^3 \times .4$
$= 14 \times 10^3$ psi

① $P = 1250^{\#}$ ⇐ DESIGN LOAD FOR JIB CRANE IS 989#

② $D_c = .625$

$D_o = .500$

③ $D_p = .4500$

$D_r = .4056$ EXT. (.4167 INT)

$p = .0769$

$h = .04719$ EXT (.04164 INT)

④ $\alpha = 3.1136°$ ($\tan^{-1}\alpha = \left(\frac{p}{D_p \pi}\right)$)

⑤ $\theta = 30°$

$b = .0673 \left(p - \frac{p}{8}\right)$

⑥ $f = .50$ (SCR. & TAPPED HOLE, STATIC,)

⑦ $f_c = .50$ (COLLAR, STATIC,)

$n = 20$ (# LOAD CARRING THREADS)

$$T = \overset{①}{P}\left[\frac{\overset{③}{D_p}}{2}\left(\frac{\tan\overset{④}{\alpha} + \overset{⑥}{f}/\cos\overset{⑤}{\theta}}{1 - \underset{⑥}{f}\tan\underset{④}{\alpha}/\cos\underset{⑤}{\theta}}\right) + \frac{\overset{⑦}{f_c}\,\overset{②}{D_c}}{2}\right]$$

$= 379$ IN-LB ⇒ 32 FT-LB

$f_b = \frac{3Ph}{\pi n D_o b^2} = 1{,}097$ psi (TH'D. BENDING STRESS)

$f_v = \frac{P}{\pi n D_o b} = 591$ psi (TH'D SHEARING STRESS)

$f_{vT} = \frac{16T}{\pi D_r^3} =$ N.A. (TORSIONAL SHEAR ON ROOT CYL OF SCREW.)

$f = \frac{4P}{\pi D_r^2} =$ N.A. (STRESS ON ROOT CYL.)

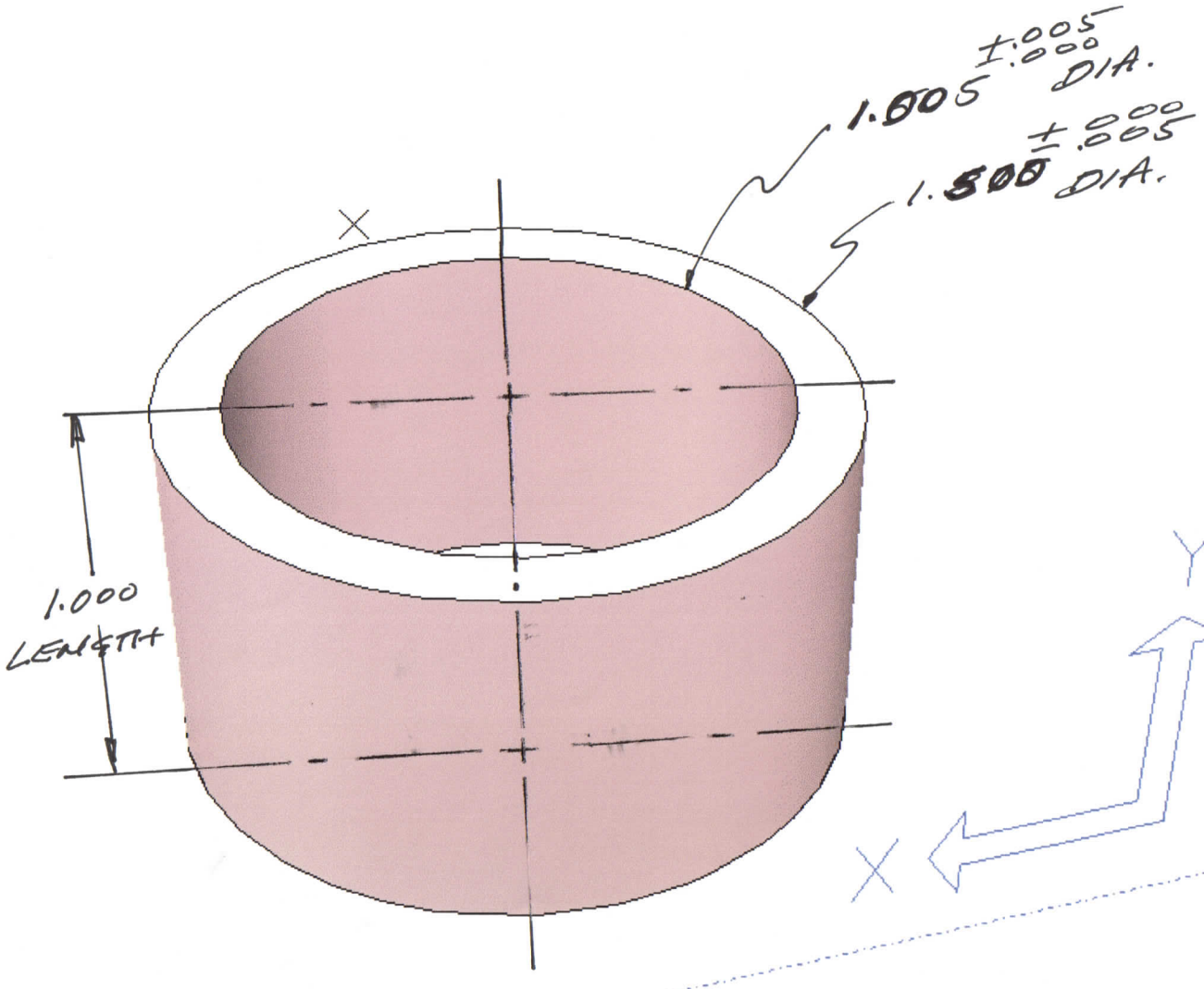

BRASS BUSHING

Pg #4

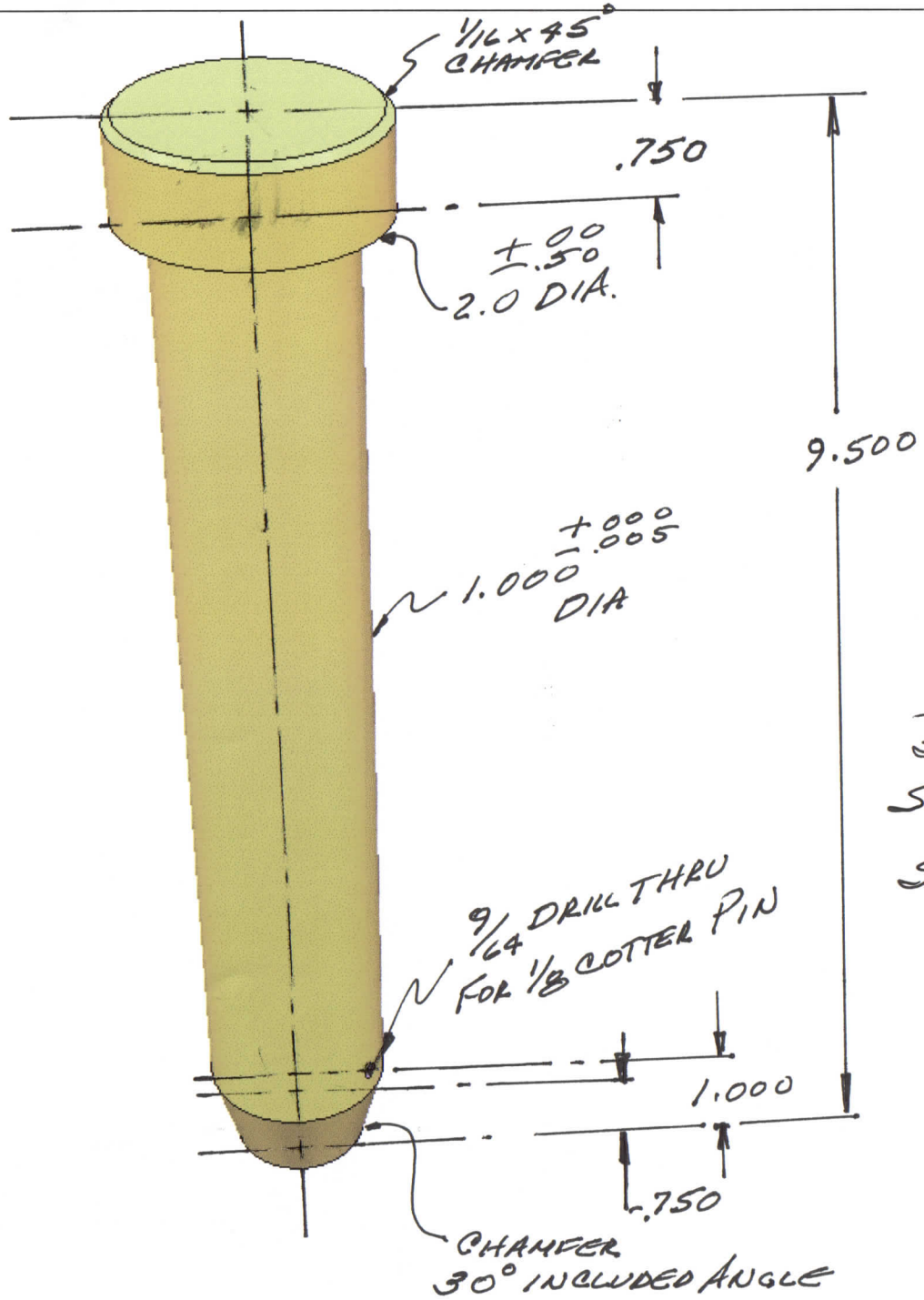

MATERIAL

STEEL low CARBON

SEE Pg #1a FOR SHEAR STRESS

Pg #5

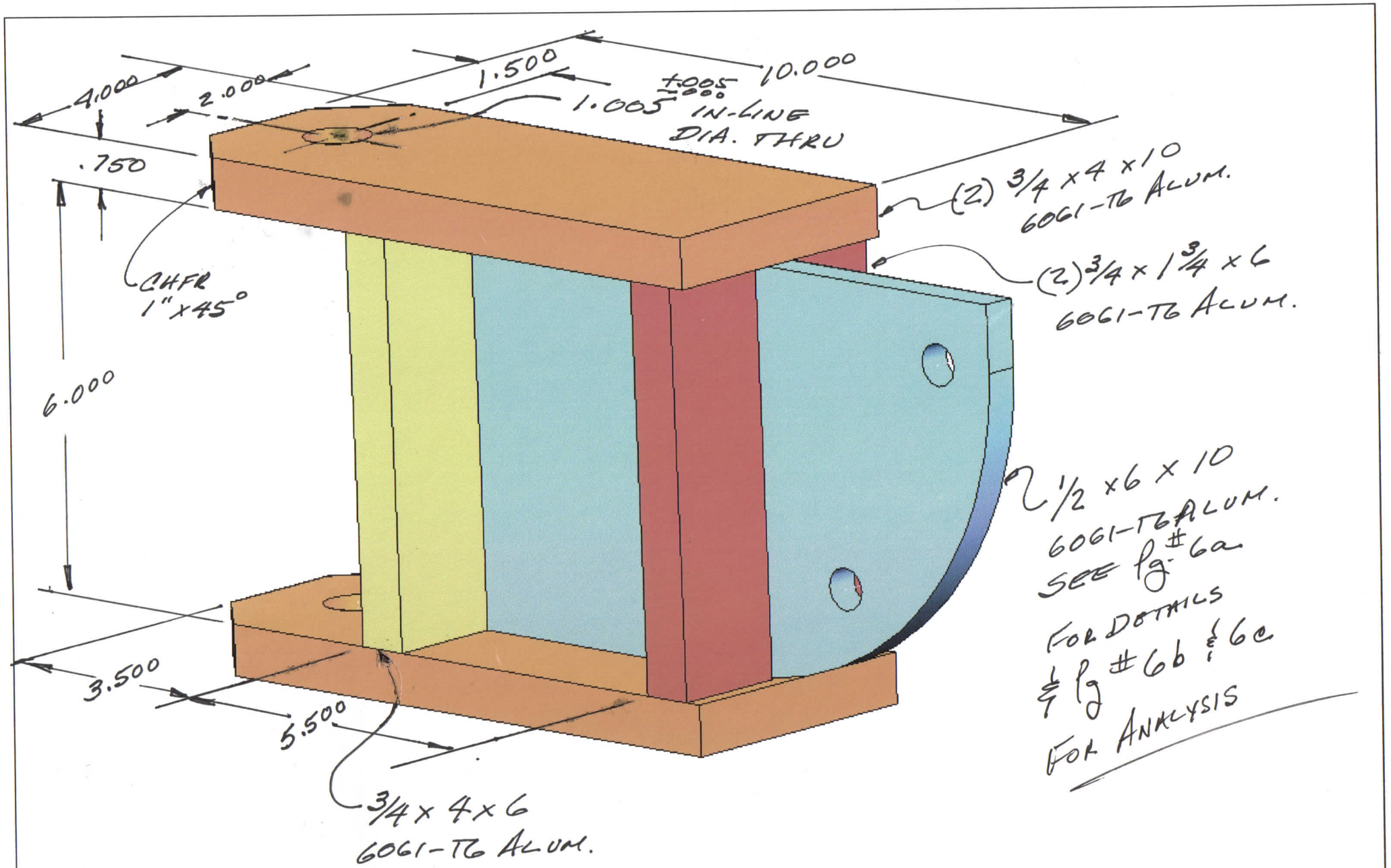

1/4 FILLET WELD
SEE Pg # 1a FOR WELD SIZING

BOOM UPPER SUPT

Pg #6

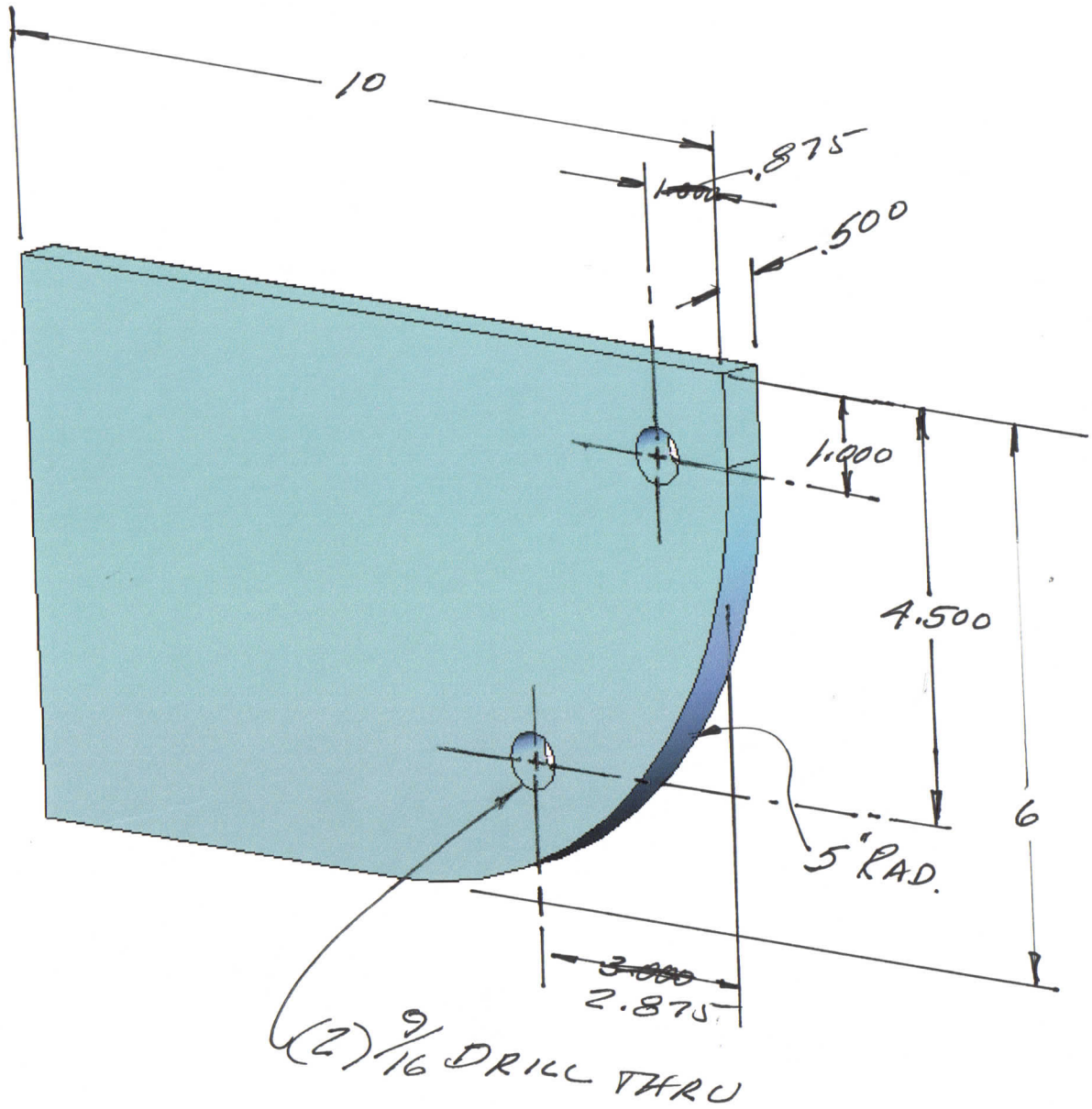

Pg #6a

I-DEAS 12 NX Series m1: I-DEAS Visualizer

Display 1
2430AND1260LB_LOAD
B.C. 1,STRESS_2,LOAD SET 1
C:\PPD_IDM_PPD90896\EMV_SCIBOONE_JIB_CRANE_01-18-07.mf1
STRESS Von Mises Averaged Top shell
Min: 8.77E+00 lbf/in^2 Max: 1.32E+04 lbf/in^2
B.C. 1,DISPLACEMENT_1,LOAD SET 1
C:\PPD_IDM_PPD90896\EMV_SCIBOONE_JIB_CRANE_01-18-07.mf1
DISPLACEMENT XYZ Magnitude
Min: 0.00E+00 in Max: 4.79E-03 in
Part Coordinate System

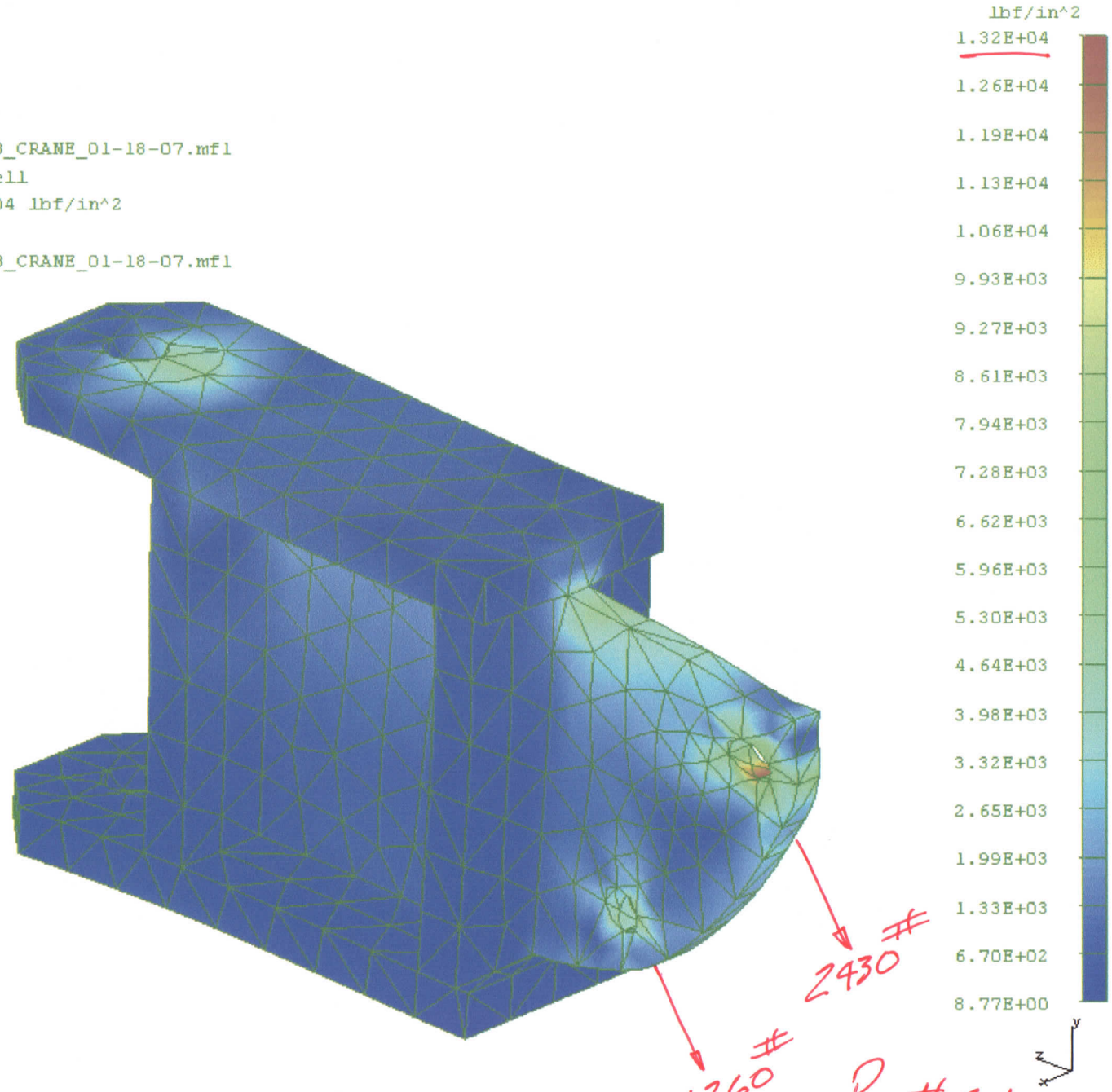

ALL ALUM CONSTRUCTION

Pg #6

I-DEAS 12 NX Series m1: I-DEAS Visualizer

Display 1
82AND4640LB_LOAD
B.C. 1,STRESS_2,LOAD SET 1
C:\PPD_IDM_PPD90896\EMV_SCIBOONE_JIB_CRANE_01-18-07.mf1
STRESS Von Mises Averaged Top shell
Min: 1.34E+01 lbf/in^2 Max: 2.45E+04 lbf/in^2
B.C. 1,DISPLACEMENT_1,LOAD SET 1
C:\PPD_IDM_PPD90896\EMV_SCIBOONE_JIB_CRANE_01-18-07.mf1
DISPLACEMENT XYZ Magnitude
Min: 0.00E+00 in Max: 5.03E-03 in
Part Coordinate System

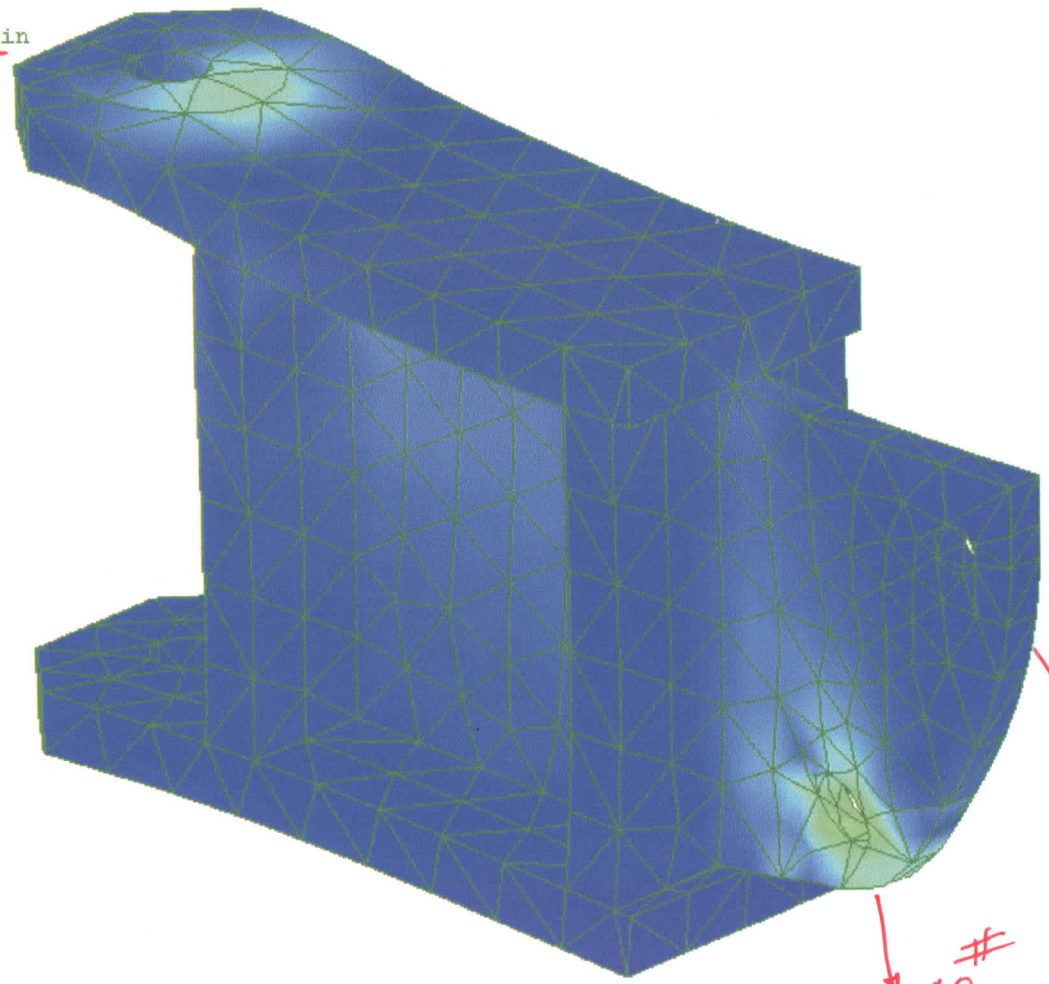

lbf/in^2
2.45E+04
2.33E+04
2.21E+04
2.08E+04
1.96E+04
1.84E+04
1.72E+04
1.59E+04
1.47E+04
1.35E+04
1.23E+04
1.10E+04
9.81E+03
8.59E+03
7.36E+03
6.14E+03
4.91E+03
3.69E+03
2.46E+03
1.24E+03
1.34E+01

82#

4640#

Pg #6

ALL ALUM CONSTRUCTION

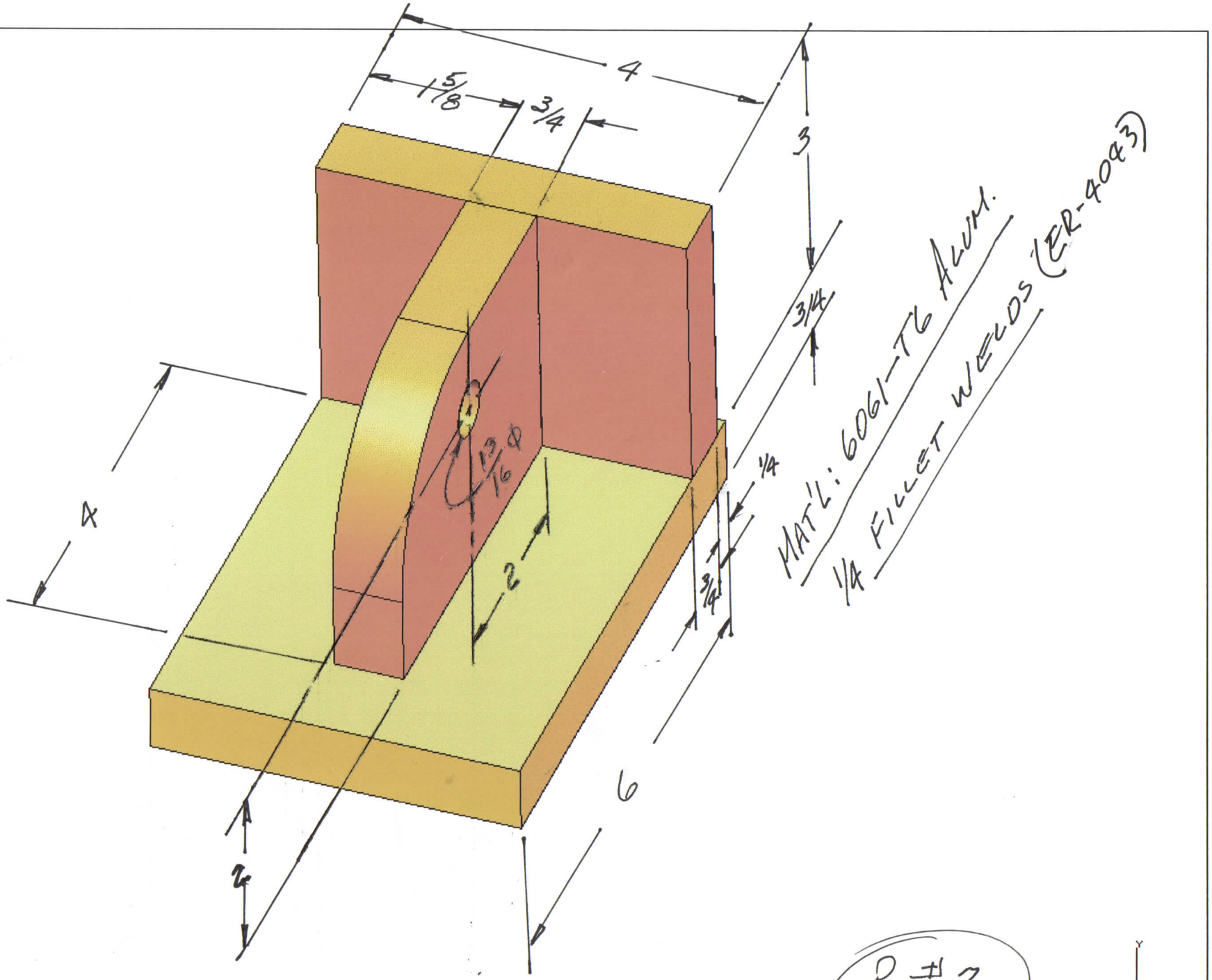
4
1 5/8
3/4
3
3/4
13/16 Ø
4
2
1/4
3/4
6
2
MAT'L: 6061-T6 ALUM.
1/4 FILLET WELDS (ER-4043)

Pg #7

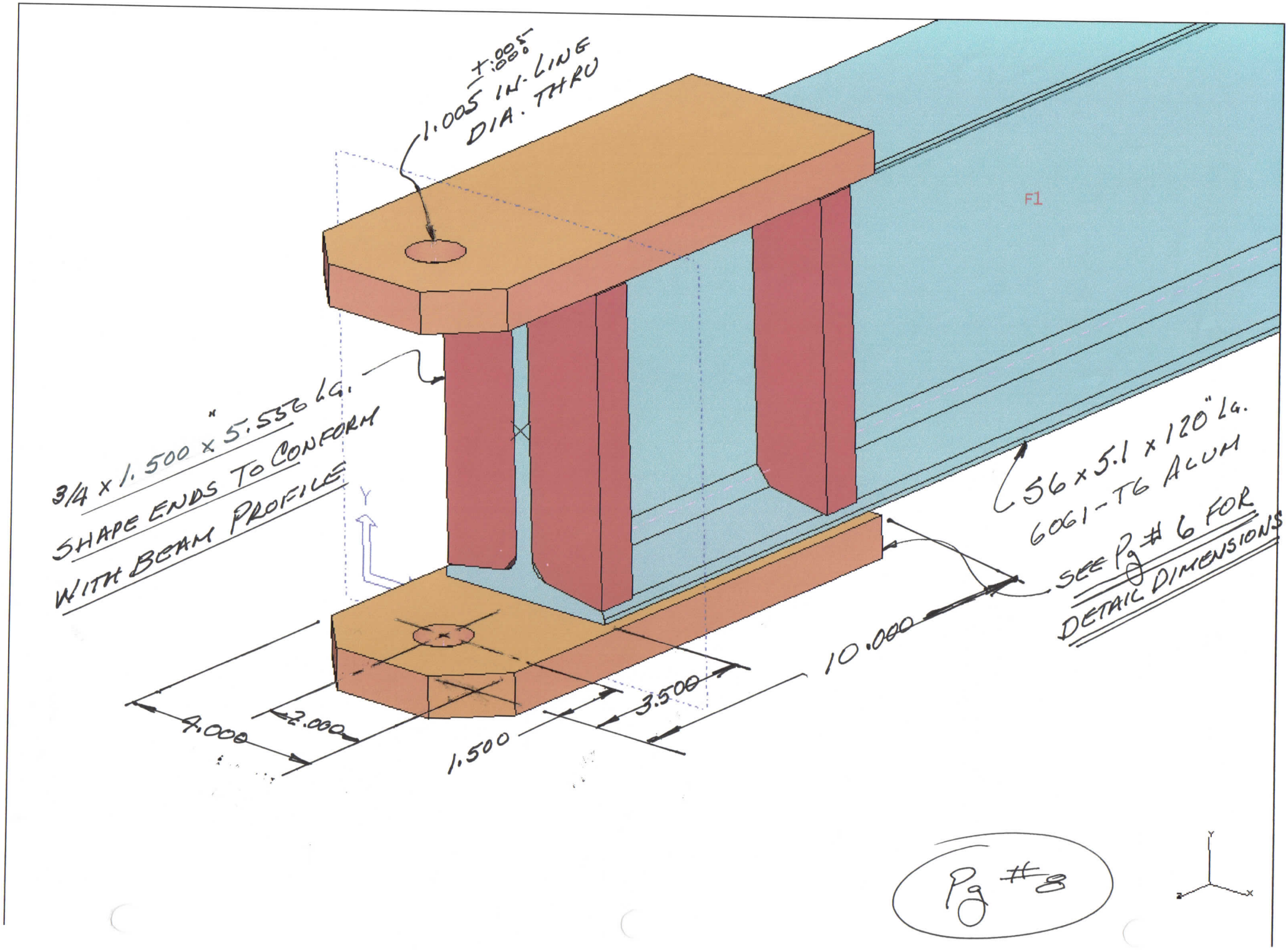
1.005 +.005 -.000 IN. LING DIA. THRU
3/4 x 1.500" x 5.556 LG.
SHAPE ENDS TO CONFORM WITH BEAM PROFILE
56 x 5.1 x 120" LG. 6061-T6 ALUM
SEE Pg # 6 FOR DETAIL DIMENSIONS
10.000
3.500
1.500
2.000
4.000
F1
Y
X
Pg #8

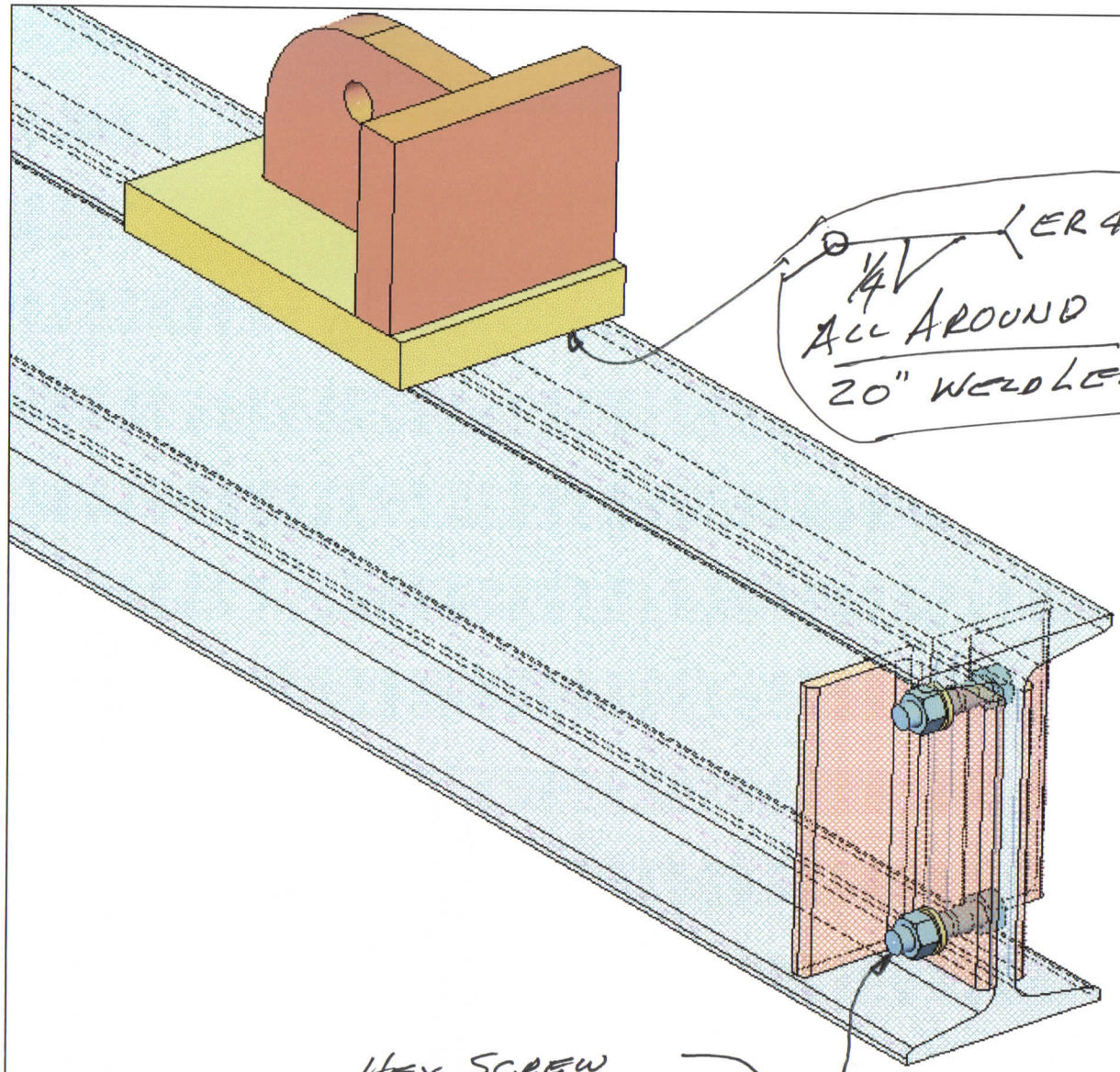

ALLOWABLE SHEAR STRESS FOR 1/4 FILLET WELD IS 4.4×10^3 psi. (ER 4043)

THE LOAD CARRYING CAPACITY FOR THIS CONNECTION IS:

$W = 20 \times \sin 45^\circ \times .25 \times 4.4 \times 10^3$

$= 15{,}560^{\#}$

ER 4043

1/4

ALL AROUND

20" WELD LENGTH

ANGLE 1/4 x 2 x 2

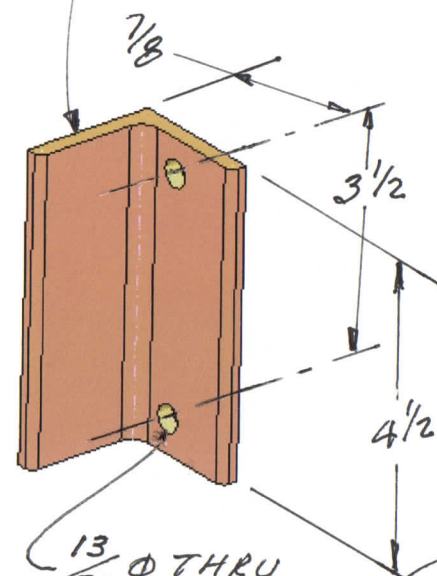

HEX SCREW 3/8-16 x 1 1/2

HEX NUT 3/8-16

LOCK WASHER 3/8 ϕ

13/32 ϕ THRU 1/2" FROM ENDS

I-DEAS 12 NX Series m1: I-DEAS Visualizer

Display 1
1300LB_BETWEEN_PIVOT_AND_SUPT
B.C. 1,STRESS_3,LOAD SET 1
C:\PPD_IDM_PPD90896\EMV_SCIBOONE_JIB_CRANE_01-18-07.mf1
STRESS Von Mises Averaged Top shell
Beam stress: Von Mises , maximum point
Min: 1.17E-13 lbf/in^2 Max: 4.81E+03 lbf/in^2
B.C. 1,DISPLACEMENT_1,LOAD SET 1
C:\PPD_IDM_PPD90896\EMV_SCIBOONE_JIB_CRANE_01-18-07.mf1
DISPLACEMENT XYZ Magnitude
Min: 0.00E+00 in Max: 6.89E-02 in
Part Coordinate System

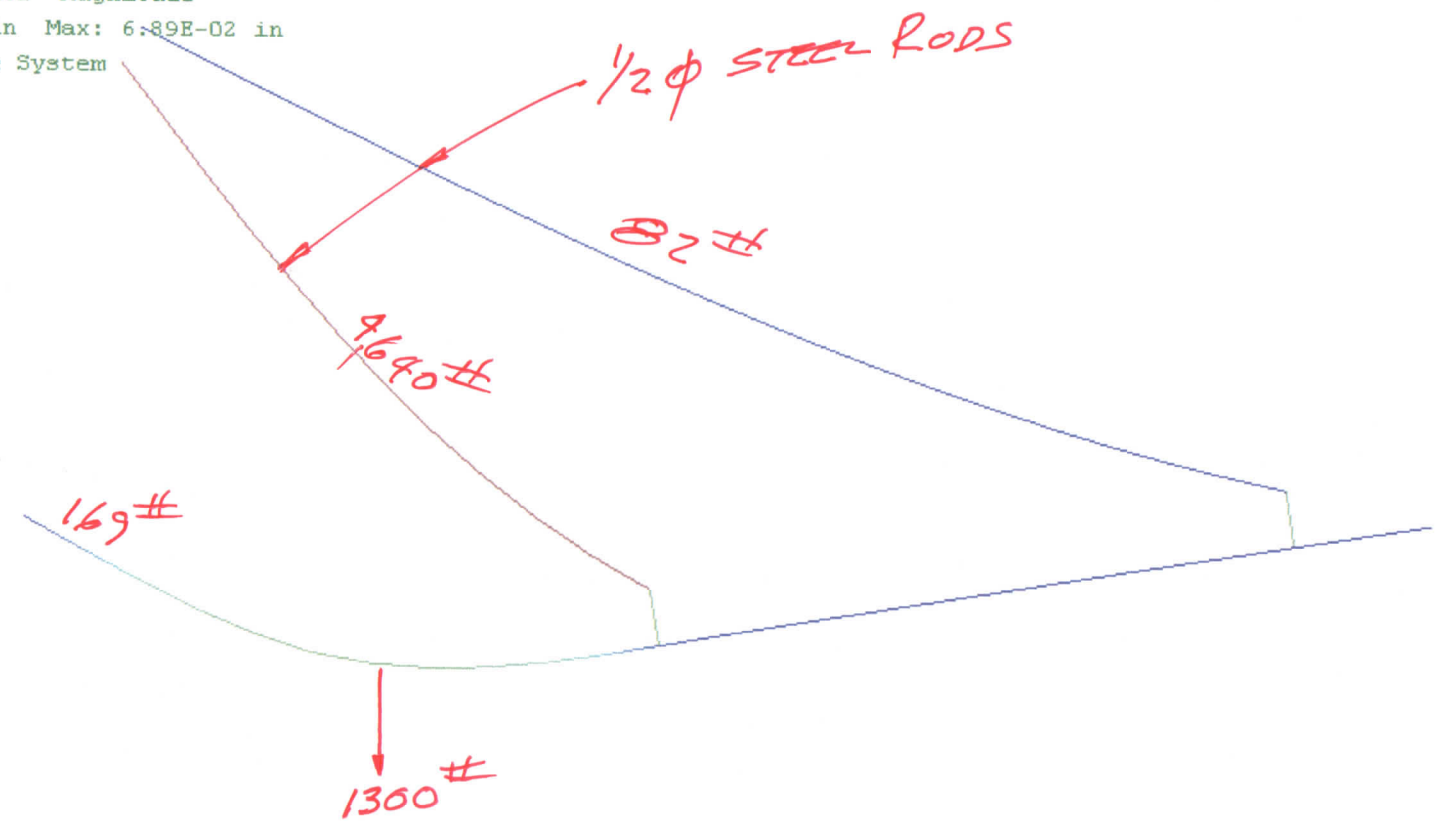

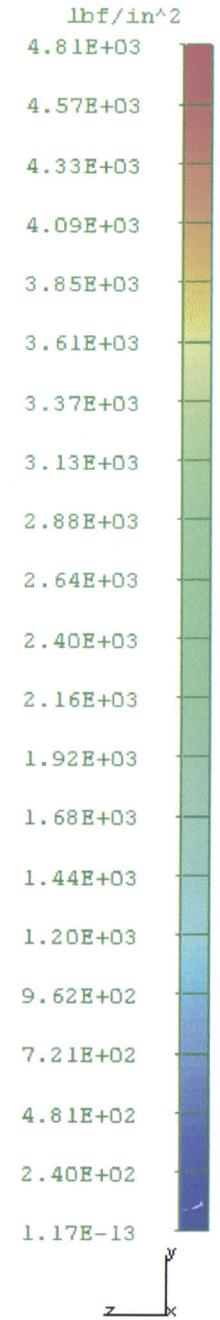

Fig #10

I-DEAS 12 NX Series m1: I-DEAS Visualizer

Display 1
1300LB_BETWEEN_SUPTS
B.C. 1,STRESS_3,LOAD SET 1
C:\PPD_IDM_PPD90896\EMV_SCIBOONE_JIB_CRANE_01-18-07.mf1
STRESS Von Mises Averaged Top shell
Beam stress: Von Mises , maximum point
Min: 5.35E-15 lbf/in^2 Max: 9.09E+03 lbf/in^2
B.C. 1,DISPLACEMENT_1,LOAD SET 1
C:\PPD_IDM_PPD90896\EMV_SCIBOONE_JIB_CRANE_01-18-07.mf1
DISPLACEMENT XYZ Magnitude
Min: 0.00E+00 in Max: 1.71E-01 in
Part Coordinate System

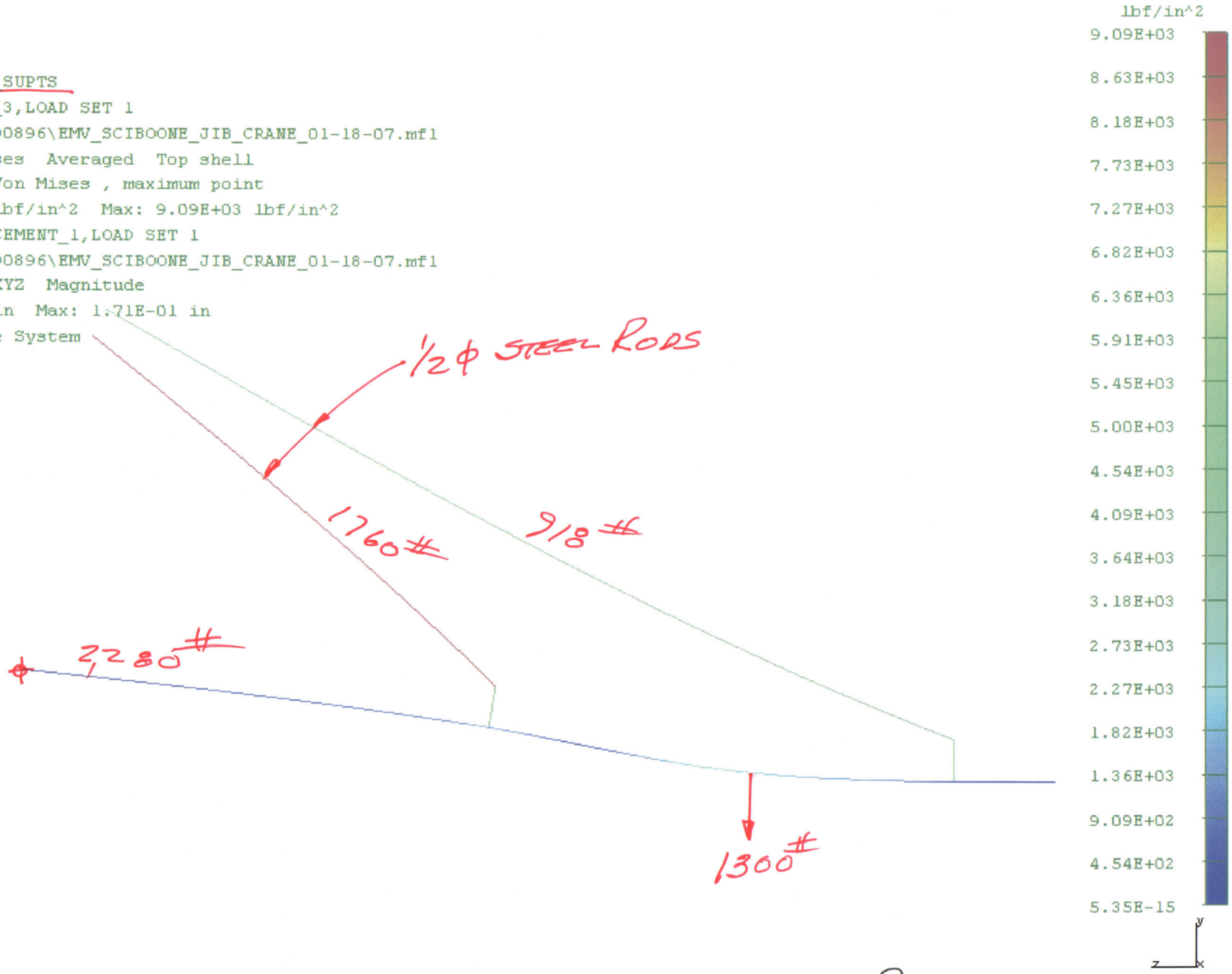

Pg #11

I-DEAS 12 NX Series m1: I-DEAS Visualizer

Display 1
1300LB_LOAD_AT_END
B.C. 1,STRESS_3,LOAD SET 1
C:\PPD_IDM_PPD90896\EMV_SCIBOONE_JIB_CRANE_01-18-07.mf1
STRESS Von Mises Averaged Top shell
Beam stress: Von Mises , maximum point
Min: 5.19E-13 lbf/in^2 Max: 1.26E+04 lbf/in^2
B.C. 1,DISPLACEMENT_1,LOAD SET 1
C:\PPD_IDM_PPD90896\EMV_SCIBOONE_JIB_CRANE_01-18-07.mf1
DISPLACEMENT XYZ Magnitude
Min: 0.00E+00 in Max: 4.38E-01 in
Part Coordinate System

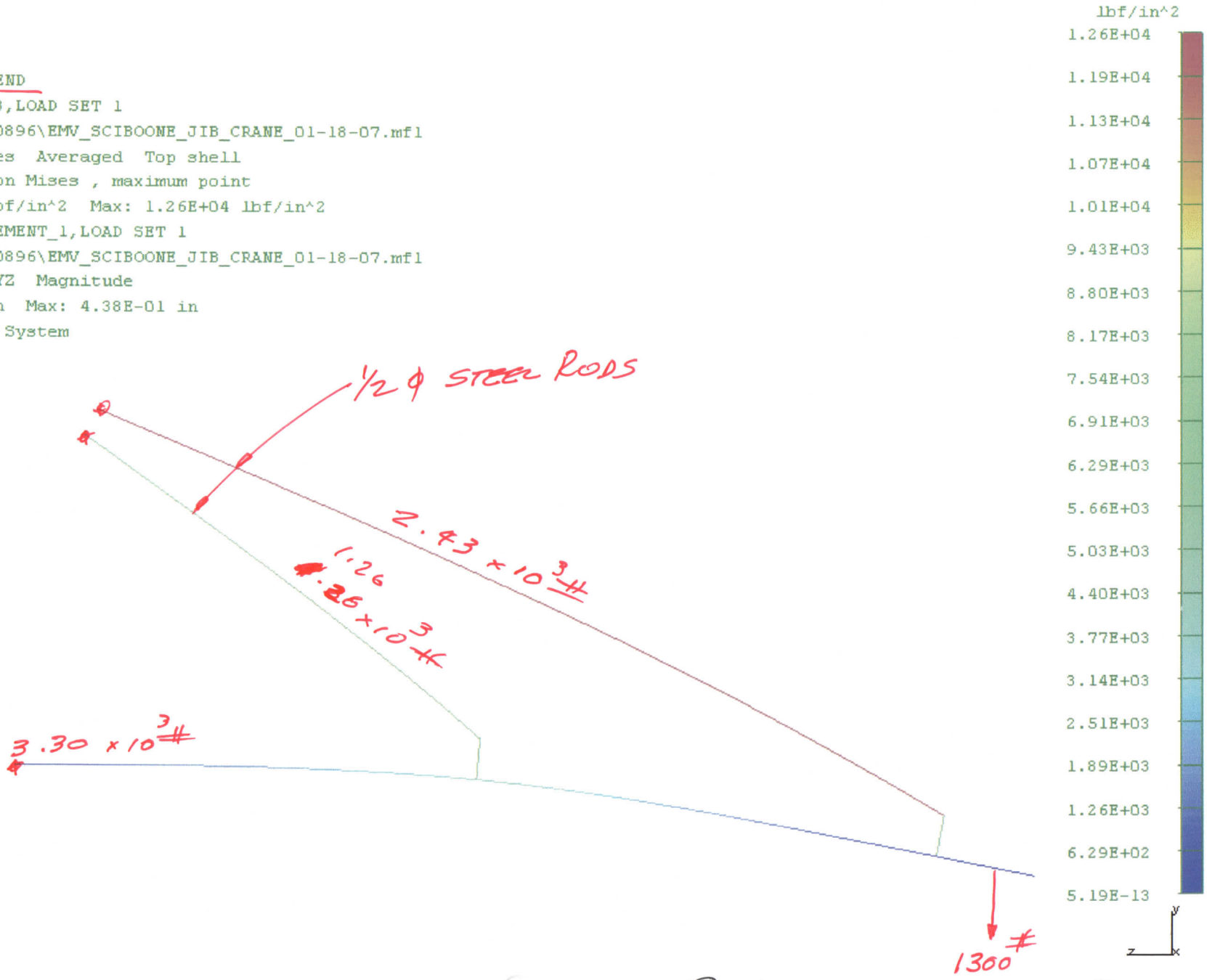

Pg # 12

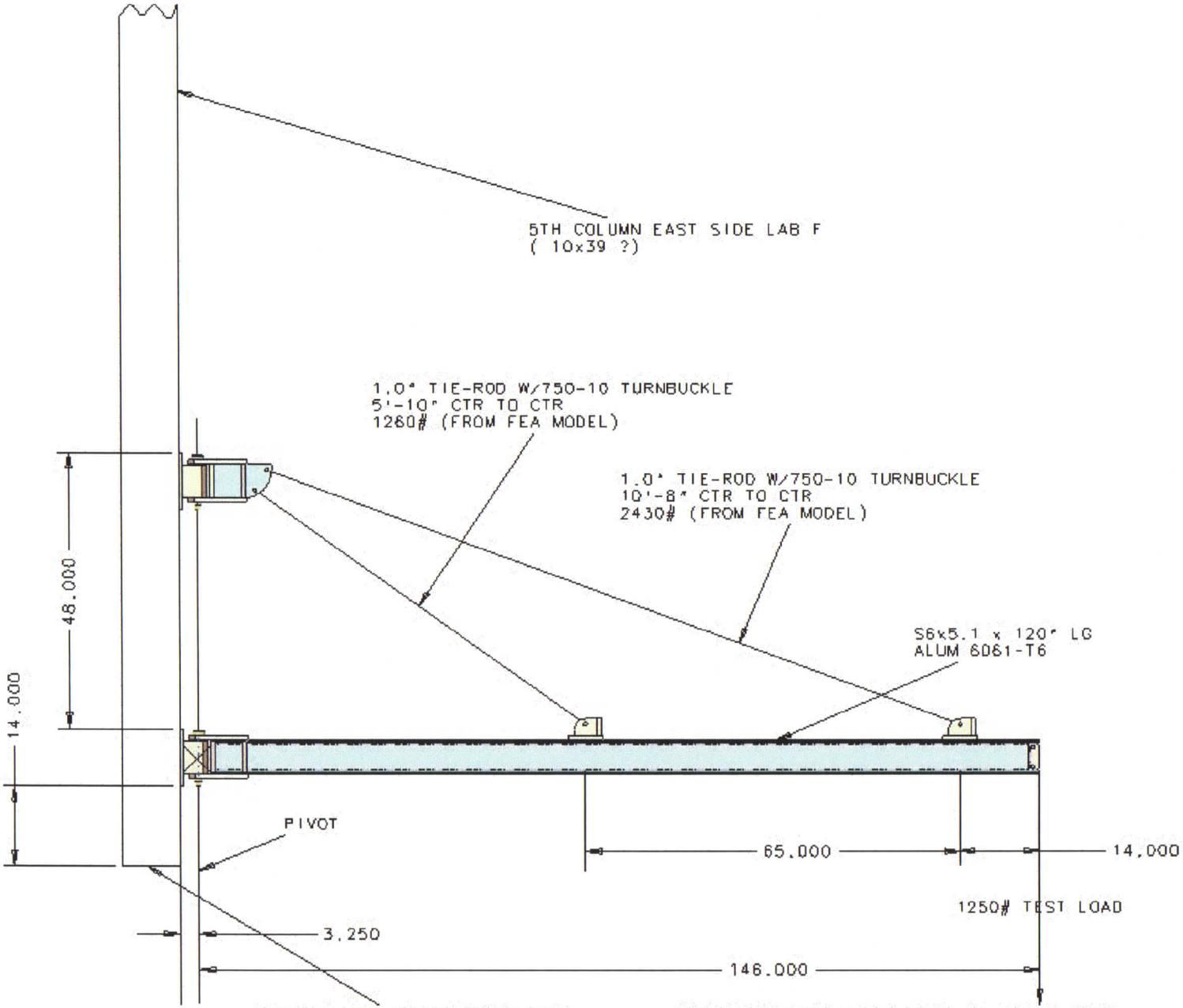

JIB BOOM TEST CONDUCTED AT LAB F AND WITNESS BY KOURASH TAHERA, JOHN VOIRIN AND ERNIE VILLEGAS. THE TEST LOAD WAS SUSPENDED AS SHOWN AND HELD FOR A FIVE MINUTE INTERVAL.

The Hilti Drop-In Anchor

ADDENDUM A

Product Details

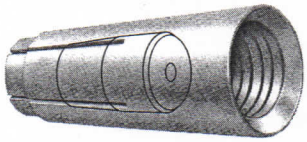

Advantages:

Shallow embedment depth

Internal thread

Anchor is flush with base material

Internal plug

Material

Anchor material is SAE 1110M for the 1/4", 3/8" and 1/2" HDI's.

Anchor material is AISI 12L14 steel, meeting ASTM specification A 108 for 5/8" & 3/4" HDI's.

Anchor material is AISI 303 for stainless steel anchors.

Plated with dull zinc finish for corrosion protection in accordance with ASTM B633, Sc. 1, Type III.

Specification Table

Details		Anchor Size				
D	bolt size	1/4"	3/8"	1/2"	5/8"	3/4"
BD	bit diameter	3/8"	1/2"	5/8"	27/32"	1"
E L HD	rec. min. depth of embedment anchor length hole depth	1"	1 9/16"	2"	2 9/16"	3 3/16"
TL	length of thread/ thread per in.	7/16" 20	5/8" 16	11/16" 13	7/8" 11	1 3/8" 10
BMT	base material thickness (in)	3	3 1/8	4	5 1/8	6 3/8
M	tightening torque (max) (ft lbs)	4	11	22	37	80
AS	Spacing required to obtain maximum working load (inches)	3 1/2	5 1/2	7	8 7/8	11 1/8
AS_{min}	Minimum allowable spacing between anchors (inches) (Refer to Note #1)	2	3 1/8	4	5	6 3/8
ED	Edge distance required to obtain maximum working load (inches)	3	4 3/4	6	7 5/8	9 5/8
ED_{min}	Minimum allowable edge distance (inches)	3	4 3/4	6	7 5/8	9 5/8

NOTE: 1) When using AS_{min} reduce load by 50%.

Anchor Spacing and Edge Distance Guidelines

The HDI Anchor Spacings and Edge Distances were calculated using the following information:

	Anchor Spacing			Edge Distance Shear Load Only			Edge Distance Tensile Load Only		
	AS	AS_{min}	f_{AS}	ED	ED_{min}	f_{ED}	ED	ED_{min}	f_{ED}
HDI	3.5E	2.0E	0.5	3.0E min	3.0E min	1.00	3.0E	3.0E	1.00

ADDENDUM B

Hilti Drop-In Anchor continued

Load Information

HDI — Allowable Working Loads (lbs)

Anchor Size	2000 PSI Concrete		4000 PSI Concrete		6000 PSI Concrete	
	Tension	Shear	Tension	Shear	Tension	Shear
1/4"	480	430	560	450	770	760
3/8"	790	990	1240	1060	1410	1480
1/2"	1000	1470	1690	1560	2550	2340
5/8"	1390	2220	2420	3050	2600	3400
3/4"	2210	3800	4010	4400	4100	5300

Note: The allowable shear values are based on the use of SAE Grade 5 bolts.

Stainless Steel HDI — Allowable Working Loads (lbs)

Anchor Size	4000 PSI Concrete		6000 PSI Concrete	
	Tension	Shear	Tension	Shear
1/4"	480	600	740	600
3/8"	1040	1230	1460	1230
1/2"	1840	2760	2410	2760
5/8"	2630	4510	3770	4510
3/4"	3830	5580	5030	5580

Note: The allowable shear values are based on the use of Type 18-8 bolts.

HDI — Allowable Working Load (lbs)

Anchor Size	Anchor Installed in 3000 PSI Lt. Wt. Concrete[1]		Anchor Installed Through Steel Decking into 3000 PSI Lt. Wt. Concrete[2]	
	Tension	Shear[3]	Tension	Shear[3]
HDI 1/4	465	340	530	335
HDI 3/8	755	940	880	1010
HDI 1/2	1135	1700	1105	1755
HDI 5/8	1465	2835	—	—
HDI 3/4	2075	3680	—	—

1. The tabulated shear and tensile values are for anchors installed in structural lightweight concrete having the designated ultimate compressive strength at the time of installation. The concrete must comply with ASTM C 330-77.
2. The tabulated shear and tensile values are for anchors installed through 20 gauge intermediate decking into structural lightweight concrete having the designated ultimate strength at the time of installation. The concrete must comply with ASTM C 330-77.
3. The allowable values are based on the use of SAE Grade 2 bolts installed in the anchors.

Suggested Specifications:

Expansion Anchors — Expansion anchors shall be flush or shell type which meet Federal Specification FF-S-325, Group VIII, Type 1, for expansion shield anchors. Anchors to be zinc plated in accordance with ASTM B633-78, Sc. 1, Type III. Anchors shall be Hilti HDI anchors as supplied by Hilti Fastening Systems, P.O. Box 21148, Tulsa, OK 74121.

Installation — Shell or flush type anchors to be installed in holes drilled with Hilti carbide tipped drill bits. Anchors shall be installed per manufacturer's recommendations.

Listings

UL listed, Control No. 767 G, "Pipe Hangers" (3/8"-3/4" diameter)

International Conference of Building Officials (ICBO): Evaluation Report No. 2895.

Southern Building Code Congress (SBCC): Report No. 8913.

Approvals

City of Los Angeles: Research Report No. 23709.

Factory Mutual: Serial No. 22765 "Sprinkler Hanger Components — Expansion Shields."

Conforms to Federal Specification FF-S-325, Group VIII, Type 1 for expansion shield anchors.