Fermilab

Particle Physics Division 5/29/2001

Mechanical Department Engineering Note

Number: MD-Eng/02-007 **Date:** March 13, 2002

Project: Minos Near Detector

Project Internal Reference:

Title: Design for work platform on detector

Author(s): J. Kilmer

Reviewer(s): Bob Wands

Key Words:

Abstract/Summary:

Provides calculations for the design of a walkway on the top of the Minos Near detector to access the connectors at the top of the planes.

Applicable Codes: **OSHA, walking and working surfaces**

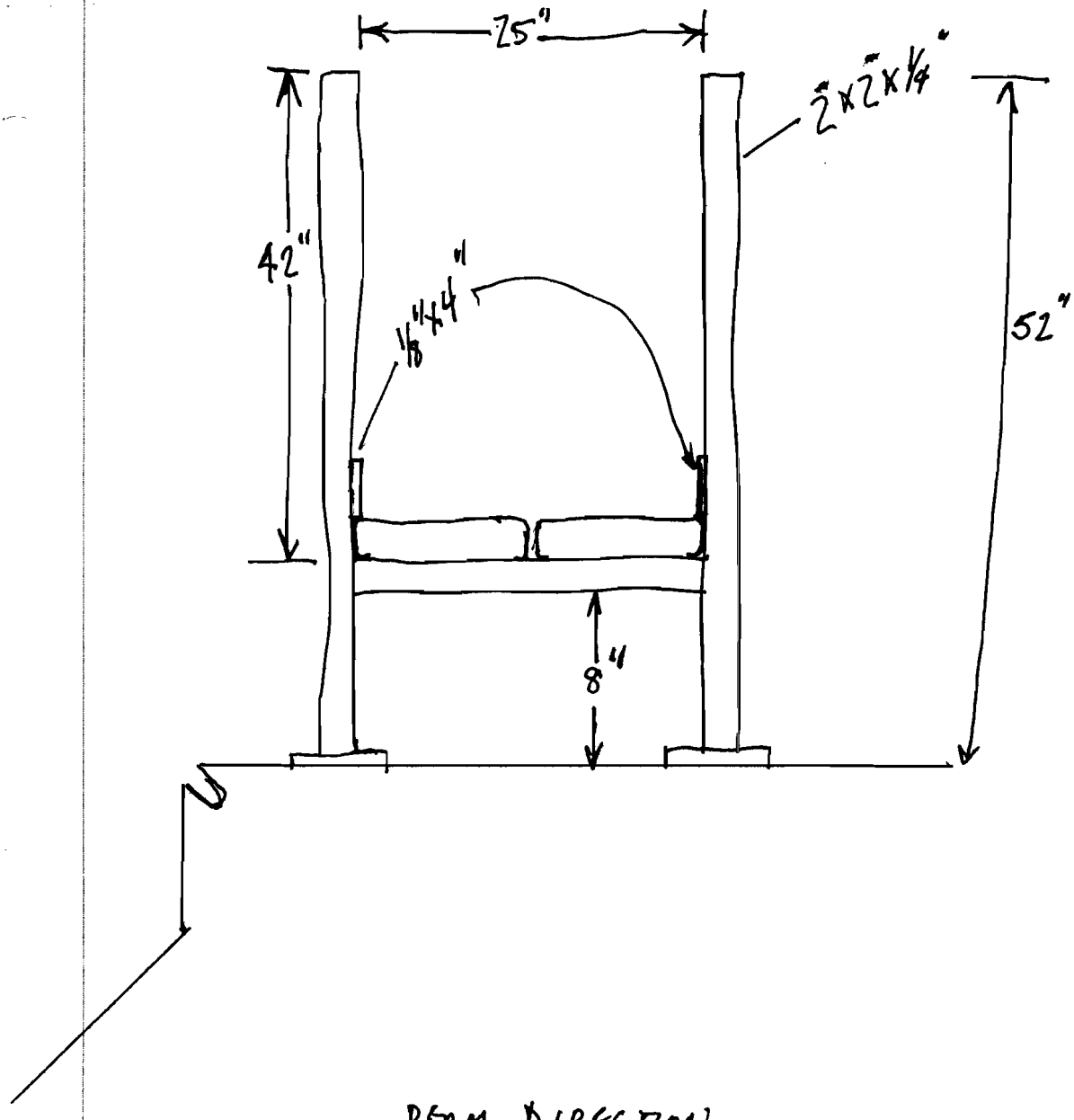

BEAM DIRECTION
INTO PAPER.

STUDES ON PLANE 1, 15 ... 14m+1 ... 28

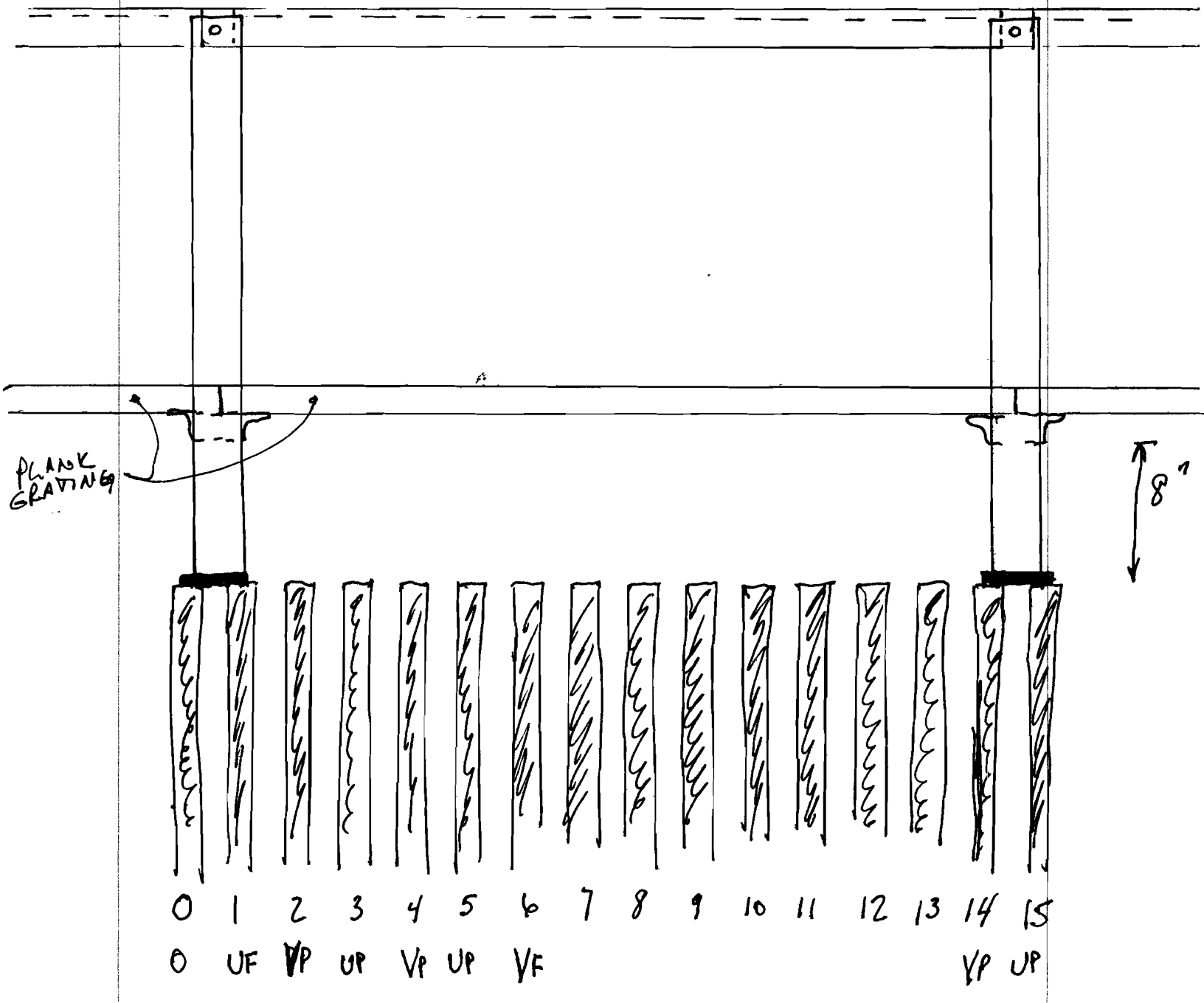
PLANK GRATING
8"
0 1 2 3 4 5 6 7 8 9 10 11 12 13 14 15
0 UF VP UP VP UP VF VP UP

2932

218-9121

14 PLANES X 2.33 in/PLANE = 32.62 in

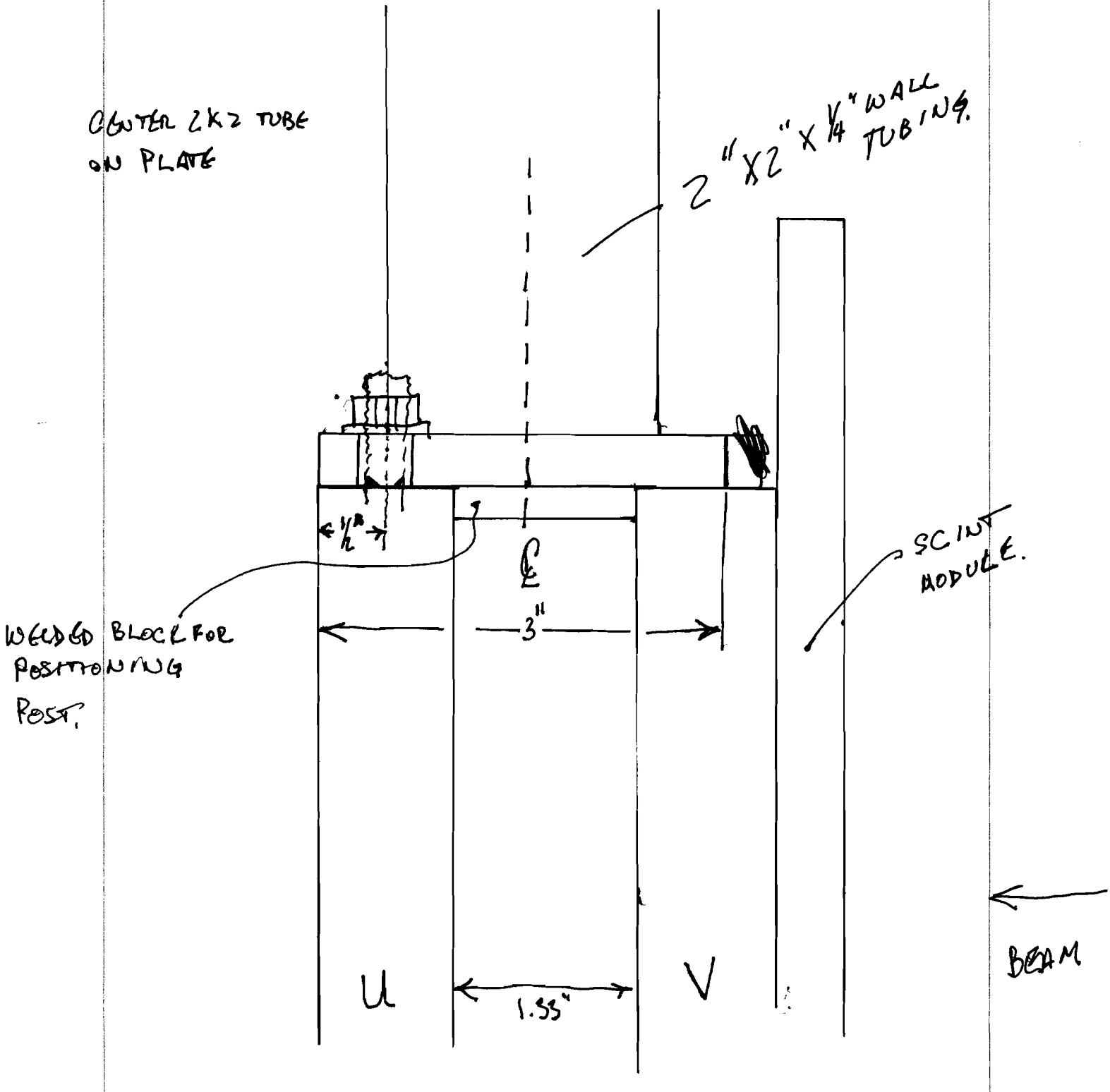

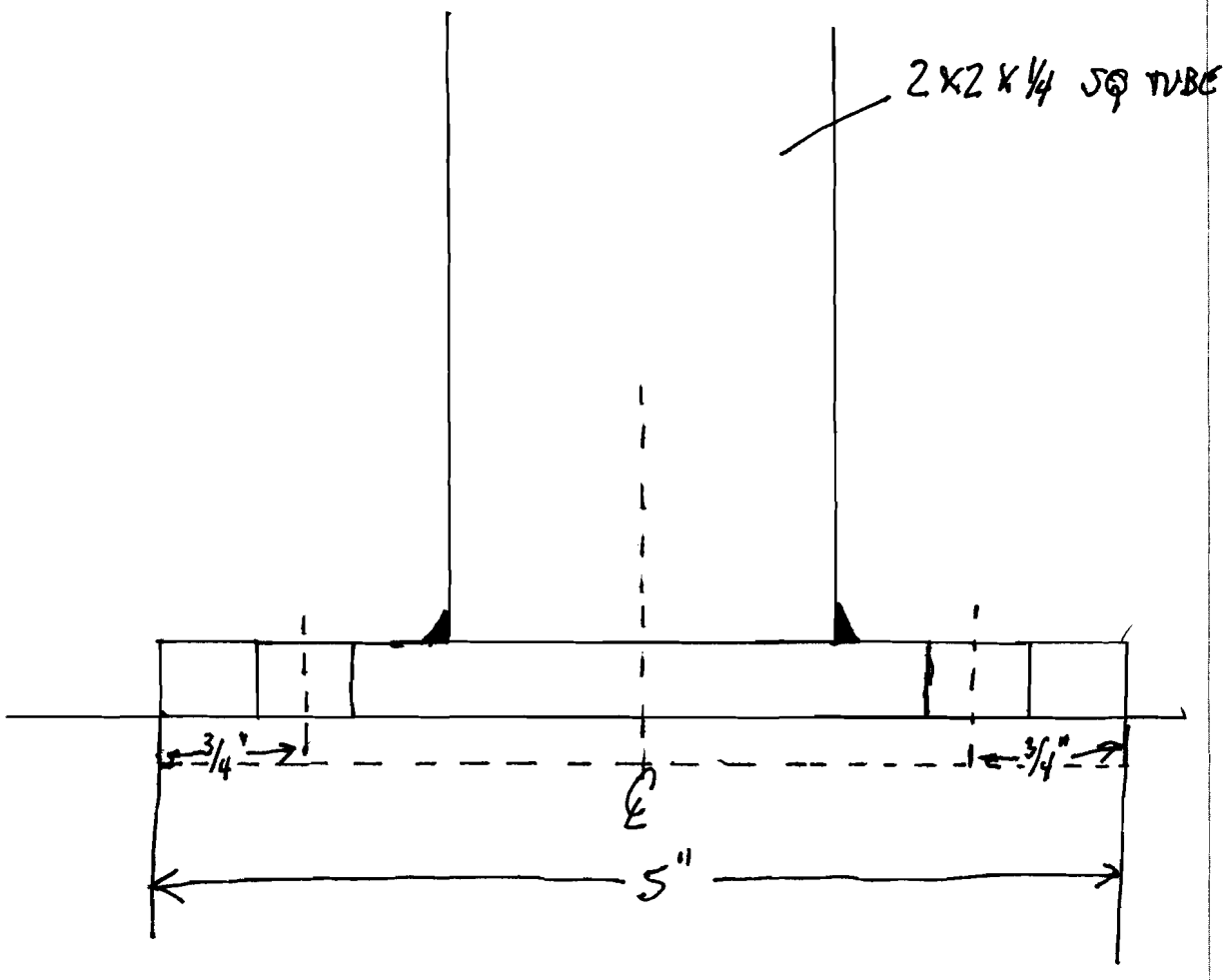

STEEL PLANE

LOOKING IN BEAM DIRECTION

RAILING PGS

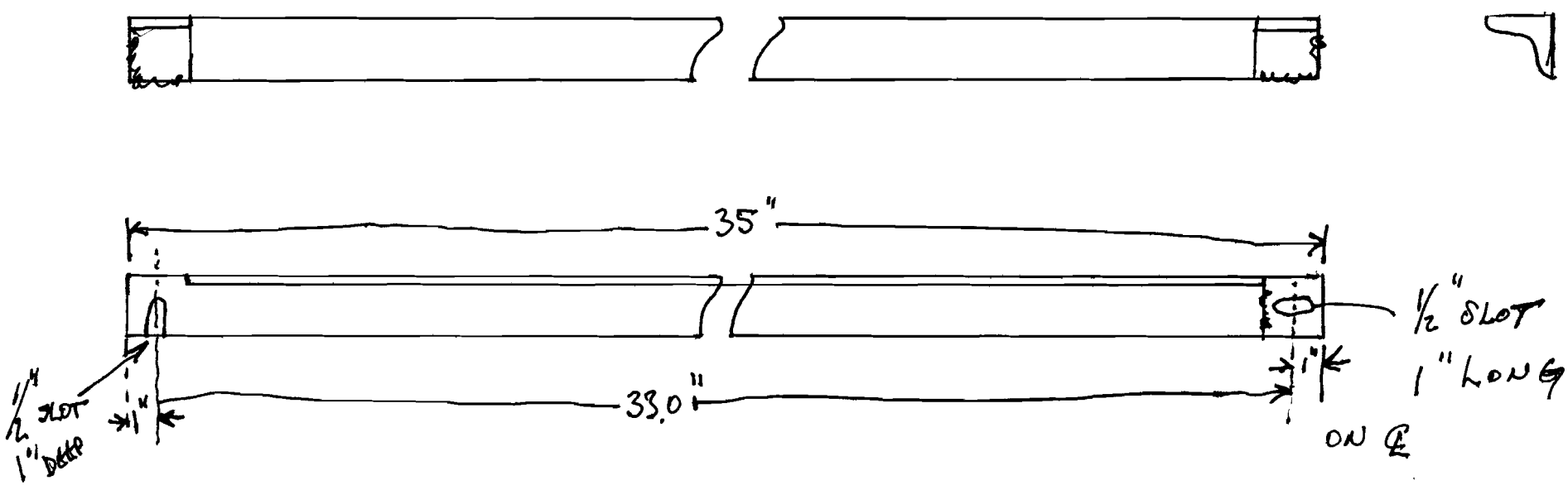

$14\,(1.020 + 1.337) = (2.357)\,14$

$= 32.998$

PUT 200lbs (OSHA REQUIREMENT) ON RAILING

$M = (200\text{lbs})(50\text{in})$
$= 10{,}000 \text{ in lbs}$

NOW ASSUME THAT ONE LEG IS TRYING TO ROCK UP.

THEN DISTANCE FROM FULCRUM TO BOLT IS

$L = 25 + 2 + 2 + 1$
$= 30\text{in}$

FIND TENSION ~~GEN~~FORCE ON OPPOSITE LEG BOLTS.

$(F)(30\text{in}) = 10{,}000 \text{ in lbs.}$

$F = 333 \text{ lbs}$

EACH LEG HAS 2 - 3/8"-16 STUDS

NELSON STUD WELDING CATALOGUE SHOWS 3/8"-16 STUDS GOOD FOR 3,875 lb AT YIELD

USE LOAD FOR $\frac{1}{3}F_y = \frac{3875\text{lb}}{3} = 1292 \text{ lbs}$

$333 \text{ lbs} < 1292 \text{ lbs} \Rightarrow$ STUDS ARE ADEQUATE.

NOW LOOK AT BOLTS ON RAILING.

USE 3/8"-16 BOLTS

THEN 200lb LOAD ON RAILING IS 100lbs/BOLT $\Rightarrow$ OK

$\sigma = \frac{\text{LOAD ON BOLT}}{\text{AREA}}$

BENDING OF RAILING POSTS

ASSUME ALL 200lb IS ON ONE POST

BENDING $M = (200 lbs)(42 in)$

$= 8400$ in lbs

STRESS IN BENDING - CASE 22 pg 2-303 OF AISC CODE

$$\sigma = \frac{M}{S} = \frac{8400 \text{ in lbs}}{.766 \text{ in}^3} \leftarrow \text{FOR } 2''\times 2'' \times 1/4''$$

$$= 10{,}966 \text{ PSI}$$

F_y FOR A500 STRUCTURAL TUBING = 46 KSI

$$\frac{F_y}{3} = \frac{46{,}000 \text{ PSI}}{3} = 15333 \text{ PSI}$$

10,966 PSI < 15,333 PSI SO $2''\times 2''\times 1/4''$ STRUCTURAL TUBING IS OK FOR POSTS.

LOOK AT POST IN COMPRESSION

ASSUME DECK IS GOOD FOR $100 lbs/ft^2$.

TOTAL LOAD ON 2 POSTS IS

LENGTH OF POST IS 8" SO NO ELASTIC PROBLEMS.

$$\frac{32.99'' \times 24''}{144 in^2/ft^2} = 5.5 ft^2$$

$$\text{LOAD/POST} = \frac{(5.5 ft^2)(100 lb/ft^2)}{2 \text{ POSTS}} = 275 lb/\text{POST}$$

$$\text{COMPRESSIVE STRESS} = \frac{275 lb/\text{POST}}{1.59 in^2} = 173 \text{ PSI}$$

$\Rightarrow 2''\times 2''\times 1/4''$ TUBING IS OK

WELD OF CROSS SUPPORT TO POSTS — ASSUME ONLY SIDES ARE WELDED

SHEAR FORCE IS $\sim \frac{550\,lb}{2} = 275\,lb/POST$

WELD IS 1/4" FILLET WELD 2" LONG EACH SIDE.

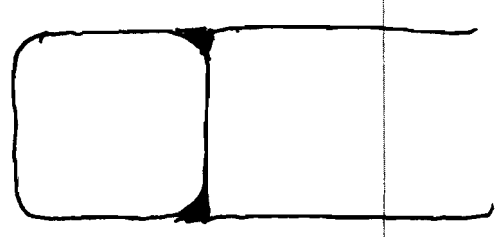

$t_w = \frac{.125\,in}{\sqrt{2}} = .176\,in$

$A = t_w \cdot l = (.176\,in)(2\,in) = .353\,in^2$

$\sigma_{SHEAR} = \frac{275\,lbs}{.353\,in^2} = 777.7\,PSI$

SHEAR STRESS IS OK. CAN USE E60 OR E70 ROD

FOR DECKING USE ALUMINUM PLANK GRATING 11 3/4" WIDE

GOOD FOR 310 lbs IN 4' OR SEE ATTACHED DATA SHEETS

$\sim \frac{310\,lbs}{4' \times 1'} \approx 75\,lbs/ft^2$ UNIFORM LOAD ON DECK.

We'd love to hear your comments about these products.

View printer-friendly PDF page.

Stair Treads & Plank Grating

Fiberglass (FRP) Stair Treads

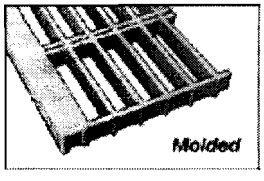

Lightweight, fiberglass reinforced plastic (FRP) treads are strong, nonconductive, and offer excellent corrosion resistance. They have a high traction, grit impregnated nose plate. Treads are OSHA compliant. For indoor and outdoor use.

Molded Stair Tread— Has cutting channels every 6" that let you trim the treads for a custom fit. Use a resin sealer (sold separately) to protect cut ends. Tread has 1 1/2" x 6" openings to keep liquids and debris from accumulating. Color is green.

I-Bar Stair Treads— Have a stiffer and lower profile than molded stair treads. Treads are yellow with a dark gray, double I-bar nose.

Resin Seal
Protects cut enc
absorbing wate
chemicals and f
Furnished in a 1
6253T97 **Each**

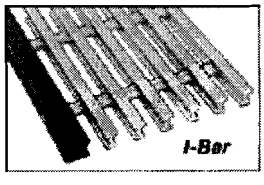

Bearing Bar Ht.	Material Thick.	Stair Dp.	24" Length	Each	30" Length	Each	36" Leng
Molded Stair Treads							
1 1/2"	1/4"	10 1/2"	69845T65	$82.50	69845T66	$103.13	69845T67
I-Bar Stair Treads							
1"	1/8"*	10 1/2"	6128T51	48.50	6128T52	60.75	6128T53
1 1/2"	1/8"*	10 1/2"	6128T55	53.00	6128T56	66.25	6128T57

*Measured at the thinnest part of the I-bar web.

About Plank Grating

Plank grating is often used for platforms, stair treads, work stands, decks, and ramps. Although it has a lower overall load rating than bar grating, it's more economical and easier to cut to size. Plank grating is lightweight and has drainage openings to help prevent build-up of debris. For plank grating fasteners, see page 1887.

The *uniform load rating* is the maximum evenly di load that the grating can support per square foot for a unsupported span. In general, as the width of the pla increases, the uniform load rating decreases. Lengths may vary as much as 1".

Serrated Diamond Anti-Skid Plank Grating

Grating has an abrasive, slip resistant surface. We offer grating made of corrosion resista galvanized steel, rustproof aluminum, and Type 304 stainless steel. Galvanized steel is tested meets Fed. Spec. RR-G-1602. Standard lengths are 10 and 12 ft. **Also Available:** 2-ft., 3-f 5-ft., 6-ft., and 8-ft. lengths at higher prices due to cutting costs.

To Order: Please specify length.

Additional Information: Click here for more information, including load ratings and deflec

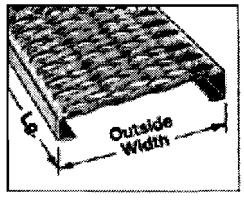

Channel Height	Ga.	4 3/4" Width Uniform Load Rating, 4-ft. Span	Per Ft.	7" Width Uniform Load Rating, 4-ft. Span	Per Ft.	9 1/2" Widt Uniform Load Rating, 4-ft. Span	
Galvanized Steel							
1 1/2"	14	334 lbs.	6855T14 $4.77	227 lbs.	6855T15 $5.27	168 lbs.	6855T
1 1/2"	12	443 lbs.	6855T31 5.75	301 lbs.	6855T32 6.78	229 lbs.	6855T
2"	14	553 lbs.	6855T19 5.13	376 lbs.	6855T21 5.61	278 lbs.	6855T
2"	12	703 lbs.	6855T36 6.23	478 lbs.	6855T37 7.19	353 lbs.	6855T
3"	12	——	—— ——	900 lbs.	6855T48 8.22	664 lbs.	6855T
Aluminum							
2"	10	474 lbs.	6246T41 13.03	395 lbs.	6246T22 15.18	339 lbs.	6246T
Type 304 Stainless Steel							
2"	16	343 lbs.	6247T43 18.83	252 lbs.	6247T34 20.54	186 lbs.	6247T
Galvanized Steel							

		11 3/4" Width		18 3/4" Width		24" Width	
1 1/2"	14	136 lbs.	6855T17 6.47	86 lbs.	6855T18 8.99	——	——
1 1/2"	12	181 lbs.	6855T34 8.55	115 lbs.	6855T3512.04	——	——
2"	14	225 lbs.	6855T23 6.80	142 lbs.	6855T24 9.24	128 lbs.	6855T
2"	12	286 lbs.	6855T41 8.94	181 lbs.	6855T4212.60	162 lbs.	6855T
3"	12	537 lbs.	6855T5110.00	337 lbs.	6855T5213.43	300 lbs.	6855T
Aluminum							
2"	10	310 lbs.	6246T2417.84	129 lbs.	6246T3524.23	——	——
Type 304 Stainless Steel							
2"	16	167 lbs.	6247T1223.02	——	—— ——	——	——

Open Surface Anti-Skid Plank Grating

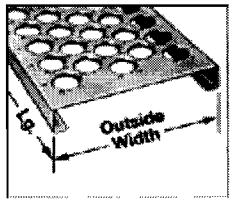

Raised projections provide excellent traction but are less abrasive than serrated grating, whil 1 3/8" dia. drainage holes prevent debris buildup and let light pass through. Grating is made of galvanized steel. Meets Fed. Spec. RR-G-1602.

To Order: Please specify 10- or 12-ft. length.

Additional Information: Click here for more information, including load ratings and deflection

		5" Width		7" Width		10" Width	
Channel Height	**Ga.**	**Uniform Load Rating, 4-ft. Span**	**Per Ft.**	**Uniform Load Rating, 4-ft. Span**	**Per Ft.**	**Uniform Load Rating, 4-ft. Span**	
1 1/2"	13	557 lbs.	64935T81$5.32	460 lbs.	64935T83$5.80	378 lbs.	64935T
2"	13	796 lbs.	64935T82 5.33	573 lbs.	64935T84 5.83	416 lbs.	64935T
		12" Width		18" Width			
1 1/2"	13	296 lbs.	64935T87 6.70	169 lbs.	64935T89 9.13	——	——
2"	13	346 lbs.	64935T88 6.76	180 lbs.	64935T91 9.19	——	——

Slotted Plank Grating

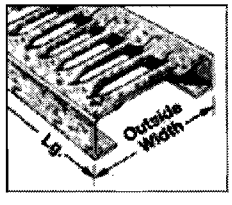

A smooth surface lets you slide heavy containers across this grating without splintering or damage. It can also be used as a storage shelf rack. Standard lengths are 10 and 12 ft.

Also Available: 2-ft., 3-ft., 4-ft., 5-ft., 6-ft., and 8-ft. lengths at higher prices due to cuttir

To Order: Please specify length.

Additional Information: Click here for more information, including load ratings and deflec

		5 7/8" Width		8 7/8" Width		11 7/8" Widt	
Channel Height	**Ga.**	**Uniform Load Rating, 4-ft. Span**	**Per Ft.**	**Uniform Load Rating, 4-ft. Span**	**Per Ft.**	**Uniform Load Rating, 4-ft. Span**	
1 5/8"	14	382 lbs.	6800T11$5.57	253 lbs.	6800T12$6.79	188 lbs.	6800T

NELSON® STUD WELDING
A FabriSteel Company

General Information for Stud Welding Studs

Standard Arc Welding Studs – Tensile and Torque Strengths

Mild Steel – 61,000psi Minimum Ultimate, 50,000 psi Minimum Yield

Thread Diameter	META[1] (sq. in.)	Yield Load (lbs.) at 50,000 psi	Ultimate Tensile Load (lbs) at 61,000 psi	Yield Torque[2] (ft-lbs) at 50,000 psi	Ultimate Torque (ft-lbs) at 61,000 psi	Shear Strength[3] (75% of Tensile Strength)
10-24 UNC	0.0174	870	1,061	2.7	3.3	796
10-32 UNF	0.0199	1,000	1,220	3.1	3.8	915
1/4-20 UNC	0.0317	1,590	1,940	6.6	8.1	1,455
1/4-28 UNF	0.0362	1,810	2,208	7.5	9.2	1,656
5/16-18 UNC	0.0522	2,620	3,196	13.6	16.6	2,397
5/16-24 UNF	0.0579	2,895	3,532	15.1	18.4	2,649
3/8-16 INC	0.0773	3,875	4,728	24.2	29.5	3,546
3/8-24 UNF	0.0876	4,380	5,344	27.4	33.4	4,008
7/16- 14 UNC	0.1060	5,315	6,484	38.7	47.2	4,863
7/16-20 UNF	0.1185	5,900	7,198	43.0	52.4	5,399
1/2-13 UNC	0.1416	7,095	8,656	59.1	72.1	6,492
1/2-20 UNF	0.1597	8,000	9,760	66.7	81.3	7,320
5/8-11 UNC	0.2256	11,300	13,786	117.7	143.6	10,340
5/8-18 UNF	0.2555	12,750	15,555	132.8	162.0	11,666
3/4-10 INC	0.3340	16,700	20,374	208.8	254.7	15,281
3/4-16 UNF	0.3724	18,600	22,692	232.5	283.7	17,019
7/8-9 UNC	0.4612	23,100	28,182	336.9	411.0	21,137
7/8-14 UNF	0.5088	25,450	31,049	371.1	452.8	23,287
1-8 UNC	0.6051	30,300	36,966	505.0	616.1	27,725
1-14 UNF	0.6791	33,900	41,358	565.0	689.3	31,019

* Torque figures based on assumption that excessive deformation of thread has not taken relationship between torque/tension out of its proportional range.

In actual practice, stud should not be used at its yield load. A factor of safety must be applied. It is generally recommended that studs not be used at more than 60% of yield strength, however, the factor of safety may vary up or down according to the particular application in which the studs are being used.

The user of these studs will make this determination

Formulae used to make the above calculations are as follows:

Ultimate Tensile	L = SA	Ultimate Torque	T = 0.2 x D x L
Yield	Z = YA	Yield Torque	T = 0.2 x D x Z

Where
D = Nominal Thread Diameter
S = Tensile Stress (psi)
L = Tensile Load (lbs)
A = Mean Effective Thread Area (META)
Y = Yield Stress (psi)
Z = Yield Load
T = Torque (in-lbs)

1 META is used instead of root area in calculating screw lengths because of closer correlation with actual tensile strength. META is based on mean diameter, which is the diameter of an imaginary co-axial cylinder whose surface would pass through the thread profile approximately midway between the minor and pitch diameters.

2 In actual practice, stud should not be used at its yield load. A factor of safety must be applied. It is generally recommended that studs not be used at more than 60% of yield strength, however, the factor of safety may vary up or down according to the particular application in which the studs are being used.

The user will make this safety factor determination

3 Shear values are based on Tensile Strength of the stud.