Fermilab

Particle Physics Division
Mechanical Department Engineering Note

Number: *MD-ENG-179* Date: *14 Mar 2009*

Project Internal Reference:

Project: *DES*

Title: *DES Production Imager Vessel Analysis*

Author(s): *Greg Derylo*

Reviewer(s): *Dave Pushka, 3-19-09*

Key Words: *DES imager vessel*

Abstract Summary:

The DES Imager V2 Vessel is a vacuum vessel, however does not meet the ASME Code requirements based on the small volume exception. Regardless, an analysis of the vessel is presented here.

Applicable Codes: *ASME Boiler and Pressure Vessel Code Section VIII*

1.0 INTRODUCTION

The DES imager is a vacuum vessel with a section of internal tubing that contains LN2. This report documents its use as a vacuum vessel and its overpressure protection in the event of a LN2 system failure. The DES production imager is shown in the following drawings.

436361	Vessel shell
436784	Back cover

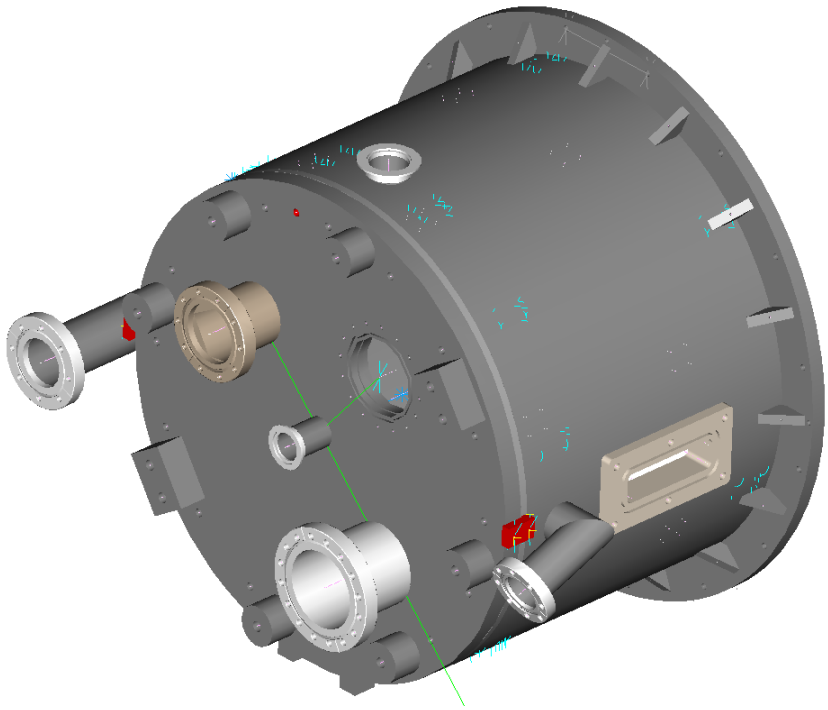

Two separate front covers are being developed: one for the production C5 optical lens and one for a flat optical window for testing use when the C5 lens is unavailable. These covers are being designed by Mr. Jim Bailey (jbailey@anl.gov) at the Argonne National Laboratory and are to be considered separately from this report.

The vessel volume is less than the 35 cubic foot threshold and therefore, as stated in FESHM 5033, the DES imager does not require a vacuum vessel engineering note.

Inner Diameter = (24” OD) – 2 * (3/8” wall thk) = 23.25”

Inside Length = 17.04”

Volume = (pi / 4) * $(23.25”)^2$ * (17.04”)
= 7,234 cubic inches
= 4.1 cubic feet.

Regardless, the vessel integrity will still be verified here in order to ensure its safe operation.

2.0 CONSIDERATION OF INTERNAL & EXTERNAL PRESSURIZATION

The sections below document the various elements of the design. The maximum allowable stress for SS 304 is 16.7 ksi per ASME 2004 II-D Table 1A between -20 and +100 °F (-29 to +38 °C).

2.1 Pressure Relief

In the event of an LN2 system failure, the relief system shall limit internal pressure to the following level by means of a vacuum relief plate:

Specified MAWP = 12 psig

In the event that the internal LN2 tubing (1" OD) ruptures and LN2 is spilled, a positive pressure relief valve is located on the vessel. The vessel analysis prepared for the DES imager test vessel (MD-ENG-099) documents the relief of the standard 2-5/8 inch Fermi Parallel Plate Relief mounted to the vessel (dwg # 1620-MB-106391) as follows:

> *The documented capacity of the relief is 704 scfm air @ 2psig. Given that the MAWP of the vessel is 12 psig, the flow rate thru the valve is 1645 SCFM air. This corresponds to a LN2 flow rate of 63 L/min.*

In its lifetime, the vessel will be operated in three different locations:

- FNAL Lab A
- CTIO Blanco Telescope cleanroom (Coudee room)
- CTIO Blanco Telescope Structure

The pump curve for the LN2 pump used for all these applications is shown in the following page and indicates a maximum flow of about 3.5 gpm (13 lpm). The delivery rate is therefore much less than the relief capacity.

It should also be noted that the imager optical window would lift off its o-ring face seal in the event of significant internal pressurization, providing additional relief. However, no credit is taken here for that additional relief.

The relief capacity is therefore adequate to prevent vessel pressurization above the MAWP.

3 OPERATION

3.1 PUMP DESIGN POINT OPERATING CONDITIONS

The pump design point operating conditions are:

Fluid	LN2
Inlet pressure	14.7 psia
Inlet temperature	-321°F
Flow rate	2.0 gpm
Differential pressure	35.0 psid
Approx. operating speed	5192 rpm

Figure 3-1shows the head-flow curve for the LNG pump at an operating speed of 5192 rpm.

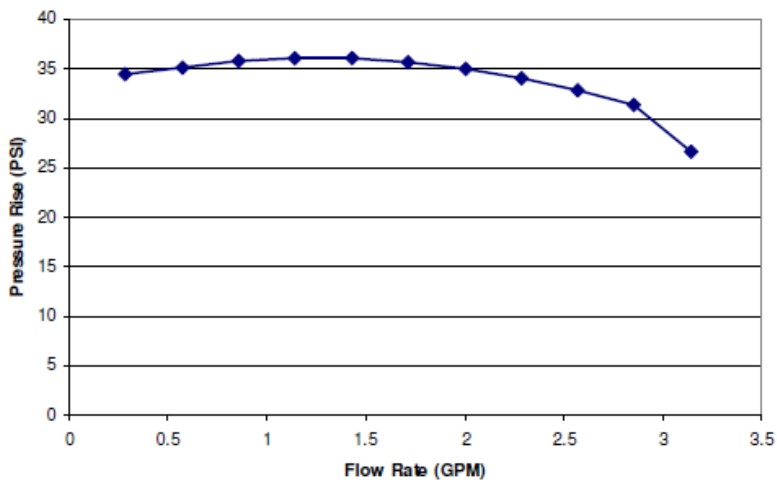

Figure 3-1 BNLNG-01B-000 Head/Flow Curve in LN2 at 5192 rpm (based on test results in Methanol)

Manual # BNLNG-01B-M1-_ 6

Barber Nichols Submersible LN2 Pump Curve

http://des-docdb.fnal.gov:8080/cgi-bin/RetrieveFile?docid=2667&version=2&filename=BNLNG-01B-M1-_manual.pdf

2.2 Vessel Shell

The vessel shell is very similar to the one in use on the prototype vessel, which was analyzed in engineering note MD-ENG-099 for both external & internal pressurization. Primary differences are as follows:

- Shorter length
- Fewer penetrations

Both of these factors are a benefit for external/internal pressurization. The design covered in MD-ENG-099 therefore bounds the new imager design.

2.3 Front Cover (C5 Cell)

As indicated in the Section 1.0 above, the front flange used to support the optical window is being designed by Argonne National Laboratory and will be documented separately.

2.4 Back Cover

The new cover primarily differs from the one on the prototype vessel in two important ways:

- It is made from stainless steel rather than aluminum
- It now has several penetrations

UG-34 (Unstayed Flat Heads) for External Pressurization

Calculating required end cover thickness when the bolts do not cause an edge moment

$t = d (CP / SE)^{0.5}$

(Formula is conservative for bolted end covers because it does not include the additional edge moment loading from the bolts)

d = 20 inches, conservatively selected as the o-ring diameter
S = 16,700 psi
E = 1.0, joint efficiency
C = 0.25 attachment factor for bolted flanges
P = 15 psi

$t = 20" * [(0.25 * 15) / (16700 * 1.0)]^{0.5}$
$= 0.300$ inches, which is << the 1.00" cover thickness

UG-34 (Unstayed Flat Heads) for Internal Pressurization

Calculating required end cover thickness when the bolts do not cause an edge moment

$t = d (CP / SE)^{0.5}$

(Formula is conservative for bolted end covers because it does not include the additional edge moment loading from the bolts)

d = 21.25 inches, bolt circle diameter
S = 16,700 psi
E = 1.0, joint efficiency
C = 0.25 attachment factor for bolted flanges
P = 15 psi

$t = 21.25" * [(0.25 * 15) / (16700 * 1.0)]^{0.5}$
$= 0.318$ inches, which is << the 1.00" cover thickness

UG-39 (Openings in Flat Heads)

The penetration layout is shown below:

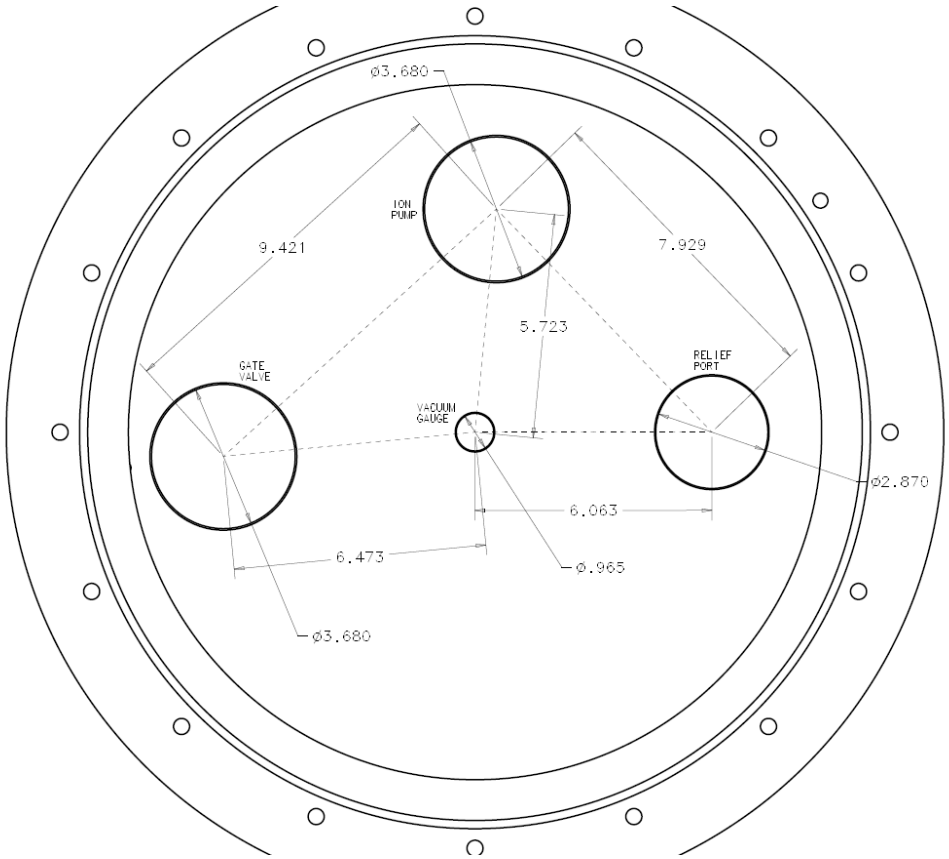

The openings for the ion pump and the gate valve are larger than the 3.5” exclusion size listed in UG-36 (c)(3)(a). The distance between any two hole centers is always larger than the sum of their diameters, so they can be treated individually. The required reinforcement area is determined from UG-39 (b)(1) as follows:

$A_{reinforcement} = 0.5 * d * t + t * tn * (1 – fr1)$

d = 3.68”
t = 0.318” required thickness (from UG-34 above)
tn = 0.083” nozzle wall thickness (gate valve)
= 0.0” nozzle wall thickness (ion pump)
fr1 = 1.0

$A_{reinforcement} = 0.5 * 3.68 * 0.318” = 0.585$ sqin

Since the cover is significantly thicker than ‘t’, this material over and above the requirement can be credited as reinforcement as shown below, assuming material out to a radius of ‘d’ can be credited per Figure UG-37.1.

$$
\begin{aligned}
A_{excess} &= (d - d/2) * (t_{plate} - t) \\
&= (3.68" - 3.68"/2) * (1.00 - 0.318) \\
&= 1.25 \text{ sqin}
\end{aligned}
$$

Since the excess material area is larger than the required reinforcement area, no additional reinforcement material is required.