Fermilab

Particle Physics Division
Mechanical Department Engineering Note

Number: MD-ENG-123 Date: 2 May 2007

Project Internal Reference: Lifting Fixture ID 162

Project: Facility

Title: Rhino Horn for the Allis Chambers Fork Truck

Author(s): Dave Pushka

Reviewer(s): Ang Lee

Key Words: Rhino Horn, Lifting Device, PIT, Fork-Truck, ASME B56.1, In-House Designed Tool

Abstract Summary: A Rhino Horn is a lifting device designed to allow a fork truck to lift a concrete shielding block from the side. This is the preferred means to move a shielding block when an overhead crane is not available. Rhino horns are not commercially produced because of the lack of radiation shielding blocks in industry.
Two rhino horns were previously fabricated and used at Fermilab. One broke in April 2007. This note addresses the design of a replacement rhino horn.

Applicable Codes:	ASME B56.1, the Safety Standard For Low Lift and High Lift Trucks. Paragraphs 7.5.9 and section 7.26 provide requirements specific to the attachments. ASME B56.11.4 Hook-type Forks and Fork Carriers for Powered Industrial Forklift Trucks is likely a relevant standard although it is not available at the Fermilab Library and therefore was not used in this engineering note. Interpretation 1-42 for ASME B56.1 issued in May of 1995 confirms that the fork truck tine shall have a factor of safety or 3 on the yield strength of the fork tine. This value is consistent with B20.30, the Below-the-Hook lifting device and is used as the key requirement in the design of this rhino horn.
Material:	This device has been designed with sufficient material to keep the peak stresses below 1/3 Fy (Fy is the yield stress) for low alloy carbon steel. Low alloy carbon steel (such as A36 or ANSI 1018) is the most ductile of the steels and if the rhino horn is overloaded, the material should yield (bend) to provide visual indication to the user that the load capacity has been exceeded. High strength alloy steel would not yield until the stresses neared the ultimate stress (breaking stress) of the steel. A high strength alloy steel would be more prone to fail by a sudden fracture, with little warning to the fork truck operator. This is deemed to be less desirable than using the low strength alloys material.

~~BELOW-THE-HOOK~~ LIFTING DEVICE

Engineering Note Cover Page

Lifting Device Numbers:

FNAL Site No/ _____ Div. Specific No. PPD ID 162 Asset No. _____

If applicable If applicable If applicable

ASME B30.20 Group: (check one)

[√] Group I Structural and Mechanical Lifting Devices
[ ] Group II Vacuum Lifting Devices
[ ] Group III Magnets, Close Proximity Operated
[ ] Group IV Magnets, Remote Operated

Device Name or Description Rhino Horn for the Allis Chambers FL-120 -24 fork truck

Device was (check all applicable)

[ ] Purchased from a Commercial Lifting Device Manufacturer. Mfg Name _____
[√] Designed and Built at Fermilab Drawing 9210.300-ME-444595
[ ] Designed by Fermilab and Built by a Vendor. Assy drawing number _____
[ ] Provided by a User or other Laboratory
[ ] Other: Describe _____

Engineering Note Prepared by Dave Pushka Date 2 May, 2007

Engineering Note Reviewed by _____ Date _____

Lifting Device Data:

Capacity 10,200 pounds (weight of one 3′ by 3′ by 7.5′ shield block)

Fixture Weight 178 pounds

Service: [√] normal [ ] heavy [ ] severe (refer to B30.20 for definitions)

Duty Cycle ____n/a___ 8, 16 or 24 hour rating (applicable to groups III, and IV)

Inspections Frequency _____

Rated Load Test by FNAL (if applicable) Date _____ Load _____

[ ] Check if Load Test was by Vendor and attach the certificate

Satisfactory Load Test Witnessed by: _____

Signature (of Load Test Witness) _____

Notes or Special Information:

This is an attachment for the Allis Chambers 12,000 pound (6 ton) capacity fork truck (model FL120-24) with the FNAL property ID 10207. This device shall not be used with another fork truck without engineering analysis.

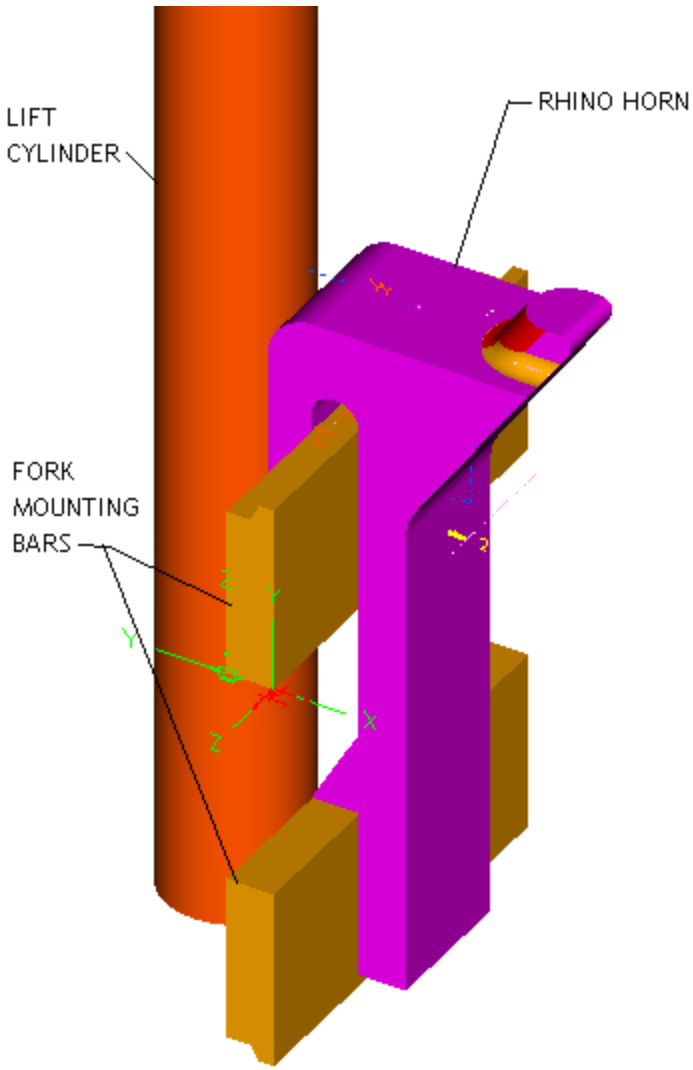

Figure 1
Rhino Horn Shown Mounted on the Fork Mounting Bars of the Allis Chamber Fork Truck Model FL120-24, FNAL ID 10207.

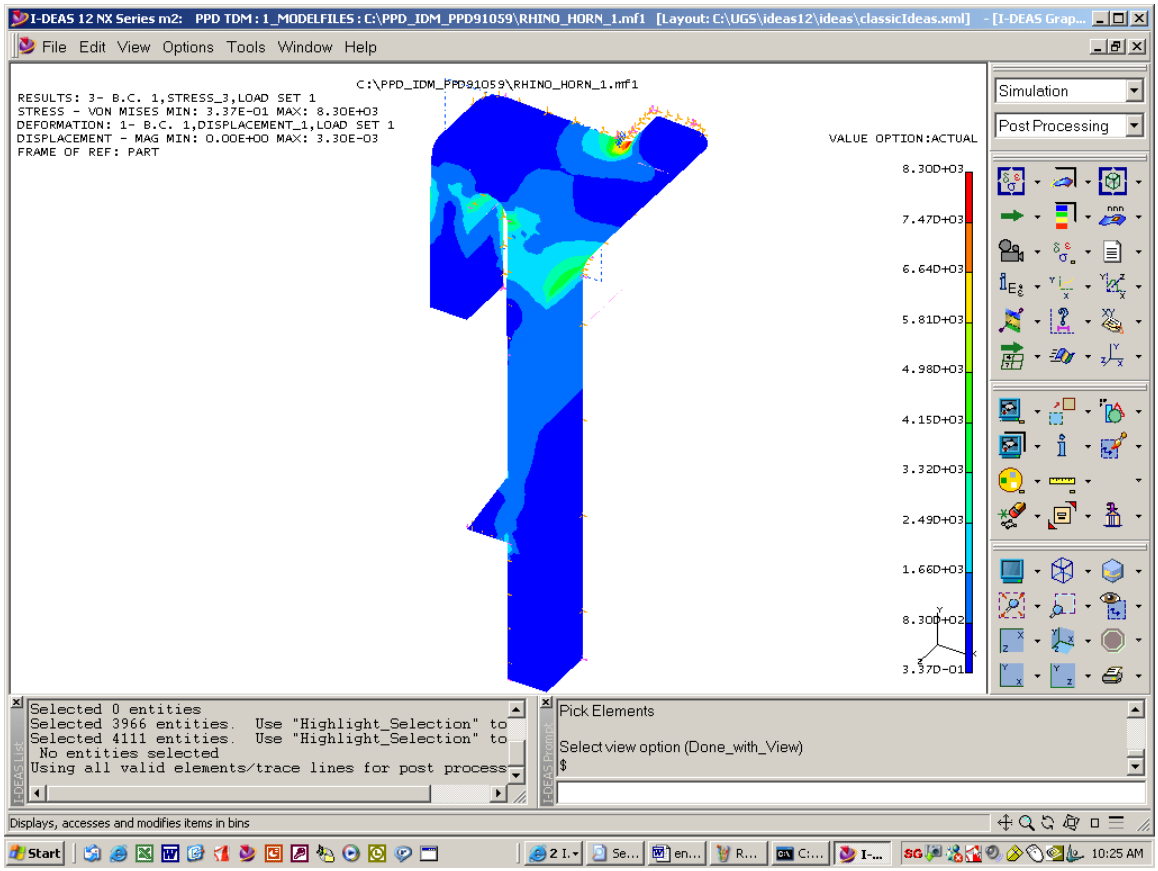

Figure 2
Finite Element Post Processing Image of the Rhino Horn

This model uses one half of the part and takes advantage of the symmetric boundary condition at the centerline. The weight of the shielding block is applied as a pressure over the surface where contact occurs. The magnitude of this pressure over the area is 6500 pounds (for the half model). This equates to a reaction of 13,000 pounds. See the free body hand sketch for this determination.

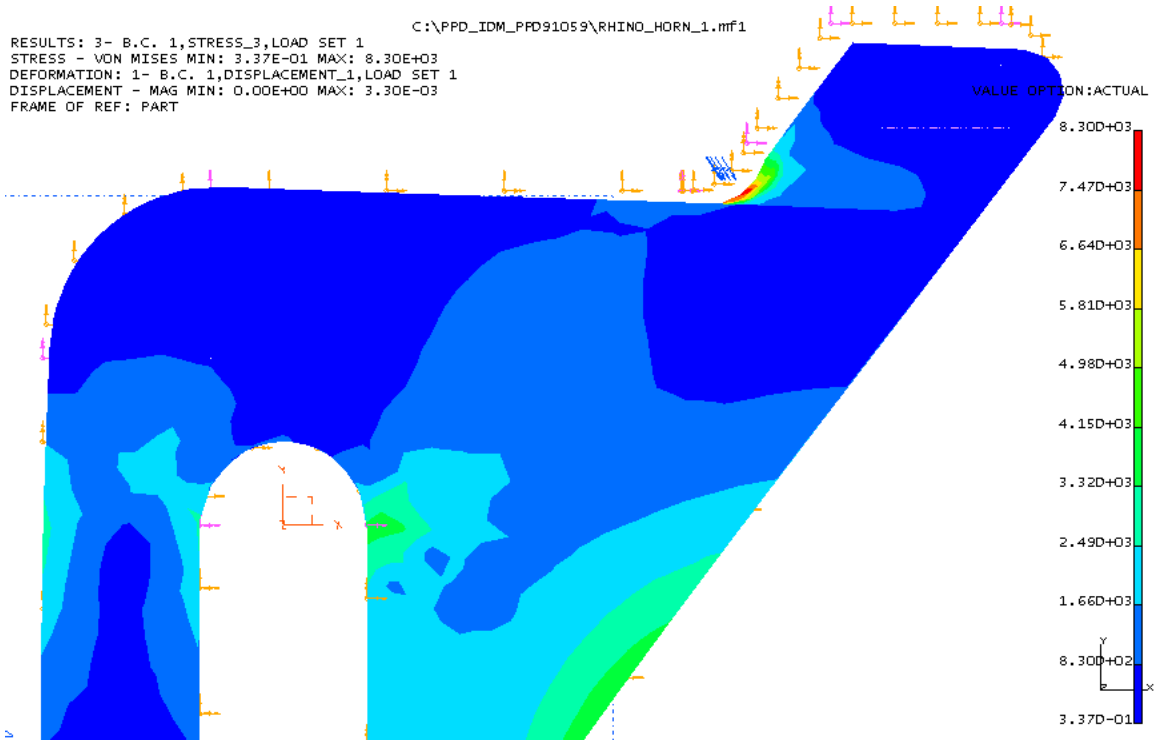

Figure 3
Detail of the FEA results.

Maximum deflection is 0.003 inches
Load is based on one 10,200 pound shielding block
Peak stress is a bearing stress at the contact area from the concrete block embedded anchor and is about 8300 psi.

A purchase requisition has been written to purchase A36 steel material with appropriate certificates of conformance. A36 steel has a minimum yield point of 36,000 psi. Therefore, the maximum allowable stress on this Rhino horn would be 1/3 of this value or 12,000 psi. Calculated peak stress is 8300 psi. Normally, the peak local stresses are not compared to the allowable stress, but in this case, the simple comparison shows the fixture is satisfactory.

FERMILAB ENGINEERING NOTE	SECTION	PROJECT	SERIAL-CATEGORY	PAGE
	PPD/MD	FACILITY		

SUBJECT: RHINO HORN - D BLOCK F.B.D.

NAME: DAVE PUSHKA

DATE: 4/18/07

REVISION DATE:

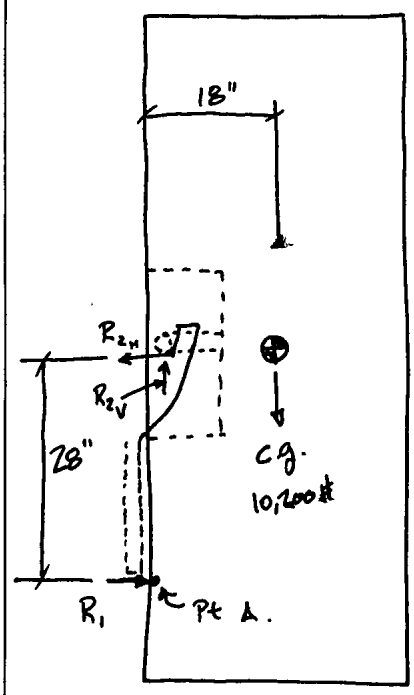

$$\Sigma M_A = 0 = (-18 \cdot 10{,}200) + 28 \cdot R_2$$

$R_{2_H} = 6557\#$ HORIZONTAL

$$\Sigma F_{VERT} = 0 = R_{2_V} - 10{,}200\#$$

$R_{2_{VERTICAL}} = 10{,}200\#$

Σ FORCES ON THE PIN:

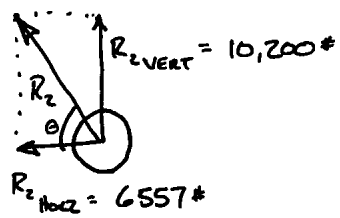

$$\text{RESULTANT}, R_2 = (R_{2V}^2 + R_{2H}^2)^{1/2} = (6557^2 + 10{,}200^2)^{1/2} = 12{,}125\#$$

$$\theta \Rightarrow \tan\theta = \frac{10{,}200}{6557} \therefore \theta = 57.2°$$

$\therefore$ AN ANGLE OF = 35° PUTS THE PIN SURFACE NORMAL TO THE BEARING SURFACE ON THE RHINO HORN.

USE A VALUE OF 6500# AS THE LOAD ON THE HALF MODEL.

Free Body Diagram Used to Determine the Load on the Rhino Horn from a Shielding Block