Fermilab

Particle Physics Division

Mechanical Department Engineering Note

Number_____MD-ENG-177 Date: 01/09/2009
Project_____CDMS
Project Internal Reference:__DRWG # 3891.453-MD-466295
Title_____PRINCETON FRIDG BATH VESSEL
Author(s) _____E.M. VILLEGAS
Reviewer(s)_____ BobWands RWW
Key Words_____HELIUM, PRESSURE, TEMPERATURE

Abstract/Summary: THE PRINCETON FRIDG BATH IS AN EXISTING VESSEL CONSISTING OF FIVE WELDED COMPONENTS: (1) SAFETY FLANGE, (2) UPPER VESSEL, (3) MIDDLE VESSEL, (4) BOTTOM VESSEL_1 AND (5) BOTTOM_VESSEL_2

DEPENDING ON OPERATING MODE, BOTTOM VESSELS ARE INTERCHANGEABLE.

ALL MATERIAL IS SST T304 (18-8)

THE ASSEMBLY IS FILLED WITH LIQUID HELIUM AND OPERATES WITHIN A 20 PSIA PRESSURE AND AT A TEMPERATURE RANGE OF 80F (300K) TO -459F (0K)

THE SAFETY FLANGE IS DESIGN SO THAT THE HELIUM WILL EXHAUST IF THE PRESSURE EXCEEDS 5 PSIG.

Applicable Codes: ES&H MANUAL CHAPTERS 5031 AND 5031TA
2007ASME SECT VIII, DIV. 1 AND SECT II, PART D

FERMILAB
ENGINEERING NOTE

SECTION	PROJECT	SERIAL-CATEGORY	PAGE
			1

SUBJECT: CHECK FABRICATED VESSELS WALL THICKNESS PER ASME CODE 2007, SECT VIII, DIV. I, SECT II, PART D AND ES&H MANUAL, CHAPTER 5031 TA

NAME: E.M. Allegan

DATE: 06/18/09

REVISION DATE:

MATERIAL, SST T-304 (18-8)
OPERATING TEMP −80°F TO −459°F
WORKING INTERNAL PRESS − 20 PSIA, TEST INTERNAL PRESS − 1.3×20 = 26 PSIA

UPPER VESSEL

TUBE 10"φ × .022 WALL × 33.418" LG.

$$t = \frac{PR}{SE - .6P}$$

where $P = 26$ PSIA (TEST PRESS)
$R = 4.4978$ (INSIDE RAD)
$S = 20 \times 10^3 \times .8 = 16 \times 10^3$ psi (SECT II, PART D PAGE 88, LINE 36 & 5031 TA)
$E = .55$ (UW-18, Pg 130)

$$= \frac{26 \times 4.4978}{16 \times 10^3 \times .55 - .6 \times 26}$$

$= .013$" WALL < .022" GIVEN

MIDDLE VESSEL

TUBE 12.962"φ × .075" WALL × 29.315 LG.

$$t = \frac{26 \times 6.406}{16 \times 10^3 \times .55 - .6 \times 26}$$

$= .019$" WALL < .075 GIVEN

BOTTOM #1 VESSEL

TUBE 9.875"φ × .312 WALL × 19.375 LG.

$$t = \frac{26 \times 4.625}{16 \times 10^3 \times .55 - .6 \times 26}$$

$= .014$" WALL < .312" GIVEN

BOTTOM #2 VESSEL

TUBE 3.482 × .125 × 9.095

$$t = \frac{26 \times 1.616}{16 \times 10^3 \times .55 - .6 \times 26}$$

$= .005$" WALL < .125" GIVEN

FERMILAB
ENGINEERING NOTE

SECTION	PROJECT	SERIAL-CATEGORY	PAGE
			2

SUBJECT: DETERMINED COMBINED LOAD (F) ON EACH SCREW

NAME: [illegible]

DATE: 01/08/09 REVISION DATE:

TO COMPRESS INDIUM SEAL

.040" ϕ SEAL COMPRESSED DOWN TO .010 THICK

$$.010\,l = \frac{.040^2\,\pi}{4} \Rightarrow$$

$$l = .126$$

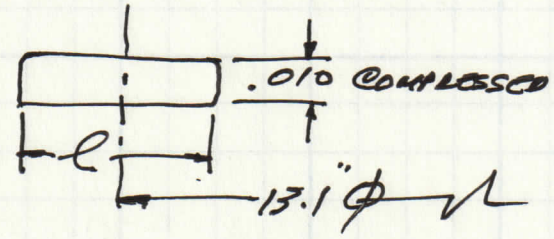

SINCE INDIUM COMPRESSIVE STRENGTH IS 310 PSI & THE NOMINAL RING DIAMETER IS 13.1", THE FORCE REQ'D PER SCREW IS:

$$F_{SEAL} = 13.1\,\pi \cdot .126 \times 310/48 \text{ SCREWS}$$

$$= 33.5^{\#} \text{ say } 40^{\#}/\text{SCREW}$$

LOAD CARRIED BY EACH SCREW TO SUSTAIN A TEST PRESSURE OF 26 PSIA ON 13.135 ϕ SURFACE

$$F_{TEST} = \frac{13.135^2\,\pi}{4} \times 26/48$$

$$= 73.4^{\#} \text{ say } 80^{\#}/\text{SCREW}$$

$$F = F_{SEAL} + F_{TEST} = 40 + 80 = 120^{\#}/\text{SCREW}$$

FERMILAB 1/24/87
ENGINEERING NOTE

SECTION	PROJECT	SERIAL-CATEGORY	PAGE
			3

SUBJECT: DESIGN STRESS FOR M6 x 1 SCREW
MATERIAL: SST T-304 (18-8)

NAME: E.M. [illegible]
DATE: 01/08/07
REVISION DATE:

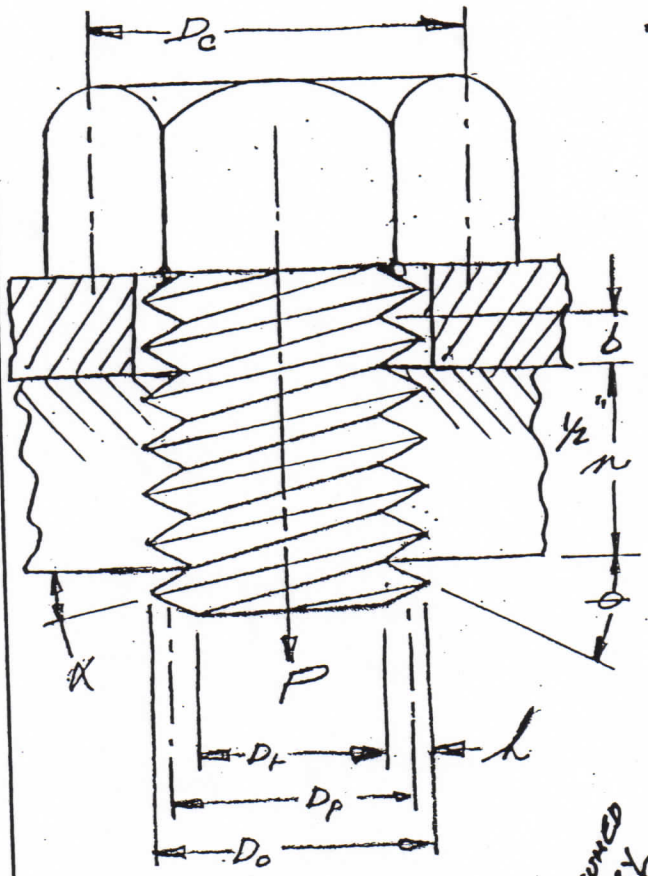

ALLOWABLE STRESS
$F = 18.8 \times 10^3 \times 0.8 = 15{,}040$ psi
(PER ASME 2007, SECT II, PART D Pg 356, LINE 20 & ES&H 5031TA)

① $F_{SEAL} = 40^{\#}$ (SEE Pg #2) REQ'D TO COMPRESS SEAL

① $F = F_{SEAL} + F_{PRESSURE} = 40 + 80 = 120^{\#}$ (SEE Pg #1)

② $D_c = .3150$
$D_o = .2352$

③ $D_p = .2096$
$D_r = .1926$ EXT.
$p = .03937$
$h = .0213$ EXT

④ $\alpha = 3.4216^\circ$ ($\tan^{-1}\alpha = \left(\frac{p}{D_p \pi}\right)$)

⑤ $\theta = 30^\circ$
$b = .0344\left(p - \frac{p}{8}\right)$

ASSUMED DRY:
⑥ $f = .74$ (SCR. & TAPPED HOLE, STATIC,
⑦ $f_c = .74$ (COLLAR, STATIC,
$n = 12$ (# LOAD CARRING THREADS)

$$T = F\left[\frac{D_p}{2}\left(\frac{\tan\alpha + f/\cos\theta}{1 - f\tan\alpha/\cos\theta}\right) + \frac{f_c D_c}{2}\right]$$

$= 26.1$ IN-LB say 30 IN-LB

$$f_b = \frac{3Fh}{\pi n D_o b^2} = 792 \text{ psi}$$ (TH'D. BENDING STRESS)

$$f_v = \frac{F}{\pi n D_o b} = 426 \text{ psi}$$ (TH'D SHEARING STRESS)

$$f_{VT} = \frac{16T}{\pi D_r^3} = 21.4 \times 10^3 \text{ psi}$$ (TORSIONAL SHEAR ON ROOT CYL
(NOTE: THIS STRESS IS SEEN ONLY AT ASSY. & NOT WHILE IN OPERATION

$$f_a = \frac{4F}{\pi D_r^2} = 4.5 \times 10^3 \text{ psi}$$ (AXIAL STRESS ON ROOT CYL.

FERMILAB
ENGINEERING NOTE

SECTION	PROJECT	SERIAL-CATEGORY	PAGE
			4

SUBJECT: DETERMINE WELD [illegible]

NAME: [illegible]

ASME 2007, SECT VIII, DIV. I, UG-100 & UW-18

DATE: 01/09/09 REVISION DATE: 06/17/09

CALCULATE LOAD (f_w/IN) ON SMALLEST FILLET WELD ON 9.957" I.D. x .022 WALL TUBE WHEN SUBJECTED TO A TEST PRESSURE OF 1.3 x 20 PSIA ACTING ON 13.135 ϕ SURFACE.

$$f_w = \frac{13.135^2 \pi}{4} \times 1.3 \times 20 \times \frac{20K}{20K} / 9.957 \pi .55$$

$$= 205 \#/IN \text{ (TEST PRESSURE LOAD)}$$

$$F_w = \sin 45 w S$$

where F_w = ALLOWABLE FORCE
w = LEG SIZE (.022)
$S = 20 \times 10^3 \times 0.8$
$= 16 \times 10^3$ psi

$$= 249 \#/IN > f_w = 205 \#/IN$$

(ASME 2007, SECT II, PART D, Pg 88, LINE 36 & ES&H MANUAL CHAPTER 5031TA)

I-DEAS 12 NX Series m2: I-DEAS Visualizer

PRINCETON_FRIDG_BATH_W-V1_FEM
V1_26LB_INTERNAL_MINUS_459F
STRESS Von Mises Averaged Top shell
Min: 2.36E+01 lbf/in^2 Max: 6.97E+03 lbf/in^2
B.C. 1,DISPLACEMENT_1,LOAD SET 1
DISPLACEMENT XYZ Magnitude
Min: 5.59E-05 in Max: 2.18E-01 in

MATERIAL : SST T-304 (18-8)

ALLOWABLE STRESS : S = 20E3 X 0.8 = 16E3 PSI
(PER 2007 ASME CODE, SECT II, PART D, TABLE 1A, PG 88, LINE 36
AND ES&H MANUAL CHAPTER 5031TA)

OPERATING TEMPERATURE : 80F (300K) TO -459F (0 K)

OPERATING PRESSURE : 20 PSIA

PNEUMATIC INTERNAL TEST PRESSURE : 20 X 1.3 = 26 PSIA
(PER 2007 ASME CODE, SECT VIII, DIV 1, UG-100b)

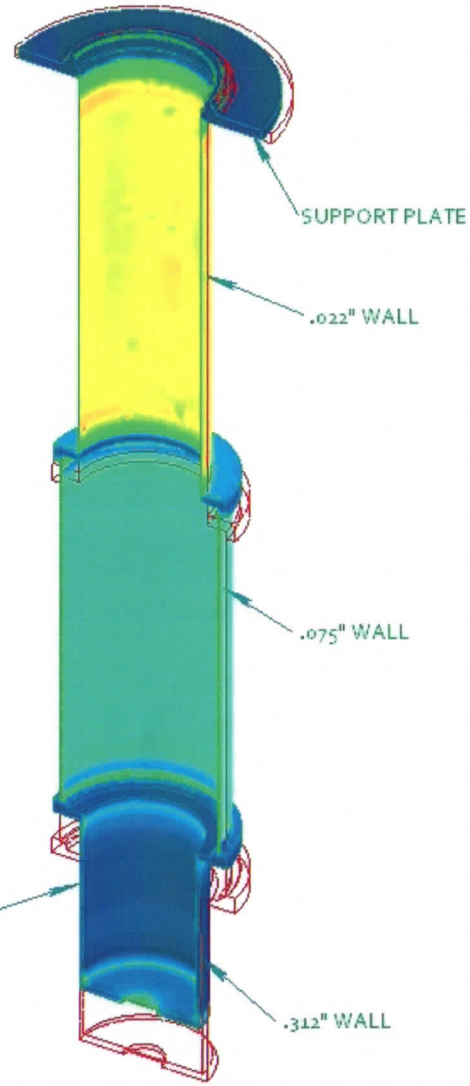

NOTE:
BOTTOM VESSEL_1 IS USED IN
THIS ANALYSIS

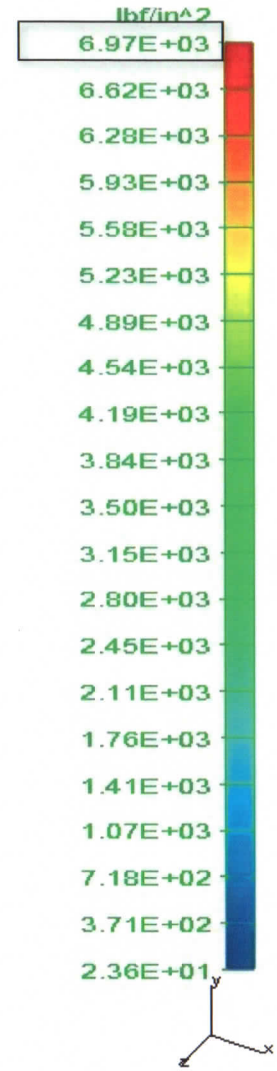

I-DEAS 12 NX Series m2: I-DEAS Visualizer

PRINCETON_FRIDG_BATH_W-V2_FEM
V2_26INTERNAL_MINUS459F
STRESS Von Mises Averaged Top shell
Min: 3.25E+01 lbf/in^2 Max: 6.88E+03 lbf/in^2
B.C. 1,DISPLACEMENT_1,LOAD SET 1
DISPLACEMENT XYZ Magnitude
Min: 7.66E-09 in Max: 2.00E-01 in

MATERIAL : SST T-304 (18-8)

ALLOWBLE STRESS : S = 20e3 X 0.8 = 16e3 PSI
(PER 2007 ASME CODE, SET II, PART D, TABLE 1A, PG 88, LINE 36
AND ES&H MANUAL CHAPTER 5031TA)

OPERATING TEMPERATURE : 80F (300K) TO -459F (0 K)

OPERATING PRESSURE : 20 PSIA

PNEUMATIC INTERNAL TEST PRESSURE : 20 X 1.3 = 26 PSIA
(PER ASME 2007 CODE, SECT VIII, DIV. 1, UG-100b

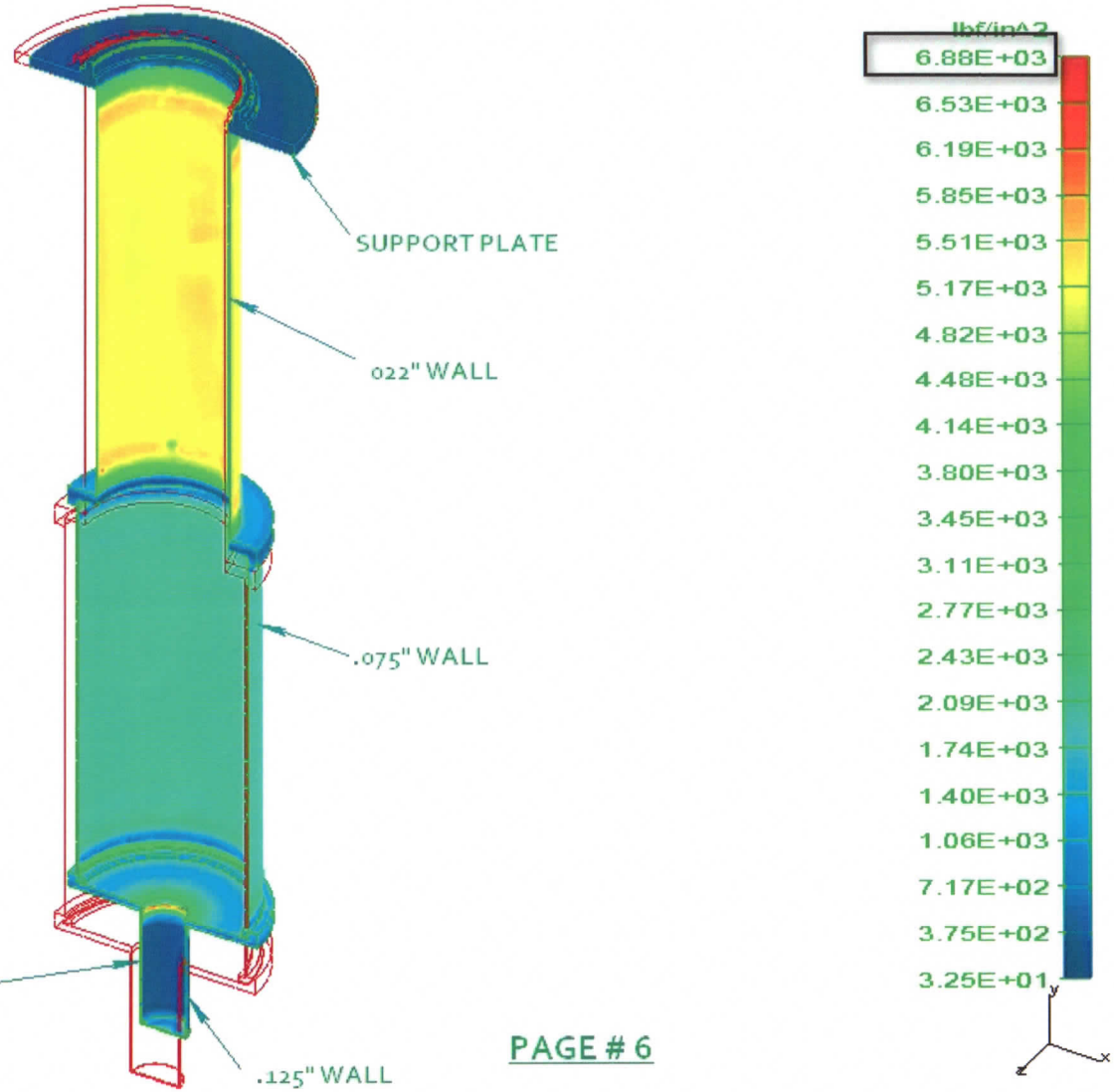

NOTE:
BOTTOM VESSEL IS USE
IN THIS ANALYSIS

Socket Cap Screws

Part Number: **91292A141** $8.24 per Pack of 25

Head Style	Standard
Standard Head Style	Standard
Material Type	Stainless Steel
Finish	Plain
Class	Not Rated
Stainless Steel Type	18-8 Stainless Steel
Drive Style	Hex Socket
Metric Thread Size	M6
Metric Thread Pitch	1 mm
Length	35 mm
Thread Length	Partially Threaded
Thread Direction	Right Handed
Tip Type	Plain
Self-Locking Method	None
Screw Quantity	Individual Screw
Hex Size	5 mm
Head Diameter	10 mm
Head Height	6 mm
Rockwell Hardness	Not Rated
Minimum Tensile Strength	101,000 psi
Thread Fit	Class 6g
Specifications Met	Deutsche Industrie Normen (DIN)
DIN Specification	DIN 912-A2

ALLOWABLE STRESS

$F = 18.8 \times 10^3 \times 0.8 = 15{,}040$ psi

(PER 2007 ASME, SECT II, PART D Pg 356, LINE 20, & ES&H MANUAL CHAPTER 5031TA)

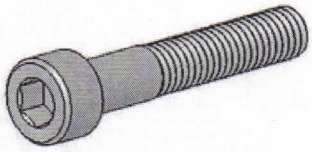

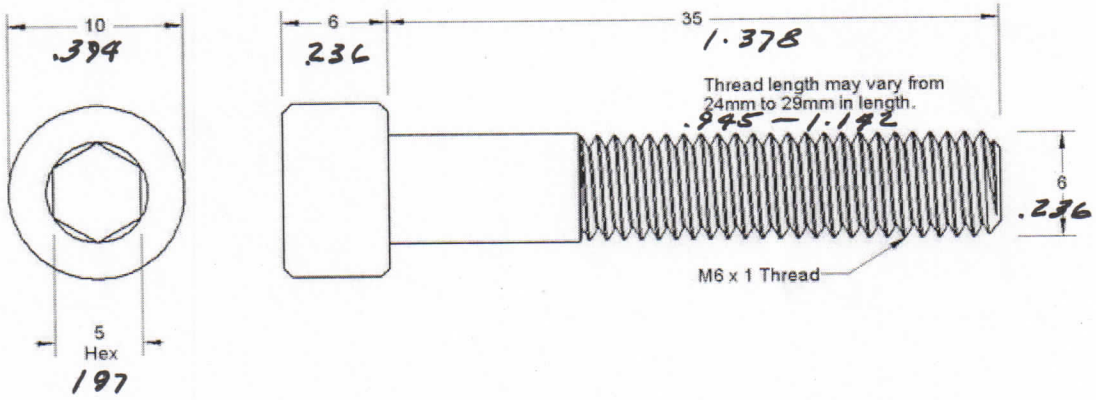

McMASTER-CARR CAD PART NUMBER 91292A141

http://www.mcmaster.com

© 2008 McMaster-Carr Supply Company

18-8 Stainless Steel Socket Head Cap Screw

Unless otherwise specified, dimensions are in millimeters. Information in this drawing is provided for reference only.

Fermilab

Date: 06/17/09

EXHIBIT B
Pressure Testing Permit*

Type of Test: [ ] Hydrostatic [X] Pneumatic

Test Pressure 6.5 psig **Maximum Allowable Working Pressure** 5 psig

Items to be Tested

Location of Test _____ **Date and Time** _____

Hazards Involved

Safety Precautions Taken

Special Conditions or Requirements

Qualified Person and Test Coordinator _____
Dept/Date _____

Division/Section Safety Officer _____
Dept/Date _____

Results

Witness _____ **Dept/Date** _____
(Safety Officer or Designee)

* Must be signed by division/section safety officer prior to conducting test. It is the responsibility of the test coordinator to obtain signatures.